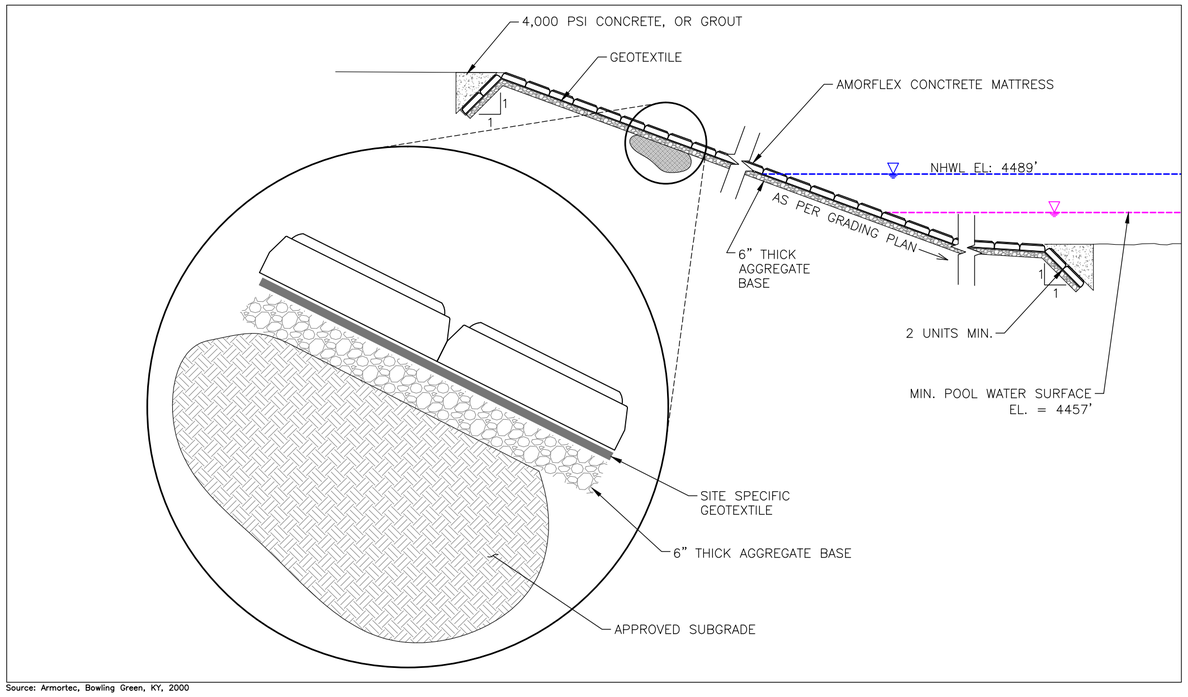

Source: Armortec, Bowling Green, KY, 2000

1 BOAT RAMP DETAIL
SCALE: NONE

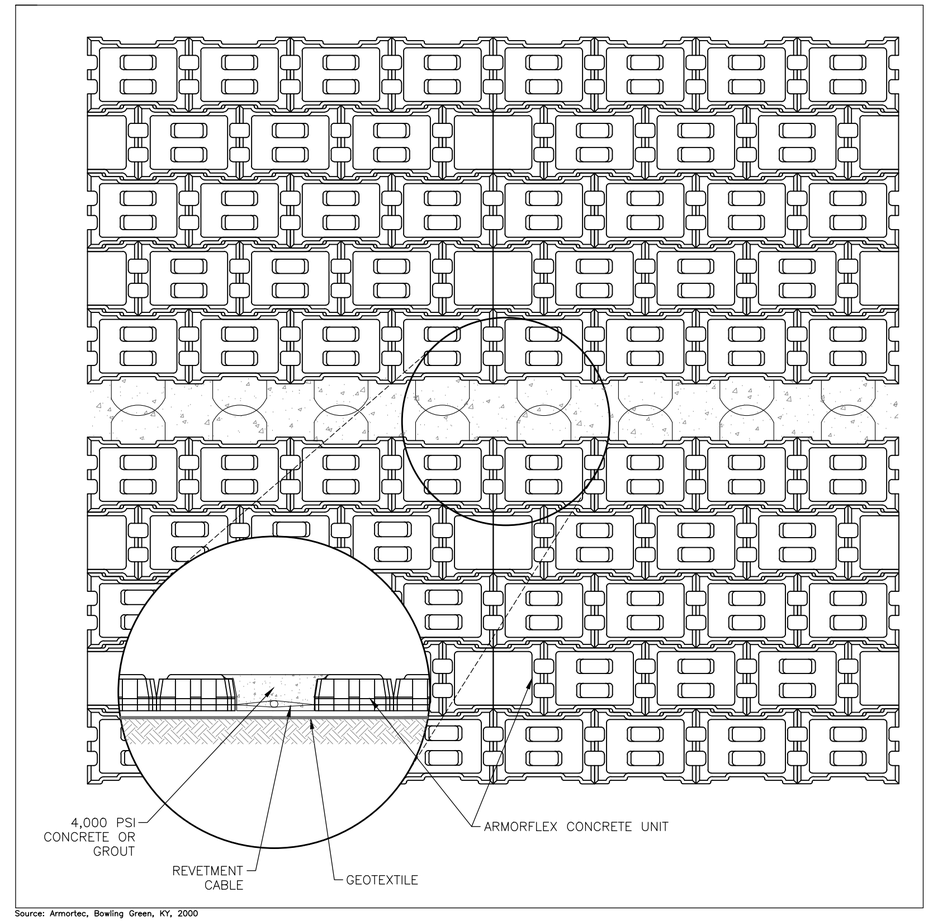

Source: Armortec, Bowling Green, KY, 2000

3 ARTICULATED CONCRETE MAT GROUT DETAIL
SCALE: NONE

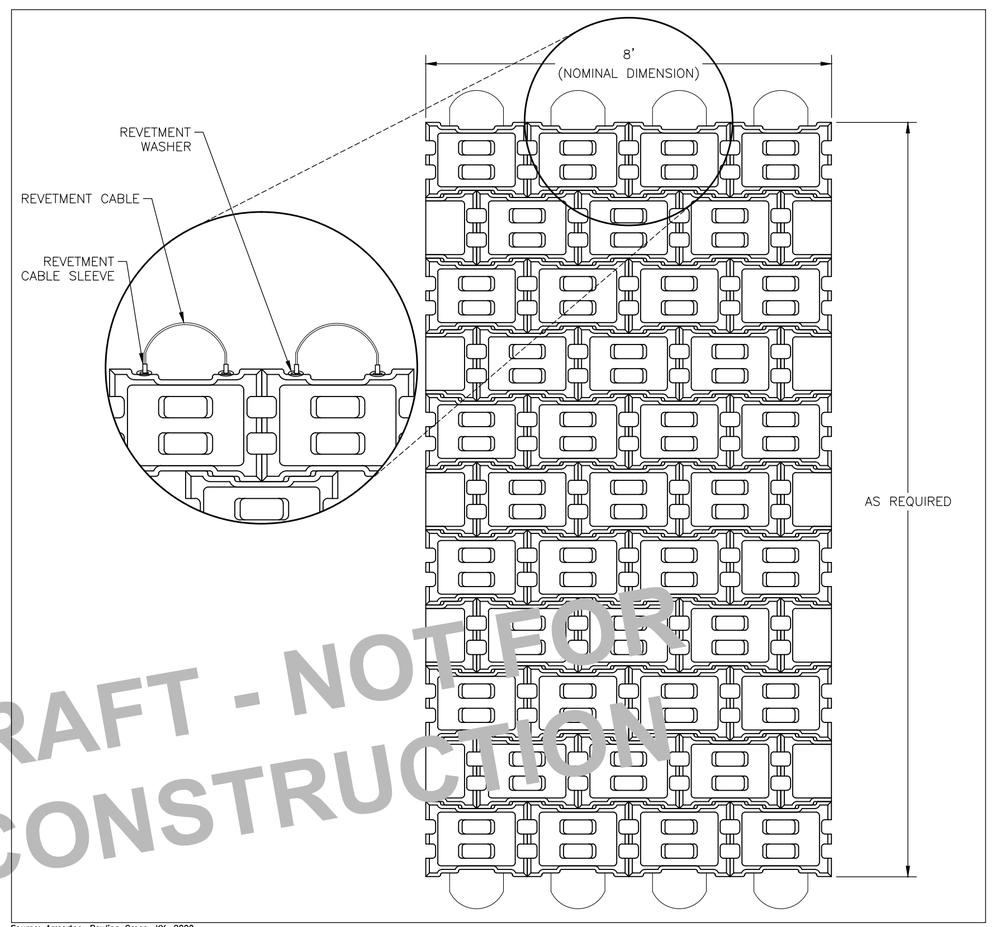

Source: Armortec, Bowling Green, KY, 2000

2 TYPICAL ARTICULATED CONCRETE MAT
SCALE: NONE

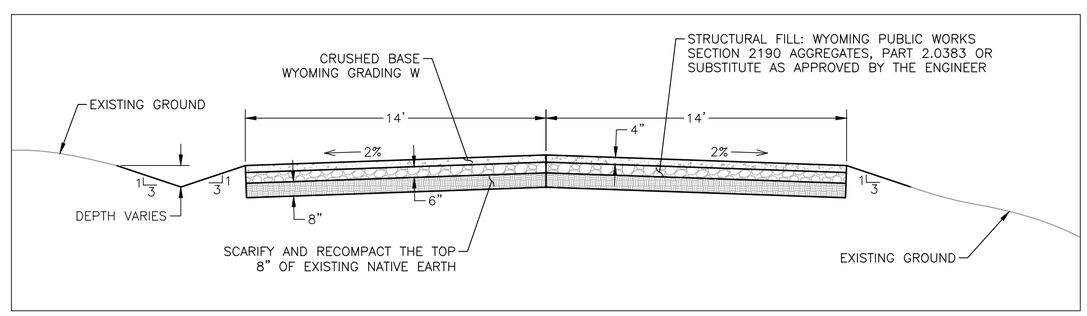

A PRIMARY ACCESS ROAD TYPICAL CROSS SECTION
SCALE 1" = 5'

0 5' 10'

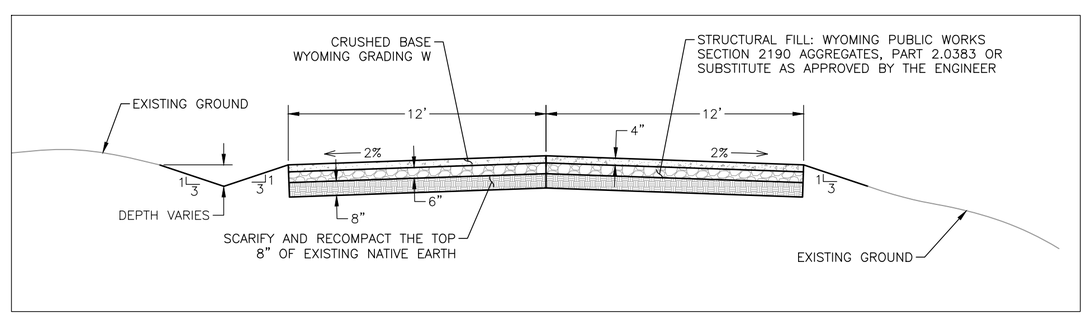

B SECONDARY ACCESS ROAD TYPICAL CROSS SECTION
SCALE 1" = 5'

0 5' 10'

DRAFT - NOT FOR CONSTRUCTION

REV.	DATE	DESCRIPTION	BY	CHK'D
C	2/2/17	BLM POD SUBMITTAL	PC	DRT
B	12/31/15	FINAL LEVEL II PHASE II REPORT	PC	DRT
A	7/14/15	DRAFT LEVEL II PHASE II REPORT	PC	DRT

REVISIONS

WARNING
IF THIS BAR DOES NOT MEASURE 1" IN LENGTH THEN DRAWING IS NOT AT INTENDED SCALE

DRAWN BY: PC
CHECKED BY: DRT
DATE: 2/2/2017
SCALE: AS SHOWN
FILE: 06N-AC-BOATRAMP-DIV201505

Trihydro CORPORATION
1252 Commerce Drive
Laramie, Wyoming 82070
www.trihydro.com
(P) 307/745.7474 (F) 307/745.7729

ACCESS ROAD AND BOAT RAMP DETAILS
ALKALI CREEK RESERVOIR

NOWOOD RIVER STORAGE LEVEL II, PHASE II STUDY
WYOMING WATER DEVELOPMENT COMMISSION
BIG HORN COUNTY, WYOMING

SHEET 14
14 OF 21
REV: C