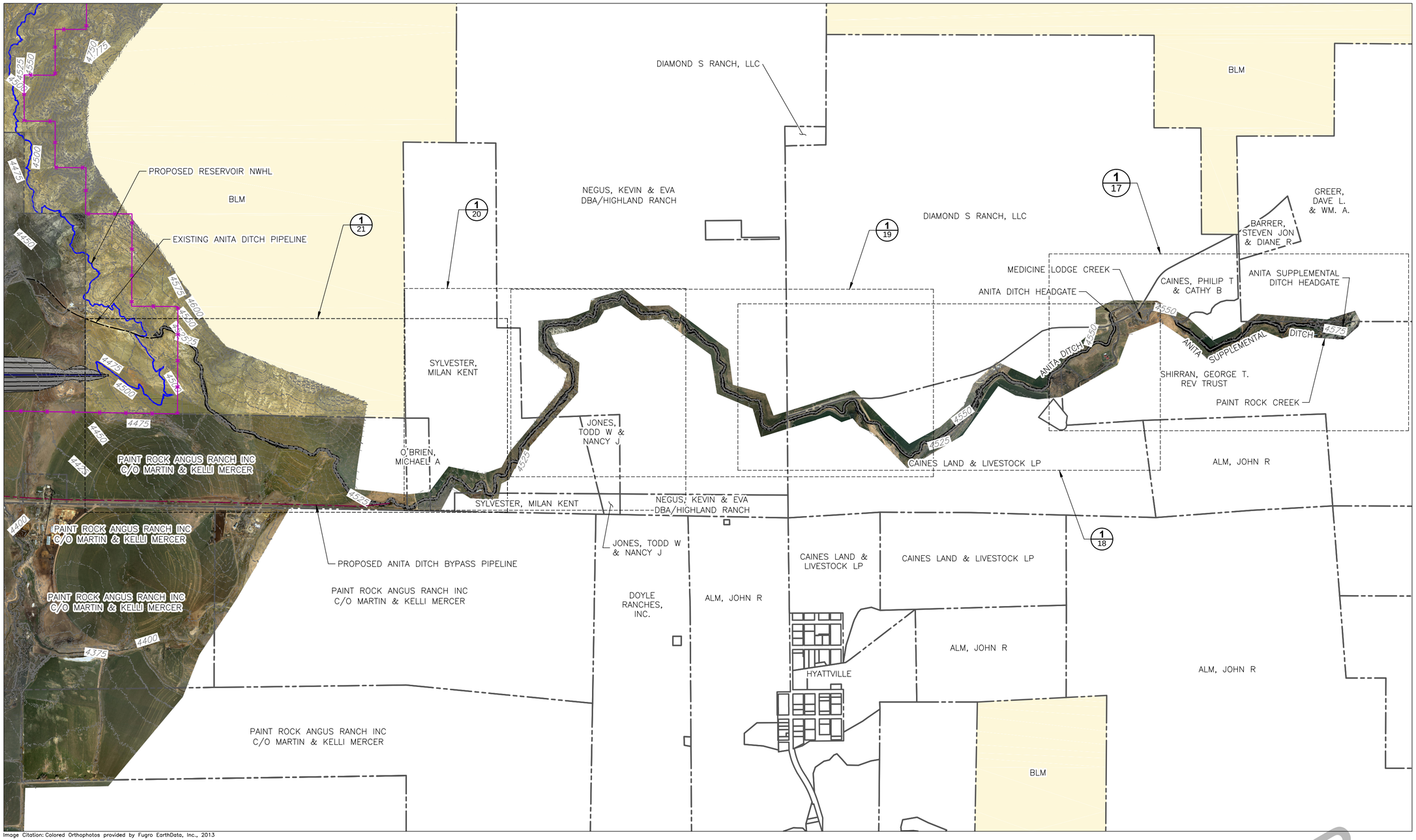

Image Citation: Colored Orthophotos provided by Fugro EarthData, Inc., 2013

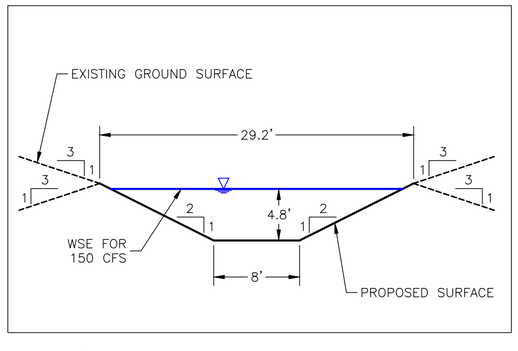

A ANITA DITCH TYPICAL SECTION
SCALE: 1" = 10'

0 10' 20'

N

0 1,000' 2,000'

DRAFT - NOT FOR CONSTRUCTION

REV.	DATE	DESCRIPTION	BY	CHK'D
C	2/2/17	BLM POD SUBMITTAL	PC	DRT
B	12/31/15	FINAL LEVEL II PHASE II REPORT	PC	DRT
A	7/14/15	DRAFT LEVEL II PHASE II REPORT	PC	DRT

REVISIONS

WARNING
IF THIS BAR DOES NOT MEASURE 1" IN LENGTH THEN DRAWING IS NOT AT INTENDED SCALE

DRAWN BY: PC
CHECKED BY: DRT
DATE: 2/2/2017
SCALE: AS SHOWN
FILE: 06N-AC-ANITADITCH201507

Trihydro CORPORATION
1252 Commerce Drive
Laramie, Wyoming 82070
www.trihydro.com
(P) 307/745.7474 (F) 307/745.7729

ANITA DITCH SITE MAP
ALKALI CREEK RESERVOIR

NOWOOD RIVER STORAGE LEVEL II, PHASE II STUDY
WYOMING WATER DEVELOPMENT COMMISSION
BIG HORN COUNTY, WYOMING

SHEET **16**
16 OF 21

REV: **C**

M:\GIS\STATE\WYOMINGTRIBU\PROJECT\ALKALI_CREEK\PLANSET\AC-ANITADITCH201507