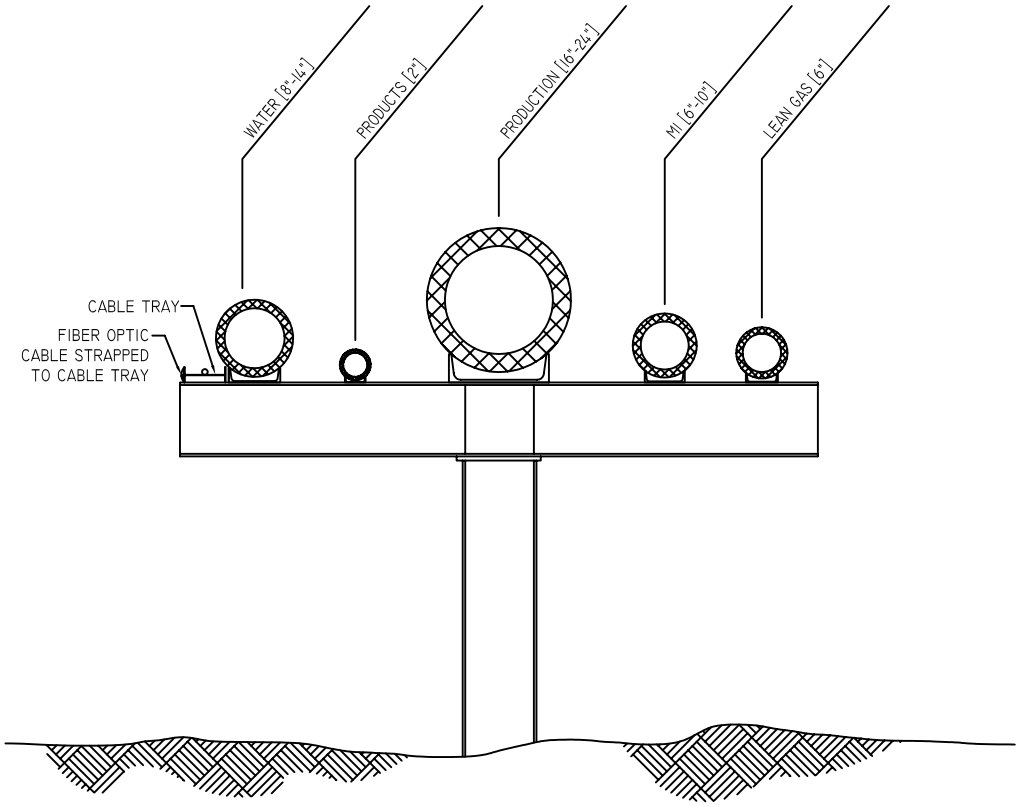

CD-3 TYPICAL SECTION

Prepared by:
PND Incorporated, January 2004
Modified by:
MACTEC E&C, May 2004

Figure 2.3.2.1-3
Pipeline/VSM Cross Section
CD-3 to Alpine