U.S. Department of the Interior
Bureau of Land Management
Wyoming State Office

Rawlins Field Office

September 2001

ENVIRONMENTAL ASSESSMENT for the Atlantic Rim Coalbed Methane Project, Sun Dog Pod, Carbon County, Wyoming

United States Department of the Interior

BUREAU OF LAND MANAGEMENT
Rawlins Field Office
1300 North Third Street
P.O. Box 2407
Rawlins, Wyoming 82301-2407

In Reply Refer To:
1790

September 21, 2001

Re: Sun Dog Pod Environmental Assessment

Dear Reader:

Enclosed, for your review and comment, is the Environmental Assessment (EA) for Petroleum Development Corporation's Sun Dog Pod coalbed methane exploration project. The project is located in one of nine areas proposed for interim drilling to provide information for use in the preparation of the Atlantic Rim Coalbed Methane Project Environmental Impact Statement. In order to satisfy the requirements of the National Environmental Policy Act, this EA was prepared to analyze impacts associated with the exploration of coalbed methane resources northeast of Baggs, in Carbon County, Wyoming.

Analysis of the environmental consequences has led to the determination that this proposed project, with the appropriate mitigating measures, will not have a significant effect on the human environment. Therefore, an Environmental Impact Statement will not be required. Pending the results of a public review of this document, the Bureau of Land Management (BLM) will prepare a formal Decision Record.

Your comments should be as specific as possible. Comments on the alternatives presented and on the adequacy of the impact analysis will be accepted by BLM until October 22, 2001. If problems arise with the placement of the document on the Wyoming BLM website, comments will be taken for a full 30-day period after the document is available on the web.

Comments may be submitted via regular mail to:

Brenda Vosika Neuman, Project Manager
Bureau of Land Management
Rawlins Field Office
P.0. Box 2407
1300 North Third Street
Rawlins, Wyoming 82301

or be submitted electronically (please refer to the Sun Dog Pod CBM Project) at:

e-mail: rawlins_wymail@blm.gov

Please note that comments, including names, e-mail addresses, and street addresses of the respondents, will be available for public review and disclosure at the above address during regular business hours (7:45 a.m. to 4:30 p.m.), Monday through Friday, except holidays. Individual respondents may request confidentially. If you wish to withhold your name, e-mail address, or

street address from public review or from disclosure under the Freedom of Information Act, you must state this plainly at the beginning of your written comment. Such requests will be honored to the extent allowed by law. All submissions from organizations or businesses, and from individuals identifying themselves as representatives or officials of organizations or businesses, will be made available for public inspection in their entirety.

Please retain this EA for future reference. A copy of the EA has been sent to affected government agencies and to those who responded to scoping or otherwise indicated that they wished to receive a copy of the EA. The EA may also be reviewed at the following locations:

Bureau of Land Management Wyoming State Office 5353 Yellowstone Road Cheyenne, Wyoming 82009	Bureau of Land Management Rawlins District Office 1300 N. Third Street Rawlins, Wyoming 82301

The document can also be viewed at Wyoming Bureau of Land Management homepage at www.wy.blm.gov.

If you require additional information regarding this project, please contact Brenda Vosika Neuman, Project Lead, at the above e-mail, street address, or by phoning (307) 328-4389.

Sincerely,

Acting

Field Manager

Enclosure

MISSION STATEMENT

It is the mission of the Bureau of Land Management to sustain the health, diversity, and productivity of the public lands for the use and enjoyment of present and future generations.

WY-030-EA1-243

BLM/WY/PL-01/022+1310

ATLANTIC RIM COALBED METHANE PROJECT:

SUN DOG POD

ENVIRONMENTAL ASSESSMENT

Prepared by

U.S. Department of the Interior
Bureau of Land Management
Rawlins Field Office
Rawlins, Wyoming

and

Gary Holsan Environmental Planning
Thayne, Wyoming

September, 2001

TABLE OF CONTENTS

ATLANTIC RIM COALBED METHANE PROJECT: SUN DOG POD ENVIRONMENTAL ASSESSMENT
Table of Contents

Page

CHAPTER 1 - PURPOSE AND NEED

1.0 INTRODUCTION 1-1

1.1 DESCRIPTION AND LOCATION 1-1

1.2 PURPOSE OF AND NEED FOR ACTION 1-1
1.2.1 Purpose and Need for the Proposed Development 1-1
1.2.2 Purpose of the Environmental Analysis Process 1-2

1.3 RELATIONSHIP TO POLICIES, PLANS, AND PROGRAMS 1-2
1.3.1 Conformance With Great Divide Resource Area RMP 1-5
1.3.2 Conformance With Interim Drilling Guidelines 1-5
1.3.3 Relationship to Other Plans and Documents 1-5
1.3.4 Issues and Concerns 1-5

CHAPTER 2 - PROPOSED ACTION AND ALTERNATIVES

2.0 PROPOSED ACTION 2-1

2.1 PLAN OF OPERATIONS 2-1
2.1.1 Preconstruction Planning and Site Layout 2-1
2.1.2 Construction and Drilling Phase 2-3
2.1.2.1 Access Road Construction 2-3
2.1.2.2 Well Pad Design and Construction 2-4
2.1.2.3 Drilling and Completion Operations 2-4
2.1.3 Production Operations 2-6
2.1.3.1 Well Production Facilities 2-6
2.1.3.2 Power Generation 2-10
2.1.3.3 Pipelines 2-10
2.1.3.3.1 Gas-Gathering Pipeline Systems 2-10
2.1.3.3.2 Produced Water-Gathering System and Injection Facilities 2-11
2.1.3.3.3 Gas-Delivery Pipelines and Compression 2-11
2.1.4 Ancillary Facilities 2-11
2.1.5 Traffic Estimates and Work Force Loading Schedule 2-15
2.1.6 Site Restoration and Abandonment 2-15
2.1.7 Summary of Estimated Disturbances 2-15
2.1.8 Project-Wide Mitigation Measures and Procedures 2-15
2.1.8.1 Preconstruction Planning and Design Measures 2-15
2.1.8.2 Resource-Specific Requirements 2-18
2.1.8.2.1 Range Resources and Other Land Uses 2-18
2.1.8.2.2 Air Quality 2-18

2.1.8.2.3 Transportation 2-18
2.1.8.2.4 Minerals/Paleontology 2-19
2.1.8.2.5 Soils 2-20
2.1.8.2.6 Water Resources 2-21
2.1.8.2.7 Fisheries 2-22
2.1.8.2.8 Vegetation and Wetlands 2-22
2.1.8.2.9 Wildlife 2-23
2.1.8.2.10 Special Status Species 2-23
2.1.8.2.11 Visual Resources 2-24
2.1.8.2.12 Noise 2-24
2.1.8.2.13 Recreation 2-24
2.1.8.2.14 Socioeconomics 2-24
2.1.8.2.15 Cultural Resources 2-25
2.1.8.2.16 Health and Safety 2-25

2.2 ALTERNATIVE A - NO ACTION 2-26

2.3 ALTERNATIVES CONSIDERED BUT NOT ANALYZED IN DETAIL 2-27

CHAPTER 3 - AFFECTED ENVIRONMENT

3.0 INTRODUCTION 3-1

3.1 GEOLOGY/PALEONTOLOGY 3-2
3.1.1 Geology 3-2
3.1.1.1 Regional Geologic Overview 3-2
3.1.1.2 Mineral Resources 3-3
3.1.1.3 Geologic Hazards 3-3
3.1.2 Paleontology 3-3

3.2 CLIMATE AND AIR QUALITY 3-4
3.2.1 Climate 3-4
3.2.2 Air Quality 3-5

3.3 SOILS 3-7

3.4 WATER RESOURCES 3-8
3.4.1 Surface Water 3-9
3.4.1.1 Quantity 3-9
3.4.1.2 Quality 3-9
3.4.1.3 Waters of the U.S. 3-11
3.4.2 Groundwater 3-12
3.4.2.1 Location and Quantity 3-12
3.4.2.2 Quality 3-14

3.5 VEGETATION 3-17
3.5.1 Introduction 3-17
3.5.2 Vegetation Cover Types 3-17
3.5.3 Threatened and Endangered Species 3-17

TABLE OF CONTENTS

3.5.4 Species of Concern 3-18
3.5.5 Invasive/Noxious Weeds 3-18

3.6 RANGE RESOURCES AND OTHER LAND USES 3-19
3.6.1 Range Resources 3-19
3.6.2 Other Land Uses 3-19

3.7 WILDLIFE/FISHERIES 3-19
3.7.1 General Wildlife 3-19
3.7.2 Big Game 3-20
3.7.3 Upland Game Birds 3-21
3.7.4 Raptors 3-22
3.7.5 Threatened and Endangered Species - Wildlife and Fish 3-22
3.7.6 Species of Concern - Wildlife and Fish 3-24

3.8 RECREATION 3-25

3.9 VISUAL RESOURCES 3-25

3.10 CULTURAL RESOURCES 3-26
3.10.1 Culture Chronology of the Project Area 3-26
3.10.2 Summary of Extant Cultural Resources 3-27
3.10.3 Site Types 3-28
3.10.4 Excavation Data 3-29
3.10.5 Summary 3-29

3.11 SOCIOECONOMICS 3-30
3.11.1 Economic Conditions 3-30
3.11.1.1 Oil and Gas Activity 3-30
3.11.1.2 Economic Activities in the Vicinity of the Proposed Action 3-31
3.11.2 Population 3-31
3.11.3 Temporary Housing Resources 3-31
3.11.3.1 Baggs/Dixon Area 3-31
3.11.3.2 Craig, Colorado 3-32
3.11.3.3 Wamsutter 3-32
3.11.3.4 Rawlins 3-32
3.11.4 Law Enforcement and Emergency Response 3-32
3.11.5 Local Government and State Government Revenues 3-32
3.11.5.1 Ad Valorem Property Tax 3-32
3.11.5.2 Sales and Use Tax 3-33
3.11.5.3 Severance Taxes 3-33
3.11.5.4 Federal Mineral Royalty Distributions 3-33
3.11.6 Attitudes and Opinions 3-33
3.11.7 Environmental Justice 3-34

3.12 TRANSPORTATION 3-34
3.12.1 Access to the Project Site 3-34

3.13 HEALTH AND SAFETY 3-35

TABLE OF CONTENTS

3.14 NOISE 3-35

CHAPTER 4 - ANALYSIS OF ENVIRONMENTAL CONSEQUENCES

4.0 INTRODUCTION 4-1

4.1 GEOLOGY/MINERAL/PALEONTOLOGY 4-2
4.1.1 Impacts 4-2
4.1.1.1 Proposed Action 4-2
4.1.1.2 Alternative A - No Action 4-2

4.2 AIR QUALITY 4-3
4.2.1 Impacts 4-3
4.2.1.1 Proposed Action 4-3
4.2.1.2 Alternative A - No Action 4-4
4.2.2 Mitigation Summary 4-4
4.2.3 Residual Impacts 4-4

4.3 SOILS 4-4
4.3.1 Impacts 4-4
4.3.1.1 Proposed Action 4-4
4.3.1.2 Alternative A - No Action 4-5

4.4 WATER RESOURCES 4-5
4.4.1 Impacts 4-5
4.4.1.1 Proposed Action 4-5
4.4.1.2 Alternative A - No Action 4-6

4.5 VEGETATION/ WETLANDS/NOXIOUS WEEDS 4-7
4.5.1 Impacts 4-7
4.5.1.1 Proposed Action 4-7
4.5.1.2 Alternative A - No Action 4-8

4.6 RANGE RESOURCES AND OTHER LAND USES 4-8
4.6.1 Impacts 4-8
4.6.1.1 Range Resources 4-8
4.6.1.1.1 Proposed Action 4-8
4.6.1.1.2 Alternative A - No Action 4-9
4.6.1.1.3 Mitigation Measures 4-9
4.6.1.1.4 Residual Impacts 4-9
4.6.1.2 Other Land Use 4-9
4.6.1.2.1 Proposed Action 4-9
4.6.1.2.2 No Action 4-9

4.7 WILDLIFE/FISHERIES 4-9
4.7.1 Impacts 4-9
4.7.1.1 Proposed Action 4-9
4.7.1.1.1 General Wildlife 4-11
4.7.1.1.2 Big Game 4-11

TABLE OF CONTENTS

4.7.1.1.3 Upland Game Birds 4-12
4.7.1.1.4 Raptors 4-13
4.7.1.1.5 Threatened and Endangered Species - Wildlife and Fish . 4-13
4.7.1.1.6 Species of Concern - Wildlife and Fish 4-15
4.7.1.2 Alternative A - No Action 4-16

4.8 RECREATION 4-16
4.8.1 Impacts 4-16
4.8.1.1 Proposed Action 4-16
4.8.1.2 Alternative A - No Action 4-16

4.9 VISUAL RESOURCES 4-17
4.9.1 Impacts 4-17
4.9.1.1 Proposed Action 4-17
4.9.1.2 No Action 4-17
4.9.2 Mitigation Summary 4-18
4.9.3 Residual Impacts 4-18

4.10 CULTURAL RESOURCES 4-18
4.10.1 Impacts 4-18
4.10.1.1 Proposed Action 4-18
4.10.1.2 No Action 4-18

4.11 SOCIOECONOMICS 4-19
4.11.1 Impacts 4-19
4.11.1.1 Proposed Action 4-19
4.11.1.1.1 Economic and Employment Effects 4-19
4.11.1.1.2 Carbon County Oil and Gas Activity 4-20
4.11.1.1.3 Effects on Economic Activities in the Vicinity of the Proposed Action 4-20
4.11.1.1.4 Population Effects 4-21
4.11.1.1.5 Temporary Housing Demand 4-21
4.11.1.1.6 Law Enforcement and Emergency Response 4-22
4.11.1.1.7 Fiscal Effects 4-22
4.11.1.1.7.1 Ad Valorem Taxes 4-22
4.11.1.1.7.2 Federal Mineral Royalties and Wyoming Severance Taxes 4-23
4.11.1.1.7.3 Sales and Use Tax. 4-23
4.11.1.1.8 Local Attitudes and Opinions 4-24
4.11.1.1.9 Environmental Justice 4-24
4.11.1.2 No Action 4-24

4.12 TRANSPORTATION 4-25
4.12.1 Impacts 4-25
4.12.1.1 Proposed Action 4-25
4.12.1.1.1 Federal and State Highways 4-25
4.12.1.1.2 County Roads 4-25
4.12.1.1.3 Internal Roads 4-26
4.12.1.2 Alternative A - No Action 4-26

TABLE OF CONTENTS

4.13 HEALTH AND SAFETY 4-26
4.13.1 Impacts 4-26
4.13.1.1 Proposed Action 4-26
4.13.1.2 Alternative A - No Action 4-28
4.13.2 Mitigation Summary 4-28
4.13.3 Residual Impacts 4-28

4.14 NOISE 4-28
4.14.1 Impacts 4-28
4.14.1.1 Proposed Action 4-28
4.14.1.2 No Action 4-28
4.14.2 Mitigation Summary 4-29
4.14.3 Residual Impacts 4-29

4.15 CUMULATIVE IMPACTS 4-29
4.15.1 Geology/Minerals/Paleontology 4-30
4.15.2 Air Quality 4-30
4.15.3 Soils 4-32
4.15.4 Water Resources 4-32
4.15.5 Vegetation and Wetlands 4-33
4.15.6 Range Resources and Other Land Uses 4-33
4.15.6.1 Range Resources 4-33
4.15.6.2 Other Land Use 4-33
4.15.7 Wildlife and Fish 4-34
4.15.8 Recreation 4-35
4.15.9 Visuals 4-36
4.15.10 Cultural Resources 4-36
4.15.11 Socioeconomics 4-36
4.15.12 Transportation 4-37
4.15.13 Health and Safety 4-37
4.15.14 Noise 4-37

CHAPTER 5: CONSULTATION AND COORDINATION

5.0 CONSULTATION AND COORDINATION 5-1

5.1 PUBLIC PARTICIPATION 5-1

5.2 LIST OF PREPARERS 5-3

TABLE OF CONTENTS

REFERENCES CITED R-1

APPENDIX A INTERIM DRILLING POLICY - DEVELOPMENT AUTHORIZED CONCURRENT WITH EIS PREPARATION FOR THE ATLANTIC RIM COALBED METHANE PROJECT

APPENDIX B FEDERAL, STATE, AND COUNTY PERMITS, APPROVALS, AND AUTHORIZING ACTIONS

APPENDIX C C-1 MASTER SURFACE USE PLAN
C-2 MASTER DRILLING PROGRAM
C-3 MASTER DRILLING PROGRAM
C-4 WATER MANAGEMENT PLAN

APPENDIX D PLANT AND WILDLIFE SPECIES OF CONCERN THAT MAY POTENTIALLY OCCUR ON OR NEAR THE SUN DOG POD

TABLE OF CONTENTS

LIST OF TABLES

Page

Table 2-1. Traffic Estimates 2-16

Table 2-2. Disturbance Estimates - Sun Dog Pod 2-17

Table 3-1. Critical Elements of the Human Environment[1], Sun Dog Pod Coalbed Methane Project, Carbon County, Wyoming, 2001. 3-1

Table 3-2. Air Pollutant Background Concentrations, State and Federal Ambient Air Quality Standards, and PSD Increments (ug/m^3) 3-6

Table 3-3. BLM Map Units Found in and Adjacent to the SDPA. 3-8

Table 3-4. Surface Water Quality in the Project Area. 3-10

Table 3-5. Surface Water Quality Comparison. 3-11

Table 3-6. Water-Bearing Characteristics of Geologic Formations in the Washakie Basin. 3-13

Table 3-7. Existing Groundwater Wells in Project Vicinity. 3-15

Table 3-8. Major Ion Composition of Mesaverde Groundwater. 3-15

Table 3-9. Groundwater Quality for Mesaverde Wells in Project Area. 3-16

Table 3-10. Prehistoric Chronology of the Wyoming Basin 3-26

Table 3-11. Historic Chronology of the Washakie Basin 3-27

Table 3-12. Access Routes to the SDPA. 3-35

Table 4-1. Estimated Ad Valorem Property Tax Revenues Tax over the life of the Proposed Action. 4-23

Table 4-2. Estimated Federal Mineral Royalties and Severance Tax over the life of the Proposed Action. 4-23

Table 4-3 Cumulative Impacts Analysis Matrix - Cumulative Impacts Associated with the Sun Dog Pod (Pod 6). 4-31

Table 5-1. List of BLM Interdisciplinary Reviewers 5-3

Table 5-2. List of Consultant Interdisciplinary Team EA Preparers 5-4

TABLE OF CONTENTS

LIST OF FIGURES

Page

Figure 1-1. Location of the Sun Dog Pod in Southcentral Wyoming. 1-3

Figure 1-2. Sun Dog Pod in Relation to other Pods within the Atlantic Rim EIS Project Area 1-4

Figure 2-1. Proposed Developments for the Sun Dog Pod - Atlantic Rim Coalbed Methane Project 2-2

Figure 2-2. Typical CBM Drill Site Layout - Sun Dog Pod. 2-5

Figure 2-3. Typical Completed CBM Well Bore 2-7

Figure 2-4. Schematic of a Typical Injection Well Bore 2-8

Figure 2-5. Schematic of a Typical CBM Production Wellsite. 2-9

Figure 2-6. Typical Water Disposal Facility 2-12

Figure 2-7. Typical Water Transfer Facility. 2-13

Figure 2-8. Typical Compressor Station and Meter Facility. 2-14

Figure 4-1. Wildlife Concerns in Relationship to Proposed Developments in and around the Sun Dog Pod. 4-10

Figure 4-2. Projected Proposed Action-Related Total Annual Gas Production. 4-20

CHAPTER 1

PURPOSE AND NEED

1.0 INTRODUCTION

1.1. DESCRIPTION AND LOCATION

Petroleum Development Corporation (PEDCO) of Gillette, Wyoming has notified the Bureau of Land Management (BLM), Rawlins Field Office, that the company proposes to explore and potentially develop coalbed methane (CBM) wells in the Sun Dog Pod project area (SDPA) of the Atlantic Rim Project Area (ARPA) of southcentral Wyoming (Figure 1-1). The PEDCO proposal is a part of interim drilling activity authorized by the BLM, Rawlins Field Office while an Environmental Impact Statement (EIS) is being prepared for the entire Atlantic Rim CBM Project Area.

The interim development project consists of drilling, completing, and producing a total of ten exploratory CBM wells, one injection well, and related production and water disposal facilities in the SDPA of the ARPA. Four of these CBM wells and one injection well were previously analyzed in an environmental assessment (EA) completed by the BLM, Rawlins Field Office on October 12, 2000, and the Applications for Permit to Drill (APD) were approved October 27, 2000. To date two wells have been drilled, however, one of these wells has subsequently been plugged and abandoned. Further drilling operations are proposed to begin in late summer, 2001. The total life of the project (LOP) is estimated at 10 to 15 years.

The SDPA is located within the administrative boundary of the BLM's Rawlins Field Office in Township 16 North, Range 91 West, Carbon County, Wyoming (Figure 1-1). Access to the SDPA is by State Highway 789 north from Baggs for approximately 22 miles to the intersection with Carbon County Road 608 ("Dad Road"); see Figure 1-2. The distance from State Highway 789 to the SDPA is approximately 6 miles.

The SDPA encompasses approximately 1,000 acres, all of which are federal surface and federal minerals.

1.2 PURPOSE OF AND NEED FOR ACTION

1.2.1 Purpose and Need For the Proposed Development

Exploration and development of federal oil and gas leases by private industry is an integral part of the BLM's oil and gas leasing program under authority of the Mineral Leasing Act of 1920 as amended, the Mining and Minerals Policy Act of 1970, the Federal Land Policy and Management Act of 1976, the National Materials and Minerals Policy, Research and Development Act of 1980, and the Federal Onshore Oil and Gas Leasing Reform Act of 1987.

The purpose of the proposed CBM development is to exercise the lease holders' rights within the project area to drill for, extract, remove, and market gas products. National mineral leasing policies and the regulations by which they are enforced recognize the statutory right of lease holders to

develop federal mineral resources to meet continuing national needs and economic demands so long as undue and unnecessary environmental degradation is not incurred.

Also included is the right of the lease holders within the project area to build and maintain necessary improvements, subject to renewal or extension of the lease or leases in accordance with the appropriate authority. The proposed project would allow PEDCO to determine through exploration and production of CBM if larger scale development is feasible.

1.2.2 Purpose of the Environmental Analysis Process

The purpose of this environmental assessment (EA) is to provide the decision-makers with information needed to make a decision that is fully informed and based on factors relevant to the proposal. It also documents analyses conducted on the proposal and alternatives in order to identify environmental impacts and mitigation measures necessary to address issues. The EA also provides a vehicle for public review and comment on the PEDCO proposal, the environmental analysis, and conclusions about the relevant issues.

This EA has been prepared to evaluate and disclose the potential environmental impacts associated with a CBM project. The proposed exploration project would affect BLM lands managed by the Rawlins Field Office.

Factors considered during the environmental analysis process regarding the exploratory CBM project include the following:

- A determination of whether the proposal and alternatives are in conformance with BLM policies, regulations, and approved resource management plan direction.
- A determination of whether the proposal and alternatives are in conformance with policies and regulations of other agencies likely associated with the project.
- The location of environmentally suitable well pad locations, access roads, pipelines, and production facilities that best meet other resource activities and minimize surface resource impacts yet honor the lease rights within the project area.
- A determination of impacts resulting from the proposed action and alternatives on the human environment, if conducted in accordance with applicable regulations and lease stipulations, and the development of mitigation measures necessary to avoid or minimize these impacts.

1.3 RELATIONSHIP TO POLICIES, PLANS, AND PROGRAMS

The EA is prepared in accordance with the National Environmental Policy Act (NEPA) and is in compliance with all applicable regulations and laws passed subsequent to the act. This EA assesses the environmental impacts of the Proposed Action and No Action Alternatives and serves to guide the decision-making process.

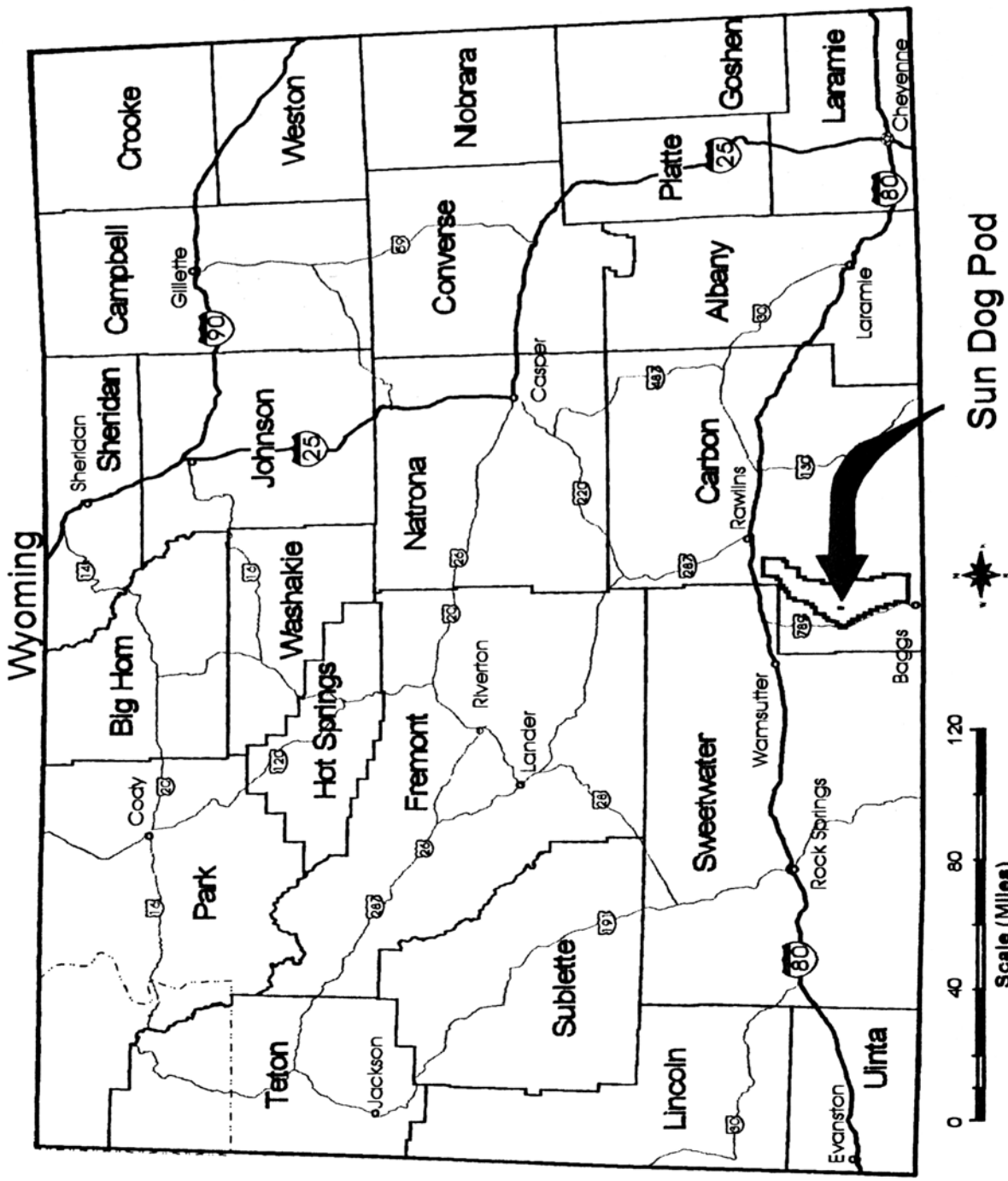

Figure 1-1. Location of the Atlantic Rim - Sun Dog Pod in Southcentral Wyoming.

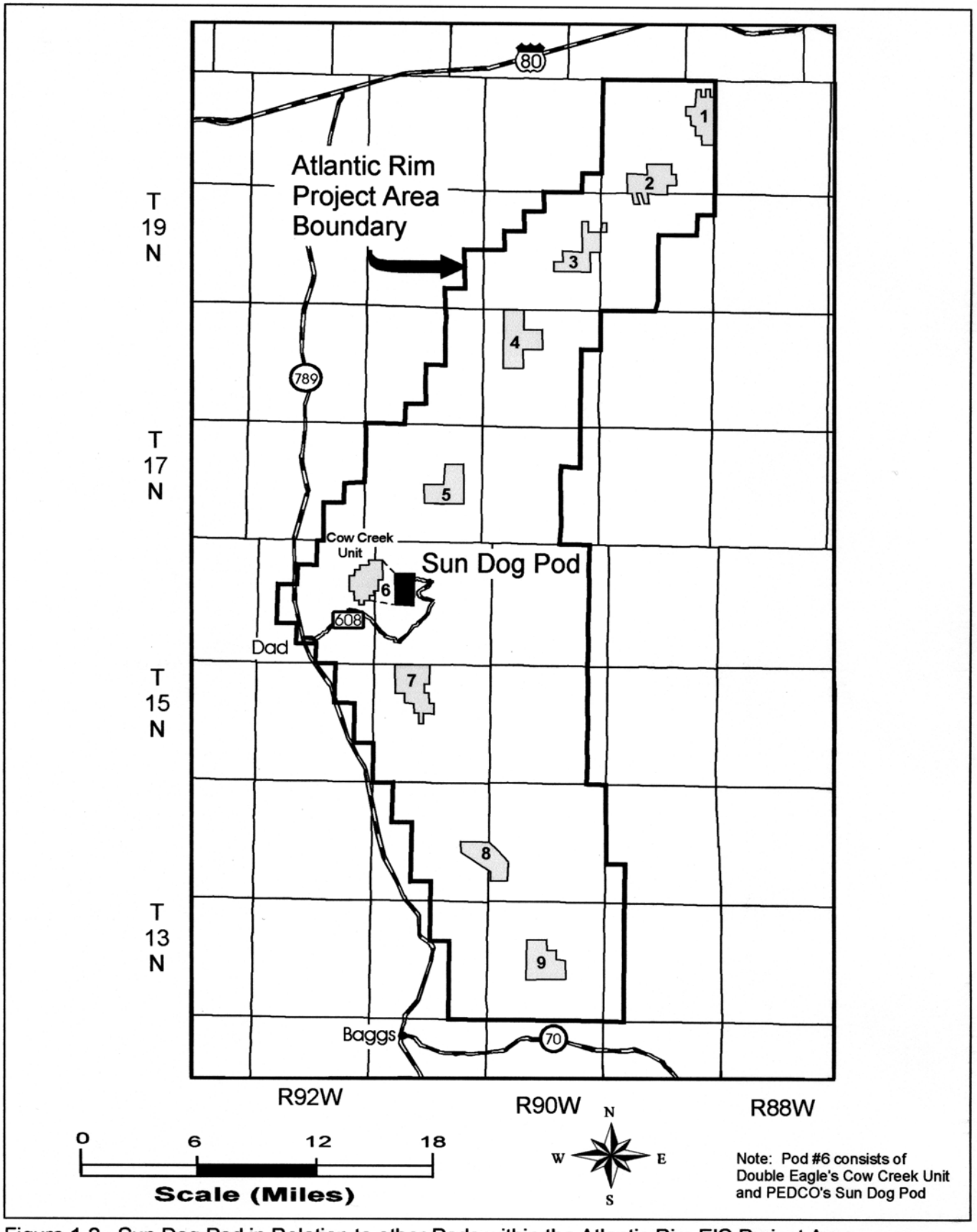

Figure 1-2. Sun Dog Pod in Relation to other Pods within the Atlantic Rim EIS Project Area.

1.3.1 Conformance with Great Divide Resource Area RMP

The BLM's Great Divide Resource Management Plan (RMP) and Record of Decision (ROD) (USDI-BLM 1987, 1988a, 1990) directs the management of BLM-administered lands within the project area. The objective for management of oil and gas resources as stated in the RMP is to provide for leasing, exploration and development of oil and gas while protecting other resource values. The ROD found that all public lands in the resource area are suitable for oil and gas leasing and development, subject to certain stipulations. The BLM considers existing RMP oil and gas decisions to be adequate for CBM and allows for the exploration and testing to determine the viability of CBM development.

1.3.2 Conformance With Interim Drilling Guidelines

The SDPA is one of nine pods that are proposed for exploration and development within the ARPA. Drilling and development is authorized per terms provided in the Interim Drilling Policy - Development Authorized Concurrent with EIS Preparation for the Atlantic Rim Coalbed Methane Project (see Appendix A).

1.3.3 Relationship to Other Plans and Documents

The proposed project is in conformance with the State of Wyoming Land Use Plan (Wyoming State Land Use Commission 1979) and the Carbon County Land Use Plan (Pederson Planning Consultants 1997, 1998) and would comply with all relevant federal state and local laws and regulations (see Appendix B).

The development of this project would not affect the achievement of the Wyoming Standards for Healthy Rangelands (August 1977).

1.3.4 Issues and Concerns

Environmental and social issues of local importance associated with the PEDCO exploratory CBM project are identified as follows:

- Potential impacts to wildlife habitats within the project area and adjacent lands, primarily sage grouse and big game crucial winter range.
- The project area has recorded historical/cultural resource values. There is concern that site disturbing activities associated with exploratory drilling operations may impact historic and cultural values currently unrecorded.
- Reclamation of disturbed areas associated with construction activities and off-road travel is a management concern.
- Potential impacts to surface water quality is a management concern.
- There are concerns regarding potential impacts to air, soil, wildlife, and vegetation within the project area.
- Potential impacts to groundwater is a management concern.

- There are concerns regarding potential impacts to air quality (mostly from generators and processing).
- Cumulative impacts to all resources is a management concern.

CHAPTER 2

PROPOSED ACTION AND ALTERNATIVES

2.0 PROPOSED ACTION

The PEDCO Proposed Action consists of drilling, completing, and operating 6 new productive coalbed methane (CBM) wells and related production and water disposal facilities in the Sun Dog Pod project area (SDPA) of the Atlantic Rim CBM project area (ARPA) (Figure 2-1). The proposal is a part of the Interim Drilling Plan associated with the Atlantic Rim environmental impact analysis in Carbon County, Wyoming.

The Atlantic Rim CBM Environmental Impact Statement (EIS) is scheduled to begin in late summer 2001, and is expected to take about 24 months to complete. During the interim period before the EIS is completed, the BLM, Rawlins Field Office (RFO) will allow, with compliance with criteria described in the Interim Drilling Policy (see Appendix A), the drilling of up to 200 exploratory wells. Currently, oil and gas operators have identified 9 areas or "pods" where these exploratory wells would be located, one of which is the SDPA. The Sun Dog pod is actually a portion of pod number six. The remaining portion of this pod is referred to as the Cow Creek pod, which will be developed by Double Eagle Petroleum and Mining Company. Because the Cow Creek pod will be operated by a different company, utilizing separate facilities, with plans to dispose of produced water by surface methods, a separate environmental analysis will be prepared.

The proposed CBM development is based on a Wyoming Oil and Gas Conservation Commission (WOGCC) approved 80-acre well spacing pattern. In addition to well sites, other facilities, such as access roads, gas gathering and water disposal pipelines, electrical utilities, and compressors, would be developed to facilitate natural gas (methane) production in the well fields. The interim project would develop over a 6 to 12 month period. The productive life of the project is estimated between 10 and 20 years.

Specific components of the Sun Dog CBM project are shown in the Master Surface Use and Master Drilling Plan (MSUP) (Appendix C), and summarized in the following sections of the PEDCO Plan of Operations.

2.1 PLAN OF OPERATIONS

2.1.1 Preconstruction Planning and Site Layout

PEDCO would follow the procedures outlined below to gain approval for proposed activities on BLM-administered lands within the SDPA. Development activities proposed on fee (private) surface would be approved by the WOGCC. The WOGCC permitting procedures require filing an APD with the WOGCC and obtaining a ROW from the surface owner.

- Prior to the start of construction activities, PEDCO would submit a Notice of Staking (NOS), APD, or ROW Application along with a preliminary MSUP to the BLM with a map showing the specific location of the proposed activity (e.g., individual drill sites, pipeline corridors, access roads, or other facilities). The application would include site-specific plans to describe the proposed development (i.e., drilling plans with casing/cementing program; surface use plans with road and drill pad construction details; and site specific reclamation

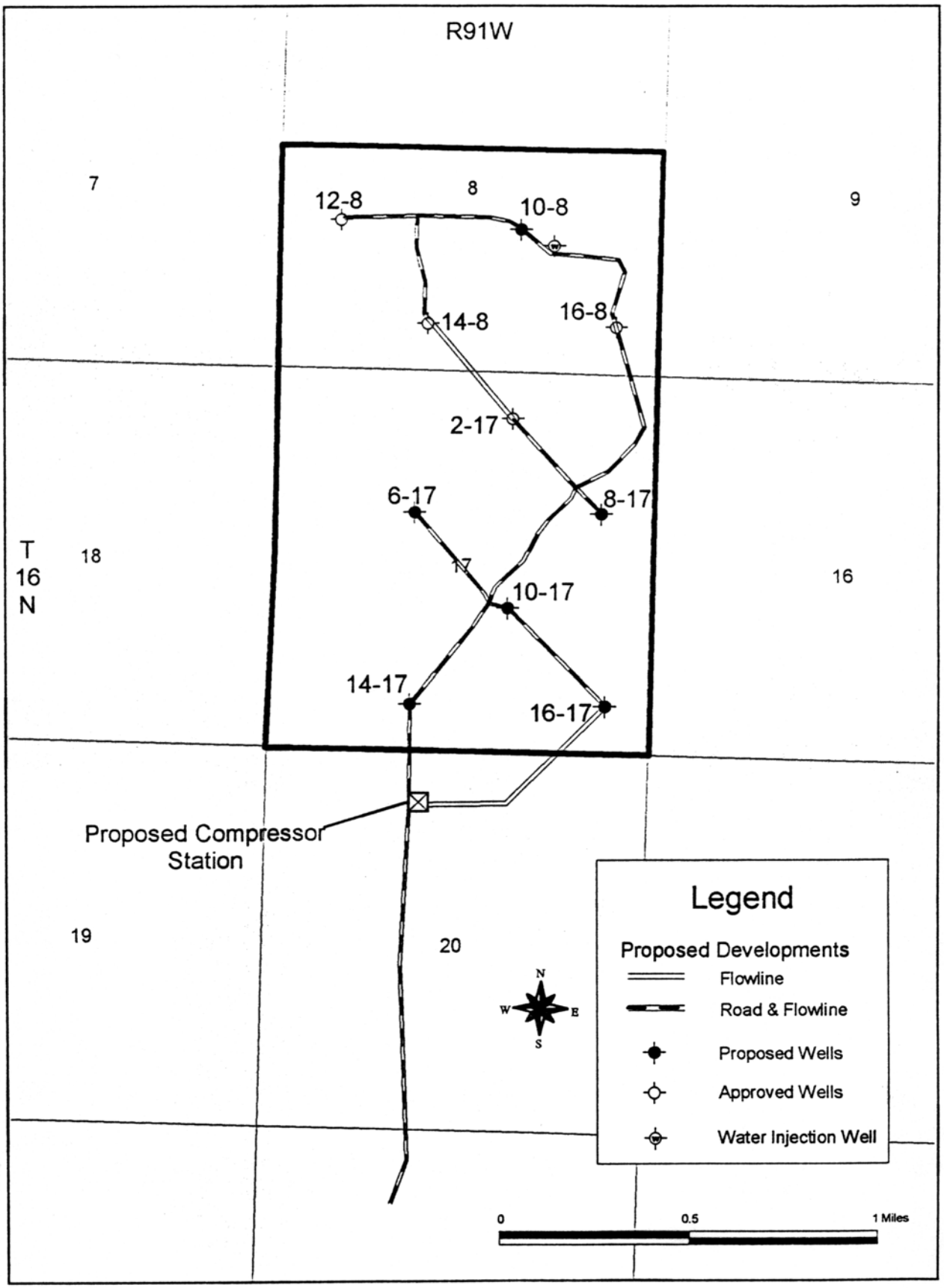

Figure 2-1. Proposed Developments for the Sun Dog Pod - Atlantic Rim Coalbed Methane Project.

plans, etc.). Approval of all planned operations would be obtained in accordance with authority prescribed in Onshore Oil and Gas Order No. 1 (Approval of Operations on Onshore Federal and Indian Oil and Gas Leases).

- The proposed facility would be staked by the PEDCO and inspected by an interdisciplinary team (IDT) and/or an official from the BLM to ensure consistency with the approved RMP, the Interim Drilling Policy (see Appendix A), and oil and gas lease stipulations.

- More detailed construction plans, when required by the BLM for the proposed development, would be submitted to the BLM by PEDCO. The plans would address concerns that may exist concerning construction standards, required mitigation, etc. Negotiation of these plans between PEDCO and the BLM, if necessary to resolve differences, would be based on field inspection findings and would take place either during or after the BLM on-site inspection.

- PEDCO and/or its contractors would revise the MSUP and Drilling Plan as necessary per negotiations with the BLM. The BLM would complete a project-specific environmental analysis that incorporates agreed upon construction and mitigation standards. The BLM would then approve the specific proposal and attach the Conditions of Approval to the permit. PEDCO must then commence with the proposed activity within one year.

Following is a general discussion of proposed construction techniques to be used by PEDCO. More detailed plans can be reviewed in Appendix C1, Master Surface Use Plan. These construction techniques would be applicable to drill site, pipeline, and access road proposals within the SDPA, and may vary between the well sites.

2.1.2 Construction and Drilling Phase

2.1.2.1 Access Road Construction

The primary road access utilized by PEDCO to access the SDPA is Wyoming State Highway 789 (Figure 1-2). Access to the pod is provided by existing one-lane graveled and partially graveled BLM and Carbon County roads as described in Chapter 1 (Section 1.1.2, Location). Access to drill locations from the existing road network already in place would be provided by new and upgraded crowned, ditched, and surfaced roads.

PEDCO proposes to construct required new access roads across public lands in accordance with BLM Manual 9113 standards. Roads would be located to minimize disturbances and maximize transportation efficiency. Roads would be closed and reclaimed by PEDCO when they are no longer required for production operations, unless otherwise directed by the BLM.

Drainage crossings on the access routes within the project area would either be low water crossings or crossings using culverts. Low water crossings would be utilized in shallow channel crossings. Crossings of larger channels within the project area would consist of excavating an area approximately four feet deep under the travelway and filling it with rock and gravel to the level of the drainage bottom. Channel banks on either side of such crossings would be cut down to reduce grade where necessary. Culverts would be installed on smaller, steeper channel crossings. Topsoil would be saved before channel crossing construction occurs. Also, the total area to be disturbed would be flagged on the ground before construction begins.

2.1.2.2 Well Pad Design and Construction

All of the proposed CBM wells would be drilled on lands administered by the BLM. A graded well pad would be constructed at the well sites. Drilling operations on flat terrain would disturb an area approximately 200 feet by 200 feet at each well site.

Two temporary mud pits would be constructed adjacent to each other within the well pad location. A small overflow trench would be excavated at each well and reclaimed after completion operations. Topsoil would be removed and stockpiled prior to excavating the pit as required by BLM. PEDCO estimates the reserve pits would be open from 2 to 8 weeks to allow for evaporation of pit fluids. During this time, the pits would be fenced on all sides to prohibit wildlife and livestock from falling into the pit.

Where drilling on steeper slopes is necessary, the use of cut and fill construction techniques would be utilized. The use of cut and fill construction techniques to level work areas would be limited to areas where the land surface is too steep to allow the drill rig to set up over natural terrain. Drilling operations would be confined within a 200 feet by 200 feet well site area that is leveled and cleared of vegetation. (See Figure 2-2 for a typical CBM drill site layout). In areas where limited cuts and fills are necessary, vegetation may be disturbed or removed.

In the event drilling is non-productive, all disturbed areas, including the well site and new access road, would be reclaimed to the approximate landform that existed prior to construction. Reclamation and site stabilization techniques would be applied as specified in the MSUP.

If drilling is productive, all access roads to the well site would remain in place for well servicing activities (i.e., maintenance, improvements, etc.). Partial reclamation would be completed on segments of the well pad and access road ROW no longer needed.

2.1.2.3 Drilling and Completion Operations

Drilling of the CBM and injection well would utilize a truck-mounted drilling rig. Additional equipment and materials needed for drilling operations would be trucked to the well site. Water for use in drilling the initial well in each pod would be obtained from a local source near the project area. Water for drilling the remaining wells would be obtained from water produced from the initial well. Approximately 600 barrels of water would be needed for drilling each well. Actual water volume used in drilling operations would be dependent upon the depth of the well and any losses that might occur during drilling. The proposed project would require approximately 84,000 gallons (or 0.26 acre-feet) of water per well for cement preparation, well stimulation, and dust control. Drilling water will come from existing PEDCO CBM wells completed in Almond Formation coal seams. Drilling mud usually is native mud and bentonite. As hole conditions dictate, small amounts of polymer additives and/or potassium chloride salts may be added for hole cleaning and clay stabilization.

Depending on the depth of the coal seam, each producing well would be drilled to a depth of 350 feet to 1,200 feet or deeper, and would have steel casing cemented from the top of the coal seam to the surface. The well control system would be designed to meet the conditions likely to be

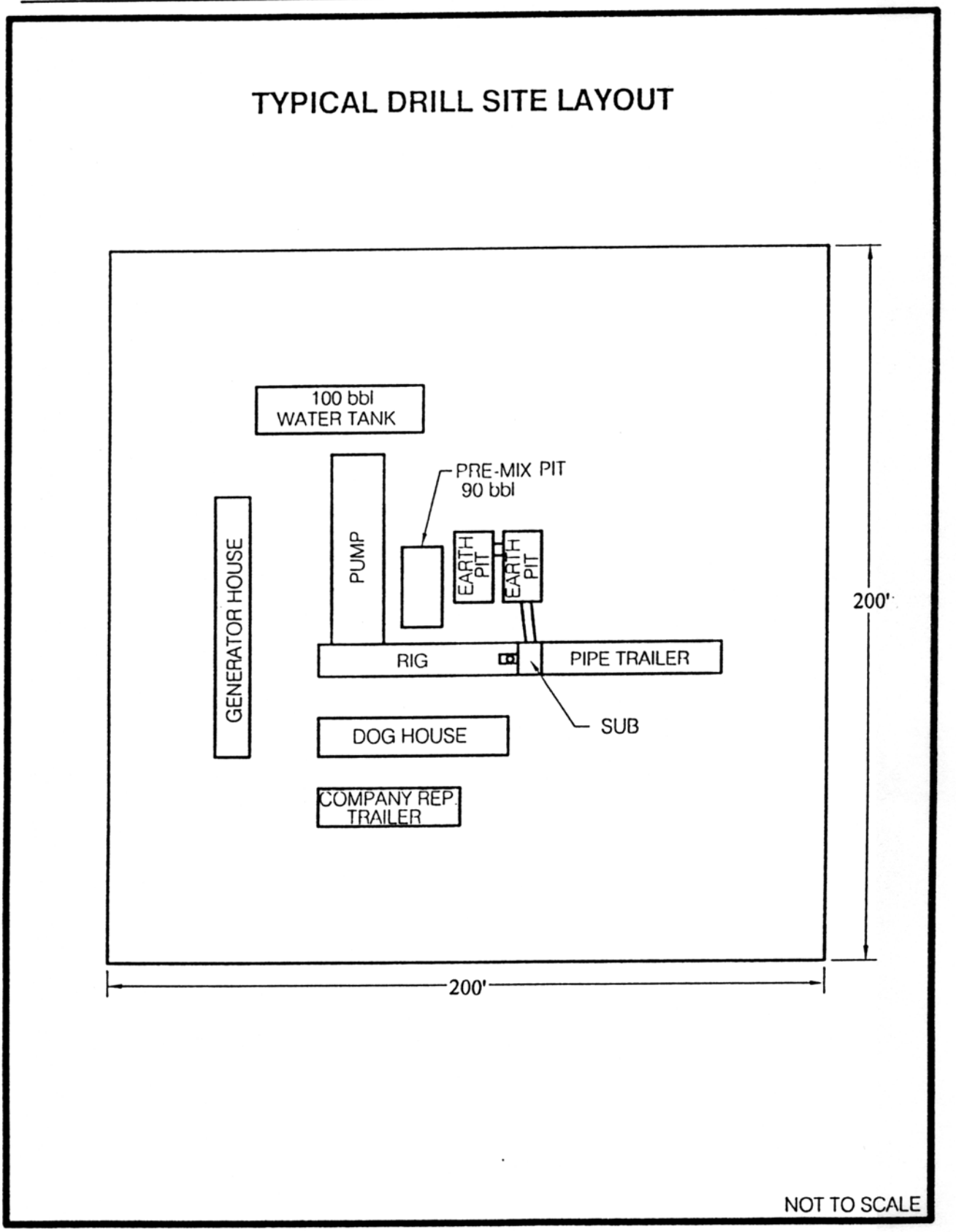

Figure 2-2. Typical CBM Drill Site Layout - Sun Dog Pod.

encountered in the hole and would be in conformance with BLM and State of Wyoming requirements. A completed CBM well bore is shown on Figure 2-3.

The drilling and completion operation for a CBM well normally requires approximately 10 to 15 people at a time, including personnel for logging and cementing activities. Each well would be drilled within a period of 7 to 10 days. A well completion program may be initiated to stimulate production of gas and to determine gas and water production characteristics in preparation for production of gas from a drilled, cased, and cemented well. A mobile completion rig similar to the drill rig may be transported to the well site and used to complete a well. Completion operations are expected to average 2 to 5 days per well. Upon receiving applicable permits, methane gas may be vented and water temporarily discharged into the reserved for a very short period of time during testing to determine whether wells would be produced. Once determined to be productive, wells would be shut-in until pipelines and other production facilities are constructed.

Drilling of the injection wells would be accomplished with the equipment and personnel used to drill the CBM wells. Depth of the injection wells is expected to range from 3,000 to 5,000 feet. Drilling and completion of each of the injection wells is expected to take approximately 7 to 14 days. Installation of surface equipment, holding tanks and pumping equipment would take approximately 14 days. A schematic of a typical injection well is shown on Figure 2-4.

2.1.3 Production Operations

2.1.3.1 Well Production Facilities

Wellhead facilities would be installed if the CBM wells are productive. A weatherproof covering would be placed over the wellhead facilities. At this time, no additional facility would be constructed at the well site for gas-water separation facilities. A downhole pump would be utilized to produce water from the uncased open hole or perforated interval. Methane gas would flow to the surface using the space between the production casing and the water tubing. The long-term surface disturbance at each productive well location where cut and fill construction techniques are utilized would encompass approximately 0.005 acre. Well site production facilities typically would be fenced or otherwise removed from existing uses. A typical CBM production wellsite is shown on Figure 2-5.

Pipeline trenches for well gathering lines are expected to disturb portions of 30-foot wide corridors temporarily and to be reclaimed as soon as practical after construction is completed. Trenches would be constructed along the access roads wherever possible. Separate gathering lines would be buried in the trenches and would transport methane gas to production pod facilities and produced water to injection wells.

At the conclusion of the project, roads, culverts, cattleguards, pipelines, stock watering facilities, or other structures could be left in place for any beneficial use as designated by the BLM. Water wells and produced water would be available to the BLM, with appropriations, diversion, and storage rights already properly filed with the Wyoming State Engineer's Office (SEO). All federally-owned surfaces that contain disturbed areas or facilities that are no longer needed would be reclaimed.

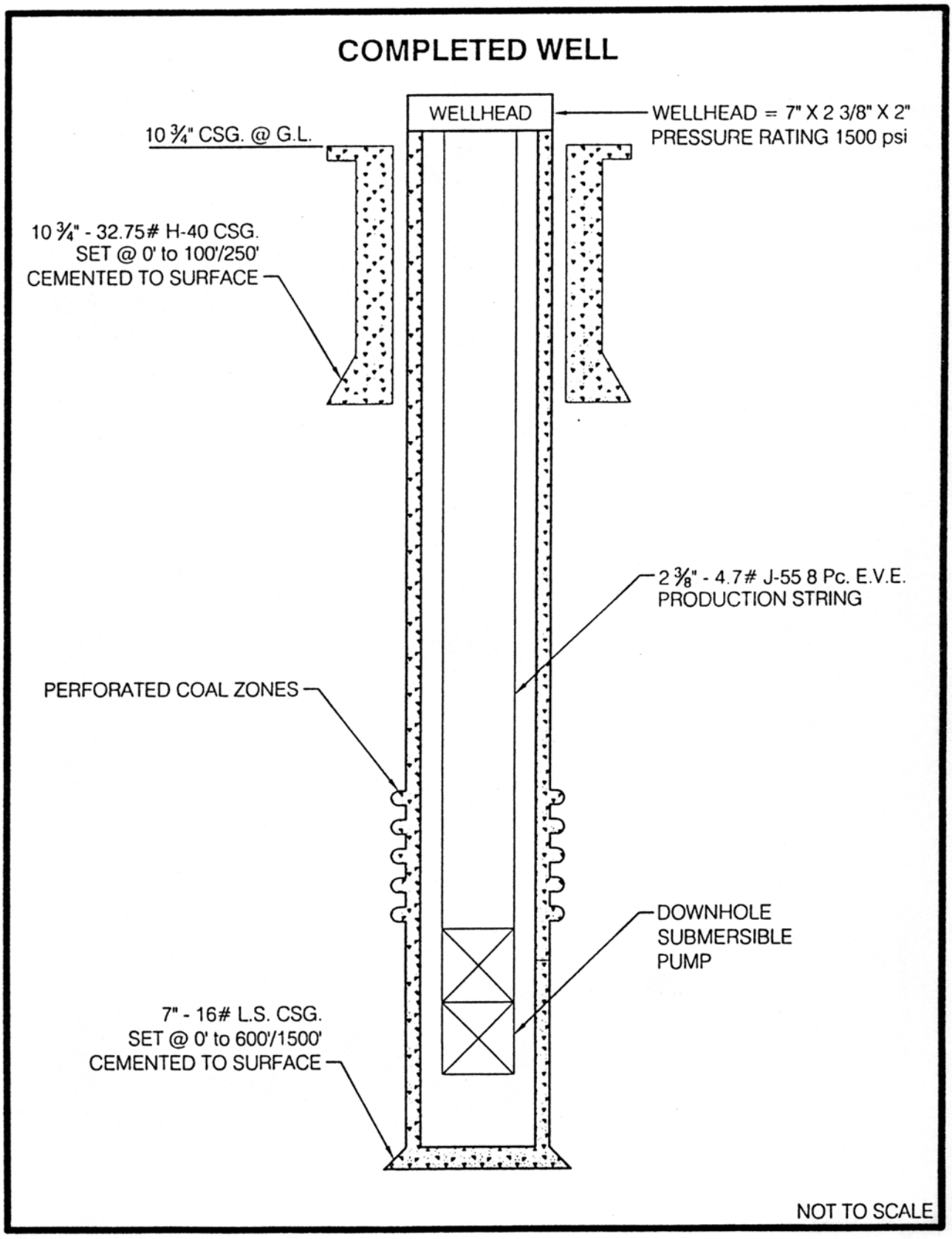

Figure 2-3. Typical Completed CBM Well Bore.

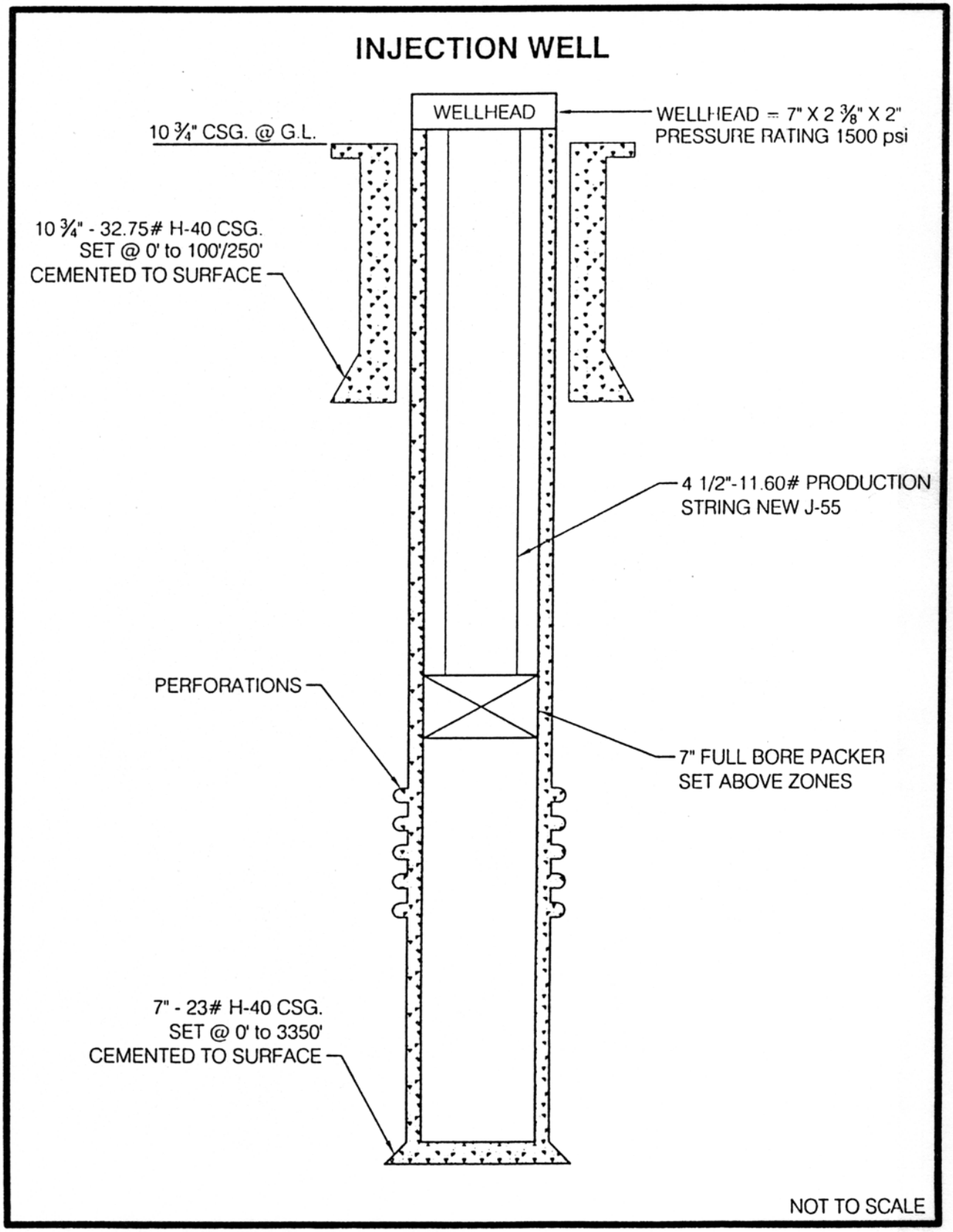

Figure 2-4. Schematic of a Typical Injection Well Bore.

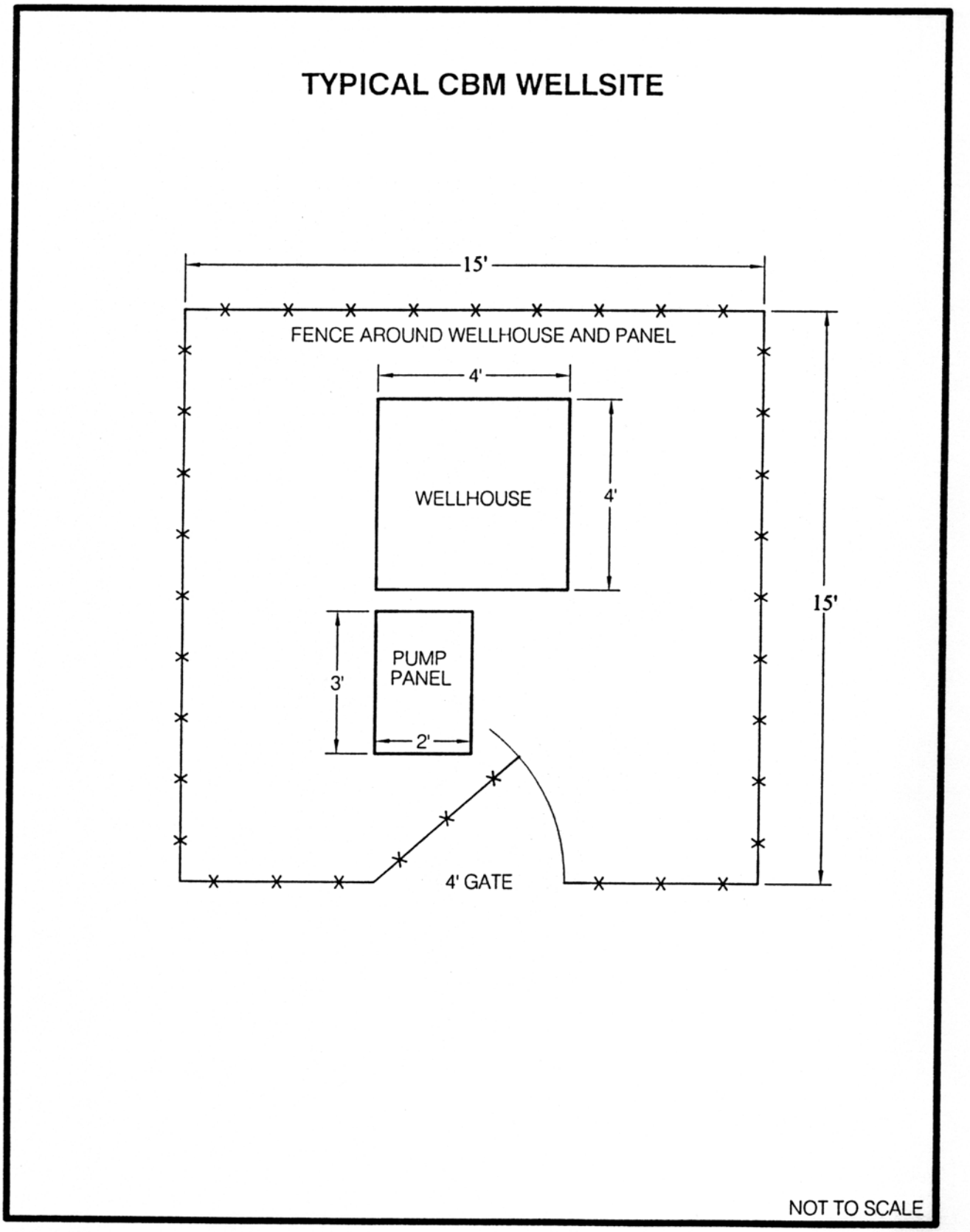

Figure 2-5. Schematic of a Typical CBM Production Wellsite.

2.1.3.2 Power Generation

Electricity would be used to power pumps during well development and to initiate and maintain production. Both natural gas-fired and diesel engine-powered generators would be used on a temporary basis at individual wells until electrical distribution lines are constructed. Either electrical motors or natural gas-fired reciprocating or microturbine engines would power either a booster or blower units. Future compressors are anticipated to be natural gas-fired or electrical units.

2.1.3.3 Pipelines

Three types of pipelines would be constructed as part of the proposed project:

1. Gas-gathering pipeline systems (low pressure, from wellhead to pod building, and from pod building through trunkline to the compressor station).

2. Produced water-gathering pipeline systems.

3. Gas-delivery pipelines (high pressure, from compressor station to existing transmission pipelines).

Reclamation of pipeline corridors would occur as soon as practical after pipeline construction is completed.

2.1.3.3.1 Gas-Gathering Pipeline Systems

As part of the transportation corridor system linking the wells and ancillary facilities, gas-gathering pipelines and produced water-gathering pipelines would be constructed, placed together in the same trench/ditch, when practical, and buried. Construction and installation of pipelines would occur immediately after well drilling. Access roads typically would follow the pipeline right-of-way, except in a limited number of cases where topography dictates or as required by the BLM. Separate gathering lines would transport methane gas to production pod facilities and produced water away from wells to injection wells.

Pod gathering lines, averaging 1.3 miles long in length, are expected to disturb portions of 30-foot wide corridors, and would transport gas from each compression station to a trunkline.

Gas-delivery pipelines connecting compressor stations with existing transmission pipelines are expected to be located along existing roads. Disturbance related to these delivery lines is expected to be confined to areas not wider than 50 feet, located within rights-of-way to be established. Production must be established before potential pipeline locations can be identified for site-specific environmental analysis. The proposed gas-delivery line for the SDPA is shown on Figure 2-1.

Development would be constrained by the gas production from the coal seam(s) and by the pipeline capacity available to transport compressed gas to markets. Currently, the pipeline capacity within the project area is 12-60 MMCFD, depending on the pipeline connecting locations.

Long-term CBM well water production data within the project area are not available. Indications from short-term tests on recently drilled CBM wells are that discharge rates would be highly variable, with the maximum value occurring at the onset of production and declining throughout the project life. Due to the difference in coal depth and thickness, comparison with water production rates in the Powder River Basin may not be valid. Until long-term testing can be conducted, an

average life-of-project (LOP) discharge rate of 8 gpm was assumed for this analysis. This rate is based on knowledge of hydrology and geology of the area and minimal production rate data. Long-term average water production would not be expected to exceed an estimated of 0.04 ac-ft/day/well (11,500 gallons/day/well). Analyses from existing wells in the project area indicate that the TDS concentrations of produced water would range from approximately 400 mg/l to 2000 mg/l. CBM produced water is typically of the sodium-bicarbonate type.

2.1.3.3.2 Produced Water-Gathering System and Injection Facilities

Produced water from individual wells would be collected and injected at disposal wells located in each pod. Prior to drilling the injection wells, a permit will be submitted to and received from the SEO and WDEQ/WQD.

The number of injection wells would be dependent upon the ability of the host aquifer to accept water and the amount of water produced by each CBM well. Produced water-gathering pipelines would be constructed along the well access road wherever feasible, from the wellhead to injection well locations. The water lines would be placed together in the same trench/ditch as gas gathering lines wherever practical, and buried. A typical water disposal facility is shown on Figure 2-6.

Transfer pumping stations would be utilized during production operations to transfer produced water from the CBM well(s) to the disposal well. The transfer pumping stations are needed in those areas where elevation differences require supplemental pumping to transfer the produced water. If transfer pumping stations are required, they would be identified in the MSUP for each Pod. The pumping station would consist of a 400 barrel water tank and a small centrifugal water pump. The pumping station would be confined to a 120 foot by 120 foot area. An approximate 3-foot berm would be constructed around the perimeter of the pumping station area to contain any potential spills. A small pump house would be constructed immediately outside of the bermed area to house the centrifugal pump. A typical water transfer facility is shown on Figure 2-7.

2.1.3.3.3 Gas-Delivery Pipelines and Compression

Produced natural gas (methane) under wellhead pressure would move through the low pressure gas gathering system to a compressor station. Typical gathering system line pressure is less than 100 pounds per square inch (psi). Gas arriving at the compressor station would be compressed from line pressure to facilitate transport and introduction of the gas into an existing transmission pipeline.

Compression of the gas at a field compressor station would increase the pressure to an estimated 700 to 1,450 psi. One existing field compressor station ultimately is expected to contain up to three 1,340-HP engines. The compressor station would have a pad size of 200 feet by 200 feet and would result in approximately 0.9 acre of site disturbance. All compressors are expected to be housed within structures. Approximately 1.75 miles of all-weather road would need to be constructed to the SDPA compressor station. A typical compressor station and meter facility is shown on Figure 2-8.

2.1.4 Ancillary Facilities

All wells, pipelines, and associated ancillary production facilities would be operated in a safe manner by PEDCO as set forth by standard industry operating procedures. Routine maintenance

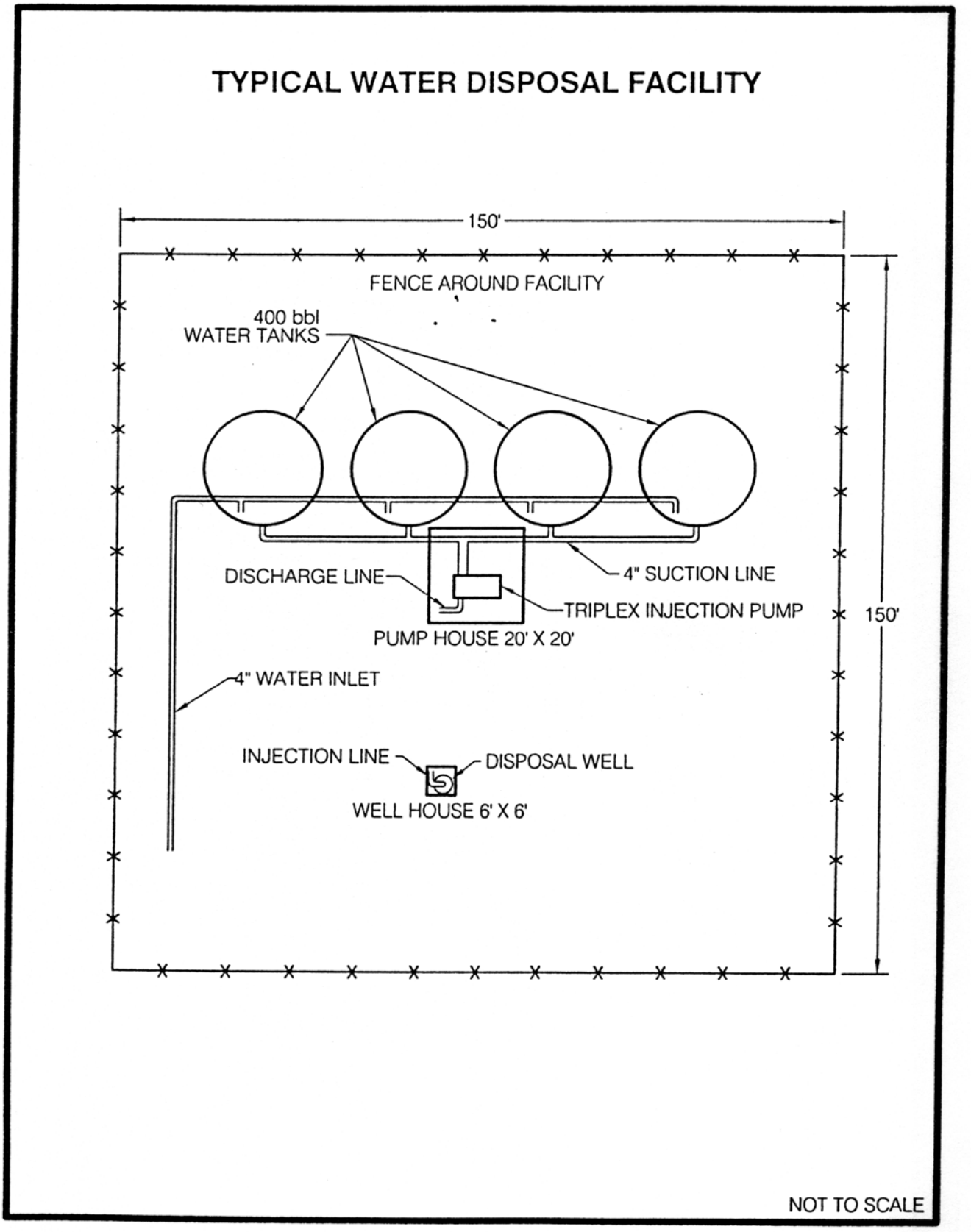

Figure 2-6. Typical Water Disposal Facility.

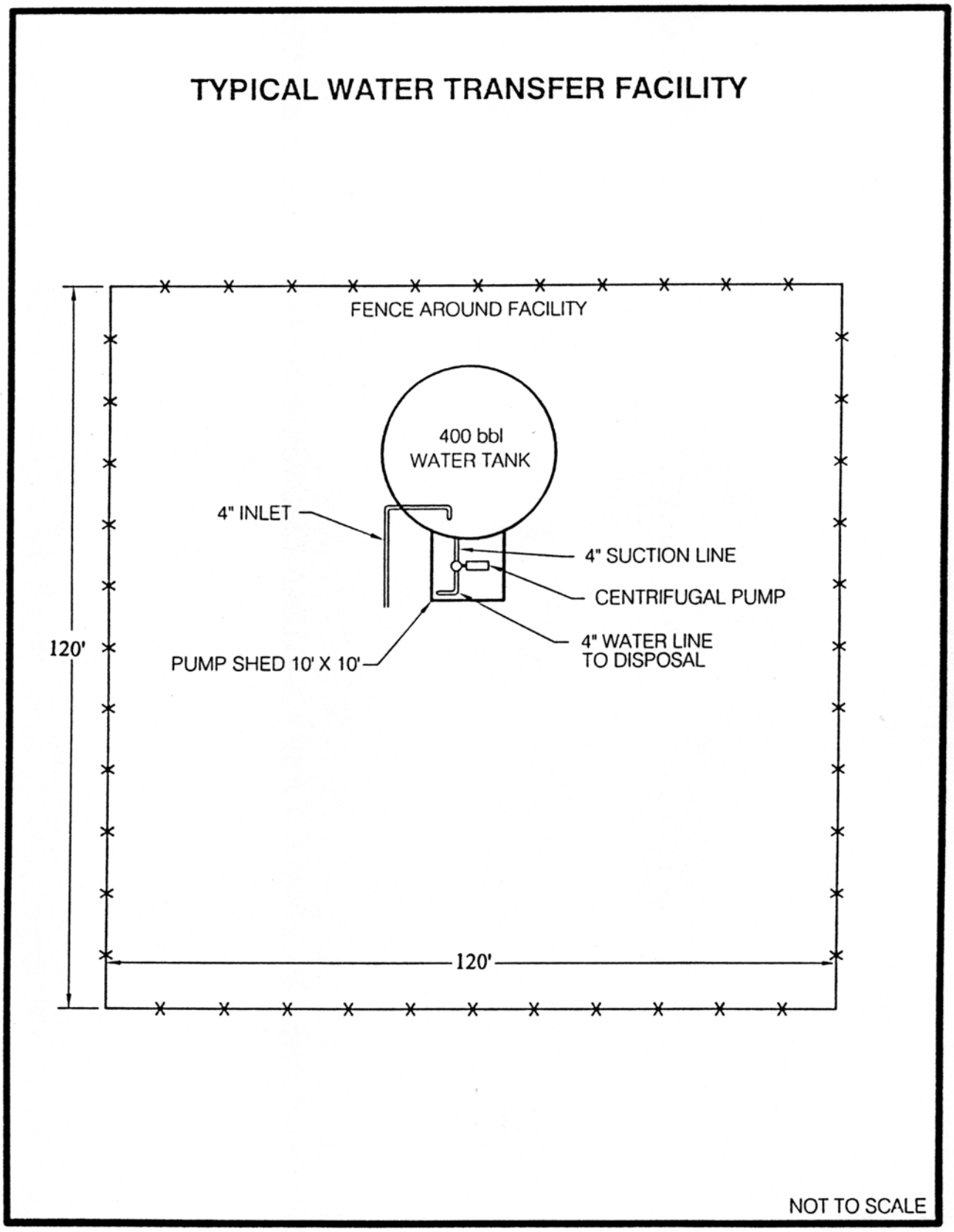

Figure 2-7. Typical Water Transfer Facility.

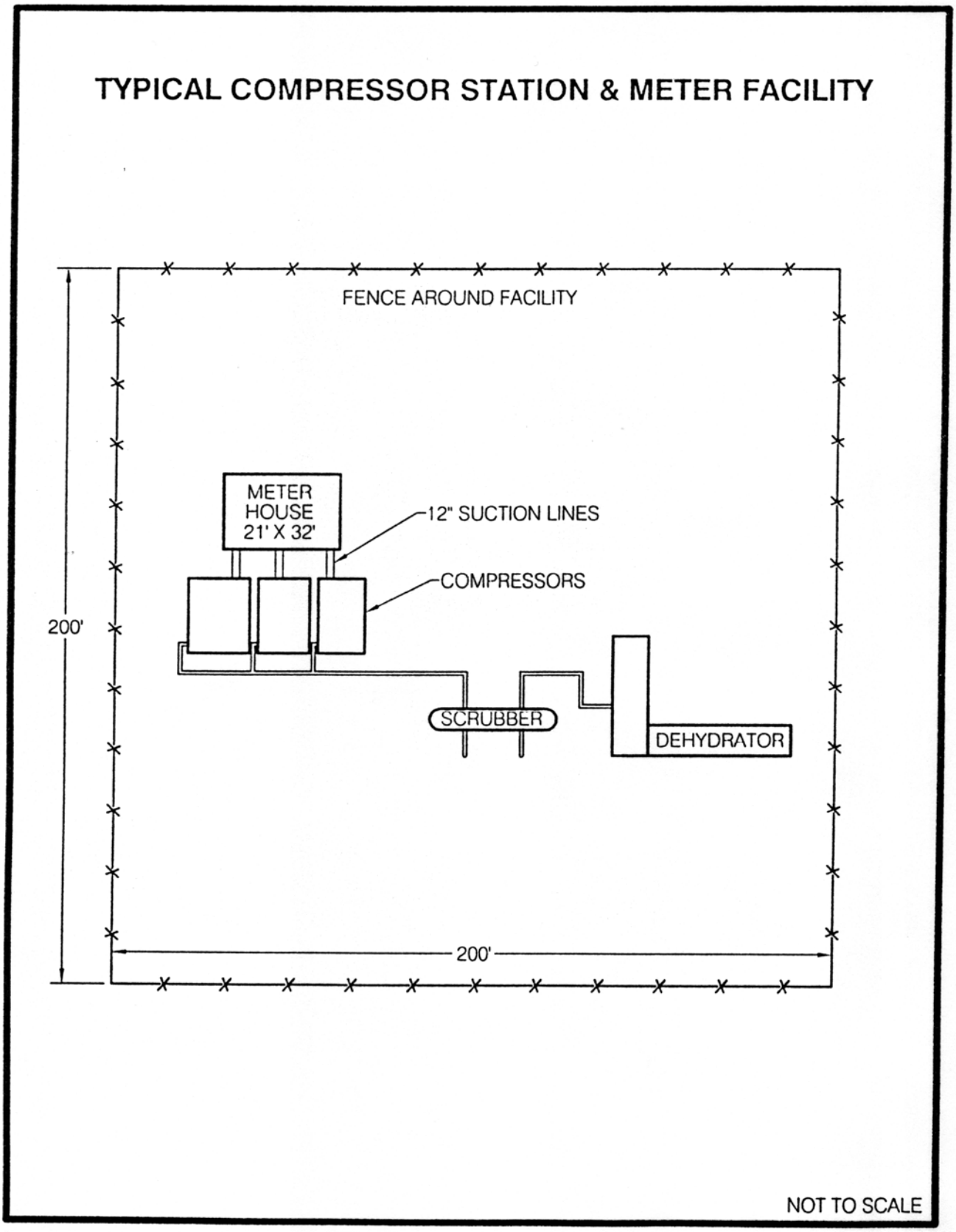

Figure 2-8. Typical Compressor Station and Meter Facility.

of producing wells would be necessary to maximize performance and detect potential difficulties with gas production operations. Each well location would be visited about every other day to ensure operations are proceeding in an efficient and safe manner. The visits would include checking separators, gauges, valves, fittings, and on-site storage of produced water and condensates. Routine on-site equipment maintenance would also be performed as necessary. Additionally, all roads and well locations would be regularly inspected and maintained to minimize erosion and assure safe operating conditions.

2.1.5 Traffic Estimates and Work Force Loading Schedule

Estimated traffic requirements for drilling, completion, and field development operations are shown in Table 2-1. The TRIP TYPE column lists the various service and supply vehicles that would travel two and from the well sites and production facilities. The ROUND TRIP FREQUENCY column lists the number of trips both external (i.e., to/from the pods), and internal (within the pod). The figures provided in Table 2-1 should be considered general estimates. Drilling and production activity levels may vary over time in response to weather and other factors.

2.1.6 Site Restoration and Abandonment

PEDCO proposes to completely reclaim all disturbed areas not needed for production activities. Reclamation would generally include: (1) complete cleanup of the disturbed areas (drill sites, access roads, etc.), (2) restoration of the disturbed areas to the ground contour that existed prior to construction, (3) replacement of topsoil over all disturbed areas, (4) ripping of disturbed areas to a depth of 12 to 18 inches, and (5) seeding of reclaimed areas with a BLM approved, certified weed free, seed mixture.

2.1.7 Summary of Estimated Disturbances

Table 2-2 summarizes the estimated disturbances that would result with implementation of the Sun Dog project.

2.1.8 Project-Wide Mitigation Measures and Procedures

PEDCO proposes to implement the following mitigation measures, procedures, and BLM require management practices on public lands to avoid or mitigate resource or other land use impacts. These mitigation measures and procedures would be applied on privately owned surface unless alternate actions are specifically required by the involved private surface owners. An exception to a mitigation measure and/or design feature may be approved on public land on a case-by-case basis when deemed appropriate by the BLM. An exception would be approved only after a thorough, site-specific analysis determined that the resource or land use for which the measure was put in place is not present or would not be significantly impacted.

2.1.8.1 Preconstruction Planning and Design Measures

1. PEDCO and the BLM would make onsite inspections of each proposed and staked facility site (e.g., well sites), new access road, access road reconstruction, and pipeline alignment projects so that site-specific recommendations and mitigation measures can be developed.

Table 2-1. Traffic Estimates

TRIP TYPE	ROUND TRIP FREQUENCY	
Drilling (2 rigs, 2 crews/rig)	**External (to/from pod)**	**Internal (within pod)**
Rig supervisor	4/day	same
Rig crews	4/day	same
Engineers [a]	2/week	1/day/rig
Mechanics	4/week	same
Supply delivery [b]	1/week	2-4/day
Water truck [c]	1/month	2 round trips/day
Fuel trucks	2 round trips/well	same
Mud trucks [d]	1/week	2/day
Rig move [e]	8 trucks/well	8 trucks/well
Drill bit/tool delivery	1 every 2 weeks	same
Completion		
Smeal rig/crew	1/day	same
Cement crew	2 trips/well	same
Consultant	1/day	same
Well loggers	3 trips/well	same
Gathering systems	8/day	same
Power systems	2/day	same
Compressor stations	2/day	same
Other field development	3/day	same
Testing and operations	2/day	same

Notes:
[a] Engineers travel to pod weekly and stay in a trailer in the pod during the week.
[b] Current plans are to establish a central supply area within a pod and deliver supplies on a weekly basis.
[c] Water trucks would deliver water to rigs from a location within the pod.
[d] Current plans are to establish a central mud location within a pod and deliver mud on a weekly basis.
[e] It would require 4 trucks to move each rig to a pod. Upon completion of drilling in a pod, each rig would move to the next pod.

2. New road construction and maintenance of existing roads in the SDPA and ARPA would be accomplished in accordance with BLM Manual 9113 standards unless private landowners or the State of Wyoming specify otherwise.

3. Prior to construction, PEDCO would submit a Master Surface Use Plan (MSUP) for each pod. This plan would contain individual APD's for each drill site and Sundry Notices and/or ROW applications for pipeline and access roads. APD's submitted by PEDCO would show the layout of the drill pad over the existing topography, dimensions of the pad, volumes and cross sections of the cut and fill (when required), location and dimensions of reserve pit(s), and access road egress and ingress. The MSUP would include itemization of project administration, time frame, and responsible parties.

Table 2-2. Disturbance Estimates - Sun Dog Pod.

PEDCO - Sun Dog Pod				
Facility	**Development Phase**			**Operations**
	Length (feet)	Width (feet)	Acres	Acres
New Roads (includes gas and water ROW's)	11,949	40	11.0	11.0
Gas Lines (to sales line)	3,700	30	2.5	0
Drill Pads (6)	200	200	5.5	0.03
Compressor Station (1)	200	200	0.9	0.9
Pumping Stations (4)	120	120	1.3	1.3
Total Disturbance			**21.2**	**13.2**

4. PEDCO would slope-stake construction activities when required by the BLM (e.g., steep and/or unstable slopes) and receive approval from the BLM prior to start of construction.

5. BLM would require the road to be crowned and ditched with a .03 to .05 ft crown, and the topsoil would be pulled back down on the cut slope so there is no berm left at the top of the cut slope.

6. BLM would require that culverts be a minimum of 12" of fill or ½ the pipe diameter, which ever is greater. The inlet and outlet will be set flush with existing ground and lined up in the center of the draw. The bottom of the pipe will be bedded on good material before backfilling. Backfill with unfrozen material and no rocks larger that two inches in diameter. Care would be exercised to thoroughly compact the backfill under the haunches of the conduit. The backfill would be brought up evenly in 6" layers on both sides of the conduit.

7. Additional culverts would be placed in the existing access road as needed or directed by BLM.

8. BLM would require surfacing of the access road prior to moving the drilling equipment/rig onto the pad, with an appropriate grade of gravel to a depth of 4".

9. BLM would require that access roads be maintained in a safe and usable condition. A regular maintenance program would include, but is not limited to, blading, ditching, culvert installation, and surfacing.

10. If snow removal is required outside new and existing roadways, BLM would require that snow removal equipment be equipped with shoes to keep the blade off the ground surface. If the surface of the ground is uneven, the BLM would require special precautions be taken to ensure that equipment blades do no destroy vegetation.

11. BLM would require wind ditches be constructed, as necessary, to divert water from road ditches.

2.1.8.2 Resource-Specific Requirements

PEDCO proposes to implement the following resource-specific mitigation measures, procedures, and BLM management requirements on public lands.

2.1.8.2.1 Range Resources and Other Land Uses

Mitigation requirements listed under Soils, Vegetation and Wetlands, and Wildlife of this EA also apply to Range Resources and Other Land Uses.

1. PEDCO would coordinate with the affected livestock operators to ensure that livestock control structures remain functional during drilling and production operations.

2.1.8.2.2 Air Quality

1. All BLM conducted or authorized activities must comply with applicable local, state, tribal and Federal air quality regulations and standards. PEDCO would adhere to all applicable ambient air quality standards, permit requirements (including preconstruction, testing, and operating permits), motorized equipment and other regulations, as required by the State of Wyoming, Department of Environmental Quality, Air Quality Division (WDEQ-AQD).

2. PEDCO would not allow burning garbage or refuse at well locations or other facilities. Any other open burning would be conducted under the permitting provisions of Section 13 of the Wyoming Air Quality Standards and Regulations.

3. On Federal land, PEDCO would initiate immediate abatement of fugitive dust (by application of water, chemical dust suppressants, or other measures) when air quality, soil loss, or safety concerns are identified by the BLM or the WDEQ-AQD. These concerns include, but are not limited to, potential exceedances of applicable air quality standards. The BLM would approve the control measure, location, and application rates. If watering is the approved control measure, the operator must obtain the water from state-approved source(s).

2.1.8.2.3 Transportation

1. Existing roads would be used as collectors and local roads whenever possible. Standards for road design would be consistent with BLM Road Standards Manual Section 9113.

2. Roads not required for routine operation and maintenance of producing wells and ancillary facilities would be permanently blocked, reclaimed, and revegetated.

3. Areas with important resource values, steep slopes and fragile soils should be avoided where possible in planning for new roads.

4. Permits are required from Carbon County for any road access to or across a county road or for any pipeline crossing of a county road. These permits should be acquired prior to construction of additional roads. All roads on public lands which are not required for operation and maintenance of field production should be permanently blocked, re-contoured and reseeded. Roads on private lands should be treated similarly depending on the desires of the land owner.

5. The Proponent would be responsible for preventive and corrective maintenance of roads in the project area throughout the duration of the project. This may include blading, cleaning ditches and drainage facilities, dust abatement, noxious weed control, or other requirements as directed by the BLM or the Carbon County Road and Bridge Department.

6. Except in emergency situations, access would be limited to drier conditions to prevent severe rutting of the road surface. Culverts would be installed where needed to allow drainage in all draws and natural drainage areas. Low water crossings would be utilized where applicable. Onsite reviews would be conducted with BLM personnel for approval of proposed access prior to any construction.

2.1.8.2.4 Minerals/Paleontology

Mitigation measures presented in the Soils and Water Resources sections of this EA would avoid or minimize many of the potential impacts to the surface mineral resources. Protection of subsurface mineral resources from adverse impacts would be provided by the BLM and WDEQ casing and cementing policy.

Potential scientifically significant paleontological resources within the Lewis Shale, the only geologic formation of concern which underlies the SDPA would be protected through the following mitigation measures:

1. If recommended by the BLM, each proposed facility located in areas with known and potential vertebrate paleontological resource significance) would be surveyed by a BLM-approved paleontologist prior to surface disturbance (USDI-BLM 1987, 1990).

2. Discovery Contingency. Contingency should be made for the accidental discovery of significant fossils by project personnel. If fossils are discovered by construction personnel during implementation of the project the BLM would be notified immediately. If the fossils could be adversely affected by construction, construction activities would be redirected until a qualified paleontologist has determined the importance of the uncovered fossils and the extent of the fossiliferous deposits and made and implemented recommendations regarding further mitigation.

3. Field Survey. No specific data currently exists on deposits of high and undetermined paleontologic potential in SDPA. For that reason field survey for paleontologic resources would be conducted on a case by case basis, as directed by the BLM, in areas in which surface exposures of the Browns Park, Green River, and Wasatch formations crop out. Field survey may result in the identification of additional mitigation measures to lessen adverse impacts to fossil resources. This mitigation may include collection of additional data and fossil material, obtaining representative samples of fossil material, by monitoring excavation; or by avoidance. In some cases no action beyond that conducted during the field survey may be necessary.

   A report would be submitted to the BLM following the completion of each field survey. That report will detail the results of the survey, including a list of fossils collected, if any were, and may include recommendations for, or detail the results of additional mitigation. If significant fossils are collected, the report must document the curation of specimens along with associated geologic records into the collections of an acceptable museum repository.

2.1.8.2.5 Soils

1. Reduce the area of disturbance to the absolute minimum necessary for construction and production operations while providing for the safety of the operation.

2. Where feasible, locate pipelines immediately adjacent to roads to avoid creating separate areas of disturbance and in order to reduce the total area of disturbance.

3. Avoid using frozen or saturated soils as construction material.

4. Minimize construction activities in areas of steep slopes.

5. Design cutslopes in a manner that would allow retention of topsoil, surface treatment such as mulch, and subsequent revegetation.

6. Selectively strip and salvage topsoil or the best suitable medium for plant growth from all disturbed areas to a minimum depth of 6 inches on all well pads.

7. Where possible, minimize disturbance to vegetated cuts and fills on existing roads that are improved.

8. Install runoff and erosion control measures such as water bars, berms, and interceptor ditches if needed.

9. Install culverts for ephemeral and intermittent drainage crossings. Design all drainage crossing structures to carry the 25- to 50-year discharge event, or as otherwise directed by the BLM.

10. Implement minor routing variations during access road layout to avoid steep slopes adjacent to ephemeral or intermittent drainage channels. Maintain a 100-foot wide buffer strip of natural vegetation where possible (not including wetland vegetation) between all construction activities and ephemeral and intermittent drainage channels.

11. Include adequate drainage control devices and measures in the road design (e.g., road berms and drainage ditches, diversion ditches, cross drains, culverts, out-sloping, and energy dissipators) at sufficient intervals and intensities to adequately control and direct surface runoff above, below, and within the road environment to avoid erosive concentrated flows. In conjunction with surface runoff or drainage control measures, use erosion control devices and measures such as temporary barriers, ditch blocks, erosion stops, mattes, mulches, and vegetative covers. Implement a revegetation program as soon as possible to re-establish the soil protection afforded by a vegetal cover.

12. Upon completion of construction activities, restore topography to near pre-existing contours at the well sites, along access roads and pipelines, and other facilities sites; replace up to 6 inches of topsoil or suitable plant growth material over all disturbed surfaces; apply fertilizer as required; seed; and mulch.

2.1.8.2.6 Water Resources

Other mitigation measures listed in the Soils, and Vegetation and Wetlands sections of this EA would also apply to Water Resources.

1. Limit construction of drainage crossings to no-flow periods or low-flow periods.

2. Minimize the area of disturbance within perennial, ephemeral and intermittent drainage channel environments.

3. Prohibit construction of well sites, access roads, and pipelines within 500 feet of surface water and/or riparian areas. Possible exceptions to this would be granted by the BLM based on an environmental analysis and site-specific mitigation plans.

4. Design channel crossings to minimize changes in channel geometry and subsequent changes in flow hydraulics.

5. Maintain vegetation barriers occurring between construction activities and ephemeral and intermittent channels.

6. Design and construct interception ditches, sediment traps/silt fences, water bars, silt fences and revegetation and soil stabilization measures if needed.

7. Construct channel crossings by pipelines such that the pipe is buried a minimum of four feet below the channel bottom.

8. Regrade disturbed channel beds to the original geometric configuration and the same or very similar bed material replaced.

9. Case wells during drilling, and case and cement all wells in accordance with Onshore Order No. 2 to protect all high quality water aquifers. High quality water aquifers are aquifers with known water quality of 10,000 TDS or less. Include well casing and welding of sufficient integrity to contain all fluids under high pressure during drilling and well completion. Further, wells would adhere to the appropriate BLM cementing policy.

10. Construct the reserve pits in cut rather than fill materials or compact and stabilize fill. Inspect the subsoil material of the pit to be constructed in order to assess soil stability and permeability and whether reinforcement and/or lining are required. If lining is required, line the reserve pit with a reinforced synthetic liner at least 12 mils in thickness and a bursting strength of 175 x 175 pounds per inch (ASTMD 75179). Consideration should be given to use of closed or semi-closed drilling systems in situations where a liner may be required.

11. Maintain two feet of freeboard on all reserve pits to ensure the reserve pits are not in danger of overflowing. Shut down drilling operations until the problem is corrected if leakage is found outside the pit.

12. Extract hydrostatic test water used in conjunction with pipeline testing and all water used during construction activities from sources with sufficient quantities and through appropriation permits approved by the State of Wyoming.

13. Discharge hydrostatic test water in a controlled manner onto an energy dissipator. The water is to be discharged onto undisturbed land that has vegetative cover, if possible, or into an established drainage channel. Prior to discharge, treat or filter the water to reduce pollutant levels or to settle out suspended particles if necessary. If discharged into an established drainage channel, the rate of discharge would not exceed the capacity of the channel to safely convey the increased flow. Coordinate all discharge of test water with the Wyoming SEO and the BLM.

14. Discharge all concentrated water flows within access road ROW's onto or through an energy dissipator structure (e.g., riprapped aprons and discharge points) and discharge into undisturbed vegetation.

15. Develop and implement a pollution prevention plan (PPP) for storm water runoff at drill sites as required per WDEQ storm water National Pollution Discharge Elimination System (NPDES) permit requirements. The WDEQ requires operators to obtain a field permit for fields of 20 wells or more.

16. Exercise stringent precautions against pipeline breaks and other potential accidental discharges of toxic chemicals into adjacent streams. If liquid petroleum products are stored on site in sufficient quantities (per criteria contained in 40 CFR Part 112), a Spill Prevention Control and Countermeasures (SPCC) plan would be developed in accordance with 40 CFR Part 112, dated December 1973.

17. Coordinate all crossings or encroachments of waters of the U.S. with the U.S. Army Corps of Engineers (COE).

18. Any changes in the produced water disposal method or location must have written approval from the BLM before the changes take place.

2.1.8.2.7 Fisheries

1. No fisheries mitigation is needed beyond that indicated under Water Resources and Special Status Species Fish.

2.1.8.2.8 Vegetation and Wetlands

Other mitigation measures under Soils and Water Resources of this EA would also apply to vegetation and wetlands.

1. File noxious weed monitoring forms with the BLM and implement, if necessary, a weed control and eradication program.

2. Evaluate all project facility sites for occurrence and distribution of waters of the U.S., special aquatic sites, and jurisdictional wetlands. All project facilities would be located out of these sensitive areas. If complete avoidance is not possible, minimize impacts through modification and minor relocations. Coordinate activities that involve dredge or fill into wetlands with the COE.

3. On BLM lands, an approved Pesticide Use Proposal would be obtained before the application of herbicides or other pesticides for the control of noxious weeds.

4. Disturbed areas would be seeded and stabilized in accordance with BLM-approved reclamation guidelines.

2.1.8.2.9 Wildlife

1. During reclamation, establish a variety of forage species that are useful to resident herbivores.

2. Prohibit unnecessary off-site activities of operational personnel in the vicinity of the drill sites. Inform all project employees of applicable wildlife laws and penalties associated with unlawful take and harassment.

3. Limit construction activities per BLM authorizations within big game crucial winter range from November 15 to April 30.

4. Complete a raptor survey of the ARPA prior to construction to ensure that well sites are located away from potential conflict areas.

5. Survey and clear well sites within one mile of raptor nests identified in the raptor survey prior to the commencement of drilling and construction during the raptor nesting period (February 1 through July 31).

6. When an `active' raptor nest is within 0.75 to one mile (depending on species and line of sight) of a proposed well site, restrict construction during the critical nesting season for that species.

7. Do not perform construction activities within 0.25 mile of existing sage grouse leks at any time.

8. Provide for sage grouse lek protection during the breeding, egg-laying and incubation period (March 1 - June 30) by restricting construction activities within a two-mile radius of active sage grouse leks. Exceptions may be granted if the activity would occur in unsuitable nesting habitat.

9. To eliminate any hazard to migratory birds or other wildlife, BLM would require netting (maximum 2 inch mesh) be installed over any pits identified as containing oil or toxic substances.

2.1.8.2.10 Special Status Species

<u>Special Status Plants</u>

1. Employ site-specific recommendations developed by the BLM IDT for staked facilities.

2. Minimize impacts due to clearing and soil handling.

3. Monitor and control noxious weeds.

4. Comply with Section 404(b)(1) guidelines of the federal Clean Water Act (CWA).

5. Perform clearance surveys for plant species of concern.

Special Status Animals

1. Implement measures discussed in Chapter 4 in compliance with the Endangered Species Act (ESA).

2. Prior to production of waters associated with CBM production in the SDPA, the proponent agrees to collect water data to determine if water from the Mesaverde Formation is connected to surface waters associated with the Colorado River System. Results of this analysis will be submitted to USFWS and BLM. If data indicates that there is a connectivity between the waters produced concurrent with CBM production and the Colorado River Basin system, and that the project will result in depletions, formal consultation will be initiated with USFWS.

2.1.8.2.11 Visual Resources

1. Utilize existing topography to screen roads, pipeline corridors, drill rigs, well heads, and production facilities from view.

2. Paint well and central facilities site structures with flat colors (e.g., Carlsbad Canyon or Desert Brown) that blend with the adjacent surrounding undisturbed terrain, except for structures that require safety coloration in accordance with Occupational Safety and Health Administration (OSHA) requirements.

2.1.8.2.12 Noise

1. Muffle and maintain all motorized equipment according to manufacturers' specifications.

2. In any area of operations (drill site, compressor site, etc.) where noise levels may exceed federal OSHA and MSHA safe limits, PEDCO would provide and require the use of proper personnel protective equipment by employees.

2.1.8.2.13 Recreation

Measures under Wildlife, Transportation, Soils, Health and Safety, and Water Resources of the EA apply to Recreation.

1. Minimize conflicts between project vehicles and equipment and recreation traffic by posting appropriate warning signs, implementing operator safety training, and requiring project vehicles to adhere to low speed limits.

2.1.8.2.14 Socioeconomics

1. Implement hiring policies that would encourage the use of local or regional workers who would not have to relocate to the area.

2. Coordinate project activities with ranching operations to minimize conflicts involving livestock movement or other ranch operations. This would include scheduling of project activities to minimize potential disturbance of large-scale livestock movements. Establish effective and frequent communication with affected ranchers to monitor and correct problems and coordinate scheduling.

3. PEDCO and its subcontrators would obtain Carbon County sales and use tax licenses for purchases made in conjunction with the project so that project-related sales and use tax revenues would be distributed to Carbon County.

2.1.8.2.15 Cultural Resources

1. If a site is considered eligible for, or is already on the National Register of Historic Places (NRHP), avoidance is the preferred method for mitigating adverse effects to that property.

2. Mitigation of adverse effects to cultural/historical properties that cannot be avoided would be accomplished by the preparation of a cultural resources mitigation plan.

3. If cultural resources are discovered at any time during construction, all construction activities would halt and the BLM Authorized Officer (AO) would be immediately notified. Work would not resume until a Notice to Proceed is issued by the BLM AO.

2.1.8.2.16 Health and Safety

Measures listed under Air Quality and Water Quality also apply to Health and Safety.

1. Sanitation facilities installed on the drill sites and any resident camp site locations would be approved by the WDEQ.

2. To minimize undue exposure to hazardous situations, require measures that would preclude the public from entering hazardous areas and place warning signs alerting the public of truck traffic.

3. Haul all garbage and rubbish from the drill site to a State-approved sanitary landfill for disposal. Collect and store any garbage or refuse materials on location prior to transport in containers approved by the BLM.

4. During construction and upon commencement of production operations, PEDCO would have a chemical or hazardous substance inventory for all such items that may be at the site. PEDCO would institute a Hazard Communication Program for its employees and would require subcontractor programs in accordance with OSHA 29 CFR 1910.1200. These programs are designed to educate and protect the employees and subcontractors with respect to any chemicals or hazardous substances that may be present in the work place. It would be required that as every chemical or hazardous material is brought on location, a Material Safety Data Sheet (MSDS) would accompany that material and would become part of the file kept at the field office as required by 29 CFR 1910.1200. All employees would receive the proper training in storage, handling, and disposal of hazardous substances.

5. Spill Prevention Control and Countermeasure Plans would be written and implemented as necessary in accordance with 40 CFR Part 112 to prevent discharge into navigable waters of the United States.

6. Chemical and hazardous materials would be inventoried and reported in accordance with the Superfund Amendments and Reauthorization Act (SARA) Title III. 40 CFR Part 335, if quantities exceeding 10,000 pounds or the threshold planning quantity (TPQ) are to be produced or stored in association with the Proposed Action. The appropriate Section 311 and 312 forms would be submitted at the required times to the State and County Emergency Management Coordinators and the local fire departments.

7. Any hazardous wastes, as defined by the Resource Conservation and Recovery Act (RCRA), would be transported and/or disposed of in accordance with all applicable federal, state, and local regulations.

2.2 ALTERNATIVE A - NO ACTION

Section 1502.14(d) of the NEPA requires that the alternatives analysis "include the alternative of no action". "No Action" implies that on-going natural gas production activities would be allowed to continue by the BLM in the SDPA, but the proposed field development program (Proposed Action) would be disallowed. Approved disturbances (initially 19.0 ac; LOP 14.5 ac) associated with the recently approved four CBM wells, one injection well, and associated facilities will be considered under the No Action Alternative. Additional APD's and ROW actions would be considered by the BLM for federal land on a case-by-case basis consistent with the scope of existing environmental analysis. Transport of natural gas products would be allowed from those wells within the SDPA that are currently productive. Additional gas development could occur on private lands within the project area under APD's approved by the WOGCC.

The U.S. Department of the Interior's (USDI) authority to implement a "No Action" alternative is limited because the public lands have already been leased. An explanation of this limitation and the discretion the USDI has in this regard follows.

- An oil and gas lease grants the lessee the "right and privilege to drill for, mine, extract, remove and dispose of all oil and gas deposits" in the leased lands, subject to the terms and conditions incorporated in the lease (Form 3110-2). Because the Secretary of the Interior has the authority and responsibility to protect the environment within federal oil and gas leases, restrictions are imposed on the lease terms.

- Leases within the SDPA contain various stipulations concerning surface disturbance, surface occupancy and limited surface use. In addition, the lease stipulations provide that the USDI may impose "such reasonable conditions, not inconsistent with the purposes for which [the] lease is issued, as the [BLM] may require to protect the surface of the leased lands and the environment." None of the stipulations, however, would empower the Secretary of the Interior to deny all drilling activity because of environmental concerns.

- Provisions in leases that expressly provide Secretarial authority to deny or restrict APD development in whole or in part would depend on an opinion provided by the U.S. Fish and Wildlife Service (FWS) regarding impacts to endangered or threatened species or habitats of plants or animals that are listed or proposed for listing (e.g., bald eagle). If the FWS concludes that the Proposed Action and alternatives would likely jeopardize the continued existence of any endangered or threatened plant or animal species, then the APD(s) and Atlantic Rim development may be denied in whole or in part.

2.3 ALTERNATIVES CONSIDERED BUT NOT ANALYZED IN DETAIL

The proposed action was developed around measures provided in the Interim Drilling Policy - Development Authorized Concurrent with EIS Preparation for the Atlantic Rim Coalbed Methane Project. Authorizations provided in the interim drilling policy limit the selection of other alternatives. As a result, no other alternatives to the proposed action were considered.

CHAPTER 3

AFFECTED ENVIRONMENT

3.0 INTRODUCTION

The Affected Environment chapter of this environmental assessment (EA) for the proposed Sun Dog coalbed methane project discusses environmental, social, and economic factors as they currently exist within the Sun Dog project area (SDPA). The material presented here has been guided by management issues identified by the Bureau of Land Management (BLM), Great Divide Resource Area (GDRA); public scoping; and by interdisciplinary field analysis of the area.

This proposal could potentially affect critical elements of the human environment as listed in BLM's National Environmental Policy Act (NEPA) Handbook H-1790-1 (USDI-BLM 1988). The critical elements of the human environment, their status in the SDPA and their potential to be affected by the proposed project are listed in Table 3-1.

Table 3-1. Critical Elements of the Human Environment[1], Sun Dog Pod Coalbed Methane Project, Carbon County, Wyoming, 2001.

Element	Status on the SDPA	Addressed in text of EA
Air quality	Potentially affected	Yes
Areas of critical environmental concern	None present	No
Cultural resources	Potentially affected	Yes
Environmental justice	Potentially affected	Yes
Prime or unique farmlands	None present	No
Floodplains	None present	No
Native American religious concerns	Potentially affected	Yes
Noxious weeds	Potentially affected	Yes
Threatened and endangered species	Potentially affected	Yes
Hazardous or solid wastes	Potentially affected	Yes
Water quality (surface and ground water)	Potentially affected	Yes
Wetlands/riparian zones	Potentially affected	Yes
Wild and scenic rivers	None present	No
Wilderness	None present	No

[1] As listed in BLM *National Environmental Policy Act Handbook H-1790-1* (BLM 1988b) and subsequent Executive Orders

CHAPTER 3: AFFECTED ENVIRONMENT

In addition to the critical elements, this EA discusses potential effects of the project on range resources, transportation, geology/minerals/paleontology, soils, fisheries, vegetation, wildlife, special status species, visual resources, noise, recreation, socioeconomics, and health and safety.

3.1 GEOLOGY/PALEONTOLOGY

3.1.1 Geology

3.1.1.1 Regional Geologic Overview

The SDPA occupies the southeastern portion of the Greater Green River Basin, a large intermontane structural and topographic basin that is part of the Wyoming Basin Physiographic Province. The Greater Green River Basin began developing about 70 million years ago and filled with sediments eroded from surrounding highlands and mountains during the late Cretaceous and early Tertiary Periods.

The SDPA lies along the eastern edge of the Washakie Basin, at the junction with the Sierra Madre Uplift and is underlain at the surface by the Lewis Shale of Late Cretaceous age. The Lewis Shale consists of a thick sequence of shale, siltstone and sandstone that accumulated in deltaic, interdeltaic, and marginal marine environments in a shallow epicontinental sea that extended northward from the Gulf of Mexico to the Arctic Ocean in the Maestrichthian (Winn et al. 1985a, 1985b, 1985c).

By Latest Cretaceous time this seaway had retreated eastward and the marine deposits of the Lewis Shale was replaced progressively upward by beach and estuarine and continental deposits of the Fox Hills Sandstone and Lance Formation respectively that spread westward in response to the Sevier and Laramide orogenies. The Laramide orogeny, resulted locally in the uplift of the Sierra Madre and the subsidence of the Washakie Basin. The latter was filled with Tertiary deposits of the Fort Union and Wasatch Formations during Paleocene and Eocene time, respectively.

In places along the modern Muddy Creek and Cow Creek and atop modern terraces and buttes, the Lewis Shale is overlain by a thin veneer of much younger, unconsolidated sediments of Quaternary age. These sediments include alluvium, colluvium, stream terrace gravels, and wind-blown sand that are late Pleistocene to Holocene in age.

Late Cretaceous rocks at the surface and underlying the SDPA consist of a complex sequence of sedimentary units, including sandstone, shale, coal, and carbonaceous shale. They were predominantly shed from the Sevier orogenic belt to the west and deposited along the western edge of the interior Cretaceous sea (Roehler 1990). Deposition occurred predominantly during two major transgression-regression periods of the sea.

Underlying the Lewis Shale in the SDPA is the Mesaverde Group which contains abundant carbonaceous shale and coal. The Mesaverde Group, which outcrops along the western slope of the Sierra Madre Uplift, is more than 2,500 feet thick. Resistant sandstone beds of the Mesaverde Group form the Atlantic Rim escarpment located immediately north of the project area. The Mesaverde Group is overlain by the Lewis Shale and the Lance Formation in the western portion of the SDPA.

Numerous thin coal seams are present in the upper Almond Formation, a member of the Mesaverde Group. These coal beds are targeted as having the greatest potential for CBM production. The lateral continuity of the Almond coal seams is variable (Hamilton 1993). Geophysical logs of CBM test wells within the SDPA indicate that the Almond coal beds are somewhat discontinuous laterally, however, data for coal seam correlation is limited.

Late Cretaceous and younger surface rocks are underlain by Phanerozoic sedimentary rock that ranges from Cretaceous to Cambrian in age. The Phanerozoic sediments are underlain by Precambrian metamorphic bedrock that comprises part of the ancient North American cratonic shield.

3.1.1.2 Mineral Resources

The three primary mineral commodities in Carbon County are coal, natural gas, and oil (Hoffman and Nunley 2000). All three occur in the SDPA, although coal mining has been of least significance to date. Additional mineral resources occurring within the SDPA include uranium, construction aggregate, and geothermal resources.

Coal reserves in the Greater Green River Basin have been estimated at nearly 1,300 trillion tons (Scott et al. 1995). In the Washakie Basin, coal occurs in the Mesaverde Group and the Fort Union Formation. Within the SDPA, coal primarily occurs within the Almond Formation of the upper Mesaverde. It is sub-bituminous to high-volatile C bituminous in rank (Tyler et al, 1996). Coincident with the Fort Union and Mesaverde coal seams of the Washakie Basin are significant quantities of CBM. Scott (et al. 1994) estimate total reserves in the Greater Green River Basin at approximately 300 trillion cubic feet. Two CBM fields have been explored for CBM resources in the eastern Washakie Basin; the Dixon Field (T12N, R90W), and the Cow Creek Field (T16N, R92W), both of which target Mesaverde coal seams.

3.1.1.3 Geologic Hazards

Potential geologic hazards include landslides, subsidence, and known or suspected active faults. Landslide potential is greatest in areas where steep slopes occur, particularly where the geologic dip of rock formations is steep and parallel to slope, or where erosional undercutting may occur. Landslides occur east of the project area in steeper regions of the Sierra Madre but none have been mapped in the project area (Case and Larsen 1991). Slope gradients are mild to steep in the area and are steepest along Muddy Mountain, Browns Hill, Ketchum Buttes, Cow Creek Butte, and Wild Horse Butte. Although not specifically mapped, unstable soils in these steep areas may be susceptible to slumping, sliding, and soil creep. Generally, slope gradients within the SDPA are best described as mild.

3.1.2 Paleontology

Paleontologic resources include the remains or traces of any prehistoric organism which has been preserved by natural processes in the Earth's crust (BLM Information Bulletin WY-93-371). Energy minerals such as coal, oil shale, lignite, bitumen, asphaltum, and tar sands, as well as some industrial minerals such as phosphate, limestone, diatomaceous earth, and coquina, while of biologic origin are not considered fossils in themselves. However, fossils of scientific interest may occur within or in association with such materials. Fossils of scientific interest include those of particular interest to professional paleontologists and educators. Vertebrate fossils are always

considered to be of scientific interest. Other kinds of fossils may be placed in this category by the State Director, and field managers, in consultation with BLM staff paleontologists or other expertise.

Paleontologic resources within sedimentary deposits in the project area record the history of animal and plant life in Wyoming during the Late Cretaceous- the time represented by the Lewis Shale. The Lewis Shale is known to yield scientifically significant vertebrate fossils in several areas of Wyoming, but no specific localities have been reported from the SDPA. Fossils known from the Lewis comprises a large and varied marine invertebrate fauna, including many genera of bivalves, baculites, scaphites, and ammonites (Gill et al. 1970) and isurid shark teeth (Breithaupt 1985). Although significant fossils are known from the Lewis Shale from some areas of Wyoming so the formation satisfies BLM Condition 2, which may require additional consideration, the potential for discovery of scientifically significant fossils in the SDPA is consider to be moderate to low, when compared to other Late Cretaceous age formations of Wyoming.

3.2 CLIMATE AND AIR QUALITY

3.2.1 Climate

The SDPA is located in a semiarid (dry and cold), mid-continental climate regime. The area is typified by dry, windy conditions, with limited rainfall and long, cold winters. The nearest meteorological measurements were collected at Baggs, Wyoming (1979-present), approximately 20 miles southwest of the project area at an elevation of 6,240 feet (WRCC 2001).

The annual average total precipitation at Baggs is 11.20 inches, ranging from 18.5 inches (1983) to 4.63 inches (1989). Precipitation is evenly distributed throughout the year, with minor peaks in May, July, and October. An average of 41.3 inches of snow falls during the year (annual high 104.0 inches in 1983), with December and January the snowiest months. In the project area, annual average precipitation is about 8 to 9 inches, based on local BLM precipitation information and NCRS range site descriptions.

Temperatures are generally cooler, frost-free periods shorter, and both precipitation and snowfall greater at higher elevations. The region is typically cool, with average daily temperatures ranging between 5 °F (low) and 33 °F (high) in mid winter and between 48 °F (low) and 86 °F (high) in mid summer. Extreme temperatures have ranged from –50 °F to 100 °F (both occurring in 1984). The frost-free period (at 32 °F) generally occurs from mid-May to mid-September.

The project area is subject to strong and gusty winds, reflecting channeling and mountain valley flows due to complex terrain. During the winter months strong winds are often accompanied by snow, producing blizzard conditions and drifting snow. The closest comprehensive wind measurements are collected at the Rawlins, Wyoming airport nearly 60 miles north-northeast of the project area. However, hourly wind data measurements for December 1994 through November 1995 were collected near Baggs, Wyoming during the Mount Zirkel Wilderness Area Visibility Study. Winds originate from the south to southwest nearly 37 percent of the time. The annual mean wind speed is nearly 10 mph.

The frequency and strength of the winds greatly affects the dispersion and transport of air pollutants. Because of the strong winds in the project area, the potential for atmospheric dispersion is relatively high (although nighttime cooling will enhance stable air, inhibiting air pollutant mixing

and transport). Dispersion conditions will be the greatest to the north and along the ridge and mountain tops.

Mean annual evaporation ranges from 55 inches (lake) to 75 inches (pan) and potential annual evapotranspiration is 20 inches (Martner 1986). Compared to the average annual precipitation of 11 inches, this gives an average annual deficit of approximately 9 inches. These meteorological and climatological characteristics of the project area combine to produce a predominantly dry climate where evaporation exceeds precipitation.

3.2.2 Air Quality

Although specific air quality monitoring is not conducted throughout project area, air quality conditions are likely to be very good, as characterized by limited air pollution emission sources (few industrial facilities and residential emissions in the relatively small communities and isolated ranches) and good atmospheric dispersion conditions, resulting in relatively low air pollutant concentrations.

The Wyoming and National Ambient Air Quality Standards set absolute upper limits for specific air pollutant concentrations at all locations where the public has access. The New Source Review-Prevention of Significant Deterioration (PSD) Program is designed to limit the incremental increase of specific air pollutant concentrations above a legally defined “baseline” level (depending on the location’s classification). Incremental increases in PSD Class I areas are strictly limited, while increases allowed in Class II areas are less strict. The SDPA and the surrounding areas are classified as PSD Class II. Four PSD Class I areas, the Bridger, Fitzpatrick, Mount Zirkel, and Rawah Wilderness Areas, exist in the region and could be impacted by cumulative project source emissions.

All NEPA analysis comparisons to the PSD Class I and II increments are intended to evaluate a “threshold of concern,” and do not represent a regulatory “PSD Increment Consumption Analysis.” The determination of PSD increment consumption is an air quality regulatory agency responsibility (with EPA oversight). Such an analysis would be conducted as part of a major New Source Review, including a Federal Land Management Agency’s evaluation of potential impacts to Air Quality Related Values (AQRV) such as visibility, aquatic ecosystems, flora, fauna, etc. A “PSD Increment Consumption Analysis” may also be performed by the responsible air quality regulatory agency (or by EPA) in order to determine minor source increment consumption.

While no criteria air pollutant concentration monitoring has occurred in the project area, background values measured in the region are well below established standards. Measured air pollutants include: carbon monoxide (CO), nitrogen dioxide (NO_2), ozone, particulate matter less than 10 microns in effective diameter (PM-10), and sulfur dioxide (SO_2). Assumed background air pollutant concentrations, applicable Wyoming and National Ambient Air Quality Standards, and PSD Class I and II increments (measured in micrograms per cubic meter, or $\mu g/m^3$) are provided in Table 3-2.

The background concentration data were provided by the Wyoming Department of Environmental Quality, Air Quality Division (WDEQ-AQD1997) and Colorado Department of Public Health and Environment, Air Pollutant Control Division (CDPHE-APCD; 1996). These values reflect the most recently available air quality monitoring data collected in the vicinity of the SDPA. An estimate of background air quality concentrations is needed to combine with modeled project-related air quality impacts and to compare the total predicted impacts with applicable air quality standards. It is important that each pollutant’s background concentration, model predictions, and air quality standards are all based on the same averaging times.

Table 3-2. Air Pollutant Background Concentrations, State and Federal Ambient Air Quality Standards, and PSD Increments (ug/m^3)

Pollutant/Averaging Time	Measured Background Concentration	State and National Ambient Air Quality Standards	Incremental Increase Above Legal Baseline PSD Class I	Incremental Increase Above Legal Baseline PSD Class II
Carbon Monoxide (CO)				
1-hour	2,299 a	40,000	n/a	n/a
8-hour	1,148 a	10,000	n/a	n/a
Nitrogen Dioxide (NO_2)				
Annual	10 b	100	2.5	25
Ozone				
1-hour	117 c	235	n/a	n/a
Particulate Matter (PM-10)				
24-hour	20 c	150	8	30
Annual	12 c	50	4	17
Sulfur Dioxide (SO_2)				
3-hour (National)	29 e	1,300	25	512
24-hour (National)	18 e	365	5	91
24-hour (Wyoming)	18 e	260	n/a	n/a
Annual (National)	5 e	80	2	20
Annual (Wyoming)	5 e	60	n/a	n/a

Note: Measured background ozone concentration data is top tenth percentile maximum 1-hour value; other short-term background concentrations are second-maximum measured values.
n/a not applicable
Wyoming Ambient Standards from: Wyoming Air Quality Standards and Regulations, Chapter 2– Ambient Standards
National Ambient Standards from: 40 CFR Part 50
PSD Increments from: 40 CFR Parts 51 and 52 Prevention of Significant Deterioration for Particulate Matter, EPA Final Rule. Federal Register Vol. 58, No. 105, Thursday, June 3, 1993.

Background Air Quality Data Sources:

a Data collected at Rifle and Mack, Colorado, in conjunction with proposed oil shale development during early 1980's (CDPHE-APCD 1996).

b To supplement monitored NO_2 data, separate NO2 modeling analysis was performed, including many oxides of nitrogen (NOx) emission sources (USDI-BLM 1996).

c Data collected UCG Project, 9 miles west of Rawlins, Wyoming, June 1994 – November 1994 (WDEQ-AQD 1997).

d Data collected at Chevron Chemical Company Phosphate Project, 4.5 miles southeast of Rock Springs, Wyoming, 1984 (Cote 1984).

e Data collected at Craig Power Plant site and at Colorado oil shale areas (CDPHE-APCD 1996).

Continuous visibility-related optical background data were collected at the PSD Class I Bridger Wilderness Area in Wyoming and the PSD Class I Rocky Mountain National Park (just south of the PSD Class I Rawah Wilderness Area) in Colorado, as part of the Interagency Monitoring of PROtected Visual Environments (IMPROVE) program. Visibility in the Central Rocky Mountains is very good (averaging over 70 miles Standard Visual Range), with fine particle impacts accounting for nearly half of the average degradation (Sisler 1996). In addition, background atmospheric deposition (acid rain) impacts were monitored at the National Acid Deposition Program/National Trends Network sampling station near Pinedale, Wyoming, and site-specific lake chemistry (pH, acid neutralizing capacity, elemental concentrations, etc.) background data have been collected by the U.S. Geological Survey (Water Quality Division) in several high mountain lakes in the nearby wilderness area.

The WDEQ-AQD is the primary air quality regulatory agency responsible (under their EPA approved State Implementation Plan) for determining potential impacts once detailed development plans have been made, subject to applicable air quality laws, regulations, standards, control measures and management practices. Therefore, the State of Wyoming has the ultimate responsibility for reviewing and permitting SDPA air pollutant emission sources before they become operational. Unlike the conceptual “reasonable, but conservative” engineering designs used in this NEPA analysis, the WDEQ-AQD air quality preconstruction permitting would be based on very site-specific, detailed engineering values, available as part of the permit application.

3.3 SOILS

The soils in this portion of Carbon County were studied and mapped to an Order 3 scale by the BLM in 1979 and 1980. This survey covers the proposed project area. Natural Resource Conservation Service (NRCS) mapping is available in this portion of Carbon County on a contracted basis of agricultural lands. No lands within the proposed project area were generally part of any NRCS mapping. Only BLM information was utilized.

The soil survey for the SDPA was initially divided into two tasks: (1) verify existing Order 3 mapping units where existing mapping was available, and (2) gather soil samples on proposed surface disposal areas for laboratory analyses. The primary purpose was to verify existing soil series and to determine the reclamation potential of each series, as mapped. However, based on the decision to not utilize surface disposal of produced water, Task 2 was deleted.

Soil series within the survey area were verified according to previously established information, i.e., previously established soil series or mapping units, wherever possible.

The predominant map units in the SDPA were Absher-Forelle complex and Rallod-Abston-Pinellie complex. Absher-Forelle complex is on nearly level and gently sloping footslopes and alluvial fans. Slopes are smooth. Rallad-Abston-Pinelliis is on underlying to hilly residual uplands on shale bedrock. Slopes are predominantly convex with concave slopes along drainageways. Most have aridic moisture regimes and frigid temperature regimes. In other words, climates are usually dry and cold. According to established range site descriptions for the associated soil series descriptions, 10-14 inches of rainfall occur during the year, with an average air temperature of 35-40 degrees Fahrenheit.

Plant growth begins about April 15 and continues to about July 15. Fall growth will usually occur if moisture is available. Because of the high, dry air, nighttime radiation cooling can produce freezing temperatures any month of the year. The climax plant community is characterized by

plants with high tolerance to salt and capable of withstanding drought conditions. The potential plant communities on the Absher and Rallod soils are mainly western wheatgrass, bottlebrush squirreltail, Indian ricegrass, and Gardner saltbrush. The vegetation of this area is a mixture of 55% grasses and grass-like plants, 5% forbs, and 40% woody plants.

The Absher-Forelle complex map unit is 50% Absher silty clay and 30% Forelle loam. The Rallod-Abston-Pinelli complex map unit is 40% Rallod clay, 25% Abston clay and 20% Pinelli loam. In general, the soils in this area may be light or dark colored and usually exceed 20 inches in depth. The topsoil is high in exchangeable salt and/or sodium. Internal water movement and permeability is slow to moderate. Soil genesis classification of the majority of soils within this area are haplargids, torriorthents, camborthids, natrargids, and torrifluvents.

Runoff is medium to rapid and the hazard of water erosion is moderate to severe. The hazard of soil blowing is moderate. In addition to these physical limitations of the soils in many areas, chemical limitations exist primarily in terms of salinity or sodium affected soils.

A list of the BLM map units found in and adjacent to the SDPA is presented in Table 3-3:

Table 3-3. BLM Map Units Found in and Adjacent to the SDPA

Mapping Unit Number	Mapping Unit Description
225	Cushool-Rock River sandy loams, 3-10%
232	Blazon-Delphill-Diamondville complex, 6-30%
234	Rock River-Ryark-Cushool complex, 3-15%
237	Seaverson-Blazon complex, 3-15%
247	Cushool-Diamondville-Worfman complex, 3-15%
273	Elk Mountain-Yamac Variant sandy loams, 0-15%
289	Absher-Forelle complex, 1-6%
295	Rallod-Abston-Pinelli complex, 2-25%
333S	Laclede alkali-Laclede complex, 0-3%
449	Dines-Dines overflow complex, 0-2%

3.4 WATER RESOURCES

Water resources in the project area include both surface water and groundwater. Surface waters include the perennial Little Snake River, the intermittent to perennial Muddy Creek, ephemeral Dry Cow Creek and several unnamed ephemeral channels and man-made ponds. Groundwater resources include free water contained within relatively shallow aquifers that are or could be utilized for culinary, agricultural, and/or industrial purposes. The occurrence and distribution of water resources in the project area are dependent on climate, soils, and structural geology.

3.4.1 Surface Water

3.4.1.1 Quantity

The project area is located within the Little Snake River drainage basin. Dry Cow Creek, an ephemeral tributary to Muddy Creek, is found within the project area. Muddy Creek is an intermittent to ephemeral stream that carries water most of the year to its confluence with the Little Snake River near Baggs.

The Little Snake River drains the largest basin in the Yampa River basin (Driver et al. 1984). It joins the Yampa River in northwest Colorado. The Yampa River flows southwest to its confluence with the Green River in Utah. The Green River drains to the Colorado River, which drains to the Pacific Ocean.

Annual peak flows for all streams within the project area generally occur in late May through early June in response to snowmelt. Baseflows are reached in the fall and continue through March until low elevation snowmelt initiates the rising limb of the hydrograph. A United States Geological Survey (USGS) continuous gaging station on the Little Snake River near Dixon recorded a maximum peak discharge of approximately 13,000 cfs on May 16, 1984, while minimum flows of near 0 cfs occur in late summer and early fall at the end of the irrigation season (Druse et al. 1994).

3.4.1.2 Quality

There are six USGS surface water quality stations in and around the project area, including two on the Little Snake River, two on Muddy Creek, and one each on Cow Creek and Dry Cow Creek. Average sample data from each of the stations are shown on Table 3-4. The data suggest that

surface waters in the project area are of moderately high pH (8.1 to 9.2) and moderately dissolved oxygen (9 to 11 mg/l).

Generalizations among other sample parameters are made difficult by high variability between stations. Trends become apparent, however, when the stations are divided according to the surface water designation. Table 3-5 averages select parameters from Table 3-4 into ephemeral, intermittent, and perennial classes.

Water quality in ephemeral streams is represented by the Cow Creek and Dry Cow Creek monitoring stations. The ephemeral quality is characterized by high TDS (1,620 mg/l) and sodium and bicarbonate dominance as the major dissolved ions. Sodium dominance is reflected in the relatively high sodium adsorption ratio (SAR) of 14.1.

The two Muddy Creek monitoring stations represent intermittent surface water quality. Muddy Creek has actually been classified as an intermittent to perennial stream (Higley 1996), but its classification has been simplified for Table 3-5. Intermittent streams in the project area are characterized by moderate TDS (772 mg/l) and the replacement of bicarbonate by sulfate as the major anionic species. Sodium dominance is reflected in the SAR of 6.1, but is less marked than in ephemeral flows.

Two Little Snake River stations monitor perennial water quality in the project area. Perennial quality is characterized by a significantly reduced TDS (201 mg/l) from intermittent and ephemeral

Table 3-4. Surface Water Quality in the Project Area

	USGS Surface Water Quality Station[1]					
	Cow Creek	Dry Cow Creek	Muddy Creek	Muddy Creek	Little Snake River	Little Snake River
Station Number	09115080	09258200	09258900	09259000	09257000	09259050
Sample Period	1978-1979	1975-1980	1976-1978	1957-1991	1957-1988	1980-1997
Number of Samples[2]	20	9	3	41	107	100
pH, standard units	9.2	8.6	8.6	8.2	8.1	8.1
Conductance, mmhos/cm	2925	2162	1350	966	259	366
Total Dissolved Solids[3]	1801	1438[4]	913	630[4]	158	243
Suspended Solids	133	1111	6198	3191	154	228
Turbidity	284 NTU	1013 JTU	1260 NTU	NM[5]	13 JTU	167 NTU
Hardness as $CaCO_3$	174	37	315	270	111	151
Oxygen	9	11	11	10	9	10
Sodium	560	98	200	286	11	26
Calcium	19	9	54	42	30	34
Magnesium	31	4	44	40	8	12
Potassium	11	4	7	9	2	2
Bicarbonate	870	170	373	308	159	190
Carbonate	186	4	0.5	NM	0	1
Sulfate	181	65	380	320	25	54
Chloride	132	21	65	32	3	2
Fecal coliform, #/100 ml	535	NM	NM	8	NM	351

[1] Data available on the Internet at http://www.wrds.uwyo.edu
[2] Total number of grab samples analyzed; not every parameter was analyzed in every sample
[3] All units are mg/l except as noted
[4] TDS calculated from specific conductance due to lack of sample data
[5] NM = not measured

streams. Sodium is also displaced by calcium as the major cationic species. This is reflected in the low SAR (0.7 mg/l).

The WDEQ classifies Wyoming streams according to quality and degree of protection. Four classes have been identified as follows (WDEQ 2000):

Class 1: Those surface waters in which no further water quality degradation by point source discharges other than from dams will be allowed. Nonpoint sources of pollution shall be controlled through implementation of appropriate best management practices. Considerations employed during the designation of these waters include water quality, aesthetic, scenic, recreational, ecological, agricultural, botanical, zoological, municipal, industrial, historical, geological, cultural, archaeological, fish and wildlife, the presence of significant quantities of developable water and other values of present and future benefit to the people.

Table 3-5. Surface Water Quality Comparison

	Stream Class		
	Ephemeral	**Intermittent**	**Perennial**
Representative Surface Waters	Cow Creek and Dry Cow Creek	Muddy Creek	Little Snake River
Total Dissolved Solids[1]	1,620	772	201
Sodium	329	243	19
Calcium	18	42	10
Magnesium	14	48	32
Potassium	8	8	2
Bicarbonate	520	341	175
Carbonate	95	0.5	0.5
Sulfate	123	350	40
Chloride	77	49	3
SAR	14.1	6.1	0.7

[1] All units are mg/l except SAR, which is unitless

Class 2: Surface water other than Class 1 determined to be presently supporting game fish, have the hydrologic and natural water quality potential to support game fish, or include nursery areas or food sources for game fish.

Class 3: Those surface waters, other than those classified as Class 1, which are determined to be presently supporting nongame fish only, have the hydrologic and natural water quality potential to support nongame fish only, or include nursery areas or food sources for nongame fish only.

Class 4: Those surface waters, other than those classified as Class 1, which are determined to not have the hydrologic or natural water quality potential to support fish and include all intermittent and ephemeral streams.

Dry Cow Creek has been classified as a Class 4 stream. Cow Creek is classified as a Class 3 stream. The Little Snake River and Muddy Creek are designated Class 2. The portion of the Little Snake River below Baggs has been further classified as a secondary body contact recreation water. This classification adds fecal coliform restrictions normally reserved for Class 1 water bodies.

3.4.1.3 Waters of the U.S.

Most of the surface water features in the project area qualify as Waters of the United States. Waters of the U.S. include territorial seas; interstate waters; navigable waterways (such as lakes, rivers, and streams); special aquatic sites and wetlands that are, have been, or could be used for travel, commerce, or industrial purposes; tributaries; and impoundments of such waters. All channels that carry surface flows and that show signs of active water movement are waters of the U.S. Similarly, all open bodies of water (except ponds and lakes created on upland sites and used exclusively for agricultural and industrial activities or aesthetic amenities) are waters of the U.S. (EPA 33 CFR § 328.3(a)). Such areas are regulated by the EPA and COE. Many of the drainage channels

identified on the USGS topographic maps are vegetated swales which are not considered to be waters of the U.S. by the COE. Any activity that involves discharge of dredge or fill material into or excavation of such areas is subject to regulation by the COE pursuant to Section 404 of the CWA. Activities that modify the morphology of stream channels are also subject to regulation by the SEO of Wyoming. Special aquatic sites and wetlands are discussed in greater detail in the Vegetation Section 3.5.

3.4.2 Groundwater

The project area occurs in the Colorado Plateau and Wyoming Basin groundwater regions described by Heath (1984); the Upper Colorado River Basin groundwater region described by Freethey (1987); or Washakie Basin described by Collentine et al. (1981) and Welder and McGreevy (1966). Groundwater resources include deep and shallow, confined and unconfined aquifers. Site-specific groundwater data for the project area are limited. Existing information comes primarily from oil and gas well records from the WOGCC, water-well records from the Wyoming SEO, and from the USGS (Weigel 1987). Regional aquifer systems pertinent to the project area are discussed by Heath (1984), Freethey (1987), and Driver et al. (1984). Basin-wide evaluations of hydrogeology specific to the project area have been investigated by Collentine et al. (1981). The most relevant hydrogeologic study specific to the project area is by Welder and McGreevy (1966).

3.4.2.1 Location and Quantity

Groundwater in the Washakie Basin is generally found in artesian aquifers, although it is also present in unconfined alluvial valleys and in isolated, saturated outcrops (Welder and McGreevy, 1966). Table 3-6 summarizes the water-bearing characteristics of the geologic formations present in the project vicinity. Of the geologic units listed in the table, Welder and McGreevy (1966) suggest that those capable of producing the greatest quantity of water include the following: Quaternary alluvium; Tertiary deposits in the Browns Park, Wasatch, and Fort Union formations; Cretaceous formations, including Mesaverde, Frontier, and Cloverly; the Sundance-Nugget

Sandstone of the Jurassic Age; and the Tensleep and Madison formations of the Paleozoic Era. Following is a brief description of the major aquifers of the project area.

Quaternary aquifers in the Washakie Basin are comprised of alluvial deposits along major floodplains and isolated windblown and lake sediments. The major Quaternary aquifers in the vicinity of the project area occur in alluvial deposits along the Little Snake River and Muddy Creek, and in windblown segments along the Sand Hills. Groundwater flow within the sandy Quaternary aquifers is typically downward toward permeable underlying formations (Collentine et al. 1981).

Tertiary aquifers in and near the project area occur in the Browns Park Formation along the Little Snake River flood plain and adjacent to the Sierra Madre Uplift, the Fort Union Formation near the Muddy Creek flood plain to the west, and isolated Wasatch Formation outcrops near the center of the project area. Groundwater generally flows west-southwest from the higher elevations along the Sierra Madre Uplift toward the low-lying Washakie Basin center and the major streams (Collentine et al. 1981).

Cretaceous aquifers in the project area occur in three major geologic formations. From youngest to oldest they are the Almond Formation of the Mesaverde Group, the Frontier Formation, and the

Table 3-6. Water-Bearing Characteristics of Geologic Formations in the Washakie Basin[1]

Era	Period	Geologic Unit	Thickness	Hydrologic Properties		
				Well Yield (gpm)	Transmissivity (gpd/ft)	Permeability (gpd/ft^2)
Cenzoic	Quaternary		0-70	<30	168-560	21-62
	Tertiary	Browns Park Fm.	0-1,200	3-30	100-10,000	NM
		Wasatch Fm.	0-4,000+	30-50	150-10,000	0.04-18.2
		Fort Union Fm.	0-2,700+	3-300	<2,500	<1
Mesozoic	Upper Cretaceous	Lance Fm.	0-4,500+	<25	<20	0.007-8.2
		Fox Hill Sandstone	0-400	NM	10-20	0.9
		Lewis Shale	0-2,700+	2-25[2]	0.03-50	0.002-0.9
		Almond Fm.[3] (Mesaverde Group)	0-600	NM	2,000-8,000	100-800
		Mesaverde Group (excl. Almond Fm.)	300-2,800	<100	<3,000	NM
		Baxter Shale (incl. Steele Shale and Niobrara Fm.)	2,000-5,000+	Major regional aquitard between Mesaverde and Frontier aquifers. Hydrologic data unavailable.		
		Frontier Fm.	190-1,1900+	1-100+	<100-6,500	NM
	Lower Cretaceous	Mowry Shale	150-525	Regional aquitard. Hydrologic data unavailable.		
		Thermopolis Shale (incl. Muddy Sandstone)	20-235	Considered a leaking confining unit. Hydrologic data unavailable.		
		Cloverly Fm.	45-240	25-120	340-1,700	1-177
	Upper Jurassic	Morrison Fm.	170-450+	Confining unit between Cloverly and Sundance-Nugget aquifers. Hydrologic data unavailable.		
		Sundance Fm.	130-450+	27-35	12-3,500	NM
	Lower Jurassic-Upper Triassic	Nugget Sandstone	0-650+	35-200	<2,166	NM
	Triassic	Chugwater Fm.	900-1,500+	Confining unit between Sundance-Nugget and Paleozoic aquifers. Hydrologic data unavailable.		
Mesozoic-Paleozoic	Lower Trassic Permian	Phosphoria Fm. (incl. Goose Egg Fm.)	170-460	Probable poor water-bearing capabilities due to low permeability. Hydrologic data unavailable.		
Paleozoic	Permian-Pennsylvanian	Tensleep Fm.	0-840+	24-400	1-374	NM
	Lower and Middle Pennsylvanian	Amsden Fm.	2-260+	Probable poor water-bearing capabilities due to predominance of fine-grained sediments.		
	Mississippian	Madison Limestone	5-325+	<400	Variable	NM
Paleozoic	Cambrian	Indef. rocks	0-800+	4-250	NM	NM
Precam-brian	N/A	Igneous and metamorphic rocks	Unknown	10-20	1<1,000	Generally high in upper 200 ft of unit

[1] Adapted from Table V-1 in Collentine et al. (1981). Formations not encountered in project area have been omitted.
[2] From well completion records on file with SEO
[3] From Atlantic Rim CBM well test data

Cloverly Formation. The Mesaverde is exposed along the eastern slopes of the project area, although a mantle of Tertiary deposits unconformably overlies large areas of the Late Cretaceous strata. No outcrops of the Frontier or Cloverly formations are present within the project area.

The Cretaceous aquifers are composed of interbedded sandstone, shale, and coal and have demonstrated considerable yields in existing wells (Collentine et al. 1981). Recharge to these water-bearing strata is principally from precipitation infiltration and the movement of groundwater from the overlying Tertiary sediments at their outcrops and subcrops along the elevated eastern margin of the Washakie Basin. Regional groundwater flow direction is toward the west in response to the structural dip and surface topography. The Almond Formation coal seams, which are the targeted reservoir for the SDPA, are classified as confined to semi-confined aquifers because they are bound by impervious to semi-pervious layers of shale and siltstone. CBM test wells completed in the Almond Formation coal seams located within the project area exhibit shut-in hydrostatic pressures indicative of flowing artesian conditions. Based on existing hydrogeologic information, groundwater in the Almond Formation coal seams at the completions depths in the existing CBM wells is hydraulically isolated from shallow groundwater and surface water resources. This supports the potential for groundwater discharge in the form of springs along the eastern margin of the Washakie Basin. In fact, the Mesaverde Group is a source of many springs along the Atlantic Rim and flowing wells can probably be obtained by completing wells in the Mesaverde.

Separated from the Cretaceous aquifers by the impermeable Morrison Formation is the Sundance-Nugget Aquifer of the Jurassic Age. The Sundance-Nugget aquifer is comprised of permeable sandstone with minor quantities of shale, siltstone, and limestone (Collentine et al. 1981). The flow characteristics of the Sundance-Nugget aquifer are not well defined.

The final two major aquifers occur in Paleozoic Era rocks. The Tensleep Formation from the Pennsylvania Age consists of fine- to medium-grained sandstone between confining layers of the Chugwater Formation (Triassic) and the Amsden Formation (Pennsylvanian) (Collentine et al. 1981). The Madison aquifer is comprised of limestone and dolomite bordered on the top by the fine-grained Amsden sediments and on the bottom by Cambrian rocks. Wells completed within both of these Paleozoic aquifers have demonstrated yields up to 400 gpm. Groundwater flow is west-southwest in the project area.

Driver et al. (1984) suggest that the Browns Park Formation would be the best candidate for large-scale groundwater development. Recharge to the aquifers is generally by precipitation and surface water seepage percolating through permeable overlying materials (Welder and McGreevy 1966).

An SEO records review revealed 63 permitted wells in the vicinity of the project area. They are apportioned as follows: 2 domestic, 4 domestic/stock, 20 stock, 1 stock/irrigation, 2 stock/miscellaneous, 1 municipality, 32 miscellaneous/monitoring, and 1 miscellaneous use. Of the 63 permitted wells, 30 reported positive yields. Geologic units and yields of the 30 wells are listed in Table 3-7. The majority of these wells were developed in the Upper Cretaceous age Lance Formation, Lewis Shale and Mesaverde Group, and the Quaternary age Alluvium. Of these permitted wells, 11 are in or within one mile of the SDPA project boundary.

3.4.2.2 Quality

Groundwater quality is related to the depth of the aquifers, flow between aquifers, and the rock type. Groundwater quality is variable in the SDPA. TDS, an indicator of salinity, is generally less than 2,000 mg/l (slightly saline to saline) in the project area, with local concentrations of less than 500 mg/l (considered fresh).

Table 3-7. Existing Groundwater Wells in Project Vicinity

Formation	Number of Wells	Yield[1] (gpm)
Alluvium	5	1.5-20
Browns Park Formation	2	8-25
North Park Formation	2	2-25
Wasatch Formation	2	5-10
Fort Union Formation	2	11.5-20
Lance Formation	4	2-7.5
Lewis Shale	7	1–25
Mesaverde Group	5	2-20
Unknown	1	2

[1] obtained from SEO well completion permits

Because most existing groundwater wells and the proposed CBM wells of the SDPA occur in Mesaverde aquifers, a detailed Mesaverde groundwater quality analysis has been included. Table 3-8 lists the major cation and anion composition of Mesaverde groundwater in the project area. Sodium and bicarbonate dominate as the major ionic species. Collentine et al. (1981) offer three possible explanations for this dominance: (1) exchange of dissolved calcium for sodium; (2) sulfate reduction resulting in bicarbonate generation; and (3) intermixing of sodium-rich, saline water from low-permeability zones within the Mesaverde or adjacent aquifers.

Table 3-8. Major Ion Composition of Mesaverde Groundwater

Cation	Concentration (mg/l)	Anion	Concentration (mg/l)
Sodium	513	Bicarbonate[2]	1,284
Calcium	7	Carbonate[1]	9
Magnesium	3	Chloride	56
Potassium[1]	5	Sulfate	11

[1] potassium and carbonate concentrations were not measured in CBM samples; values represent composite of USGS data for Mesaverde wells in project vicinity (USGS 1980)
[2] bicarbonate was not measured; value shown was calculated from ion balance

Table 3-9 presents a comparison of Mesaverde groundwater with WDEQ suitability standards. The composite results of the three CBM wells analyzed indicate water that is generally suitable for livestock use, but is unsuitable for domestic supply or irrigation without treatment or dilution. Parameters with measured concentrations in excess of Wyoming drinking water standards include iron, manganese, and TDS. Calculated SAR (47.3) and residual sodium carbonate (41 meq/l) exceed the agriculture suitability limits of 8 and 1.25, respectively. Unless the water were mixed with an existing water source of lower sodium and bicarbonate and lower total salinity, irrigation would result in reduction in infiltration in the affected soil.

The confining beds slow the movement of water, and hence, movement of potential contaminants between aquifers. Although there is some downward movement of the water from the surface units, most of the groundwater movement, if any, is upward from the deeper aquifers to the shallower aquifers. Concerns have been raised for several gas field projects in southwest Wyoming regarding

Table 3-9. Groundwater Quality for Mesaverde Wells in Project Area

Parameter	Concentration[1]	Unit	Groundwater Suitability Standards[2]		
			Domestic	Agriculture	Livestock
Aluminum	0.045	mg/l	---	5	5
Ammonia	0.9	mg/l	0.5	---	---
Arsenic	0.0006	mg/l	0.05	0.1	0.2
Barium	0.36	mg/l	1	---	---
Beryllium	<0.002	mg/l	---	0.1	---
Boron	0.25	mg/l	0.75	0.75	5
Cadmium	<0.0002	mg/l	0.01	0.01	0.05
Chloride	56	mg/l	250	100	2000
Chromium	0.002	mg/l	0.05	0.1	0.05
Cobalt	NM	mg/l	---	0.05	1
Copper	0.03	mg/l	1	0.2	0.5
Cyanide	<5	mg/l	0.2	---	---
Fluoride	1.0	mg/l	1.4 - 2.4	---	---
Hydrogen Sulfide	NM	mg/l	0.05	---	---
Iron	3.06	mg/l	0.3	5	---
Lead	0.004	mg/l	0.05	5	0.1
Lithium	NM	mg/l	---	2.5	---
Manganese	0.102	mg/l	0.05	0.2	---
Mercury	<0.0004	mg/l	0.002	---	0.00005
Nickel	0.041	mg/l	---	0.2	---
Nitrate	<0.03	mg/l	10	---	---
Nitrite	<0.03	mg/l	1	---	10
Oil & Grease[3]	<1	mg/l	Virtually Free	10	10
Phenol	65	mg/l	0.001	---	---
Selenium	<0.005	mg/l	0.01	0.02	0.05
Silver	<0.003	mg/l	0.05	---	---
Sulfate	11	mg/l	250	200	3000
TDS	1,322	mg/l	500	2000	5000
Uranium	NM	mg/l	5	5	5
Vanadium	NM	mg/l	---	0.1	0.1
Zinc	0.3	mg/l	5	2	25
pH	8.2	s.u.	6.5 - 9.0	4.5 - 9.0	6.5 - 8.5
SAR	47.3	<none>	---	8	---
RSC[4]	41	meq/l	---	1.25	---
Radium 226 + Radium 228	0.9	pCi/l	5	5	5
Strontium 90	NM	pCi/l	8	8	8
Gross alpha	NM	pCi/l	15	15	15

1 boron, ammonia, fluoride, and nitrate/nitrite concentrations from 11 Mesaverde groundwater wells (USGS 1980); remaining concentrations from three Mesaverde CBM wells in project area

2 from WDEQ Water Quality Rules and Regulations, Chapter VIII

3 reported as total petroleum hydrocarbons

4 residual sodium carbonate calculated from measured calcium and magnesium concentrations and calculated bicarbonate concentration

groundwater quality degradation due to the piercing of confining layers and vertical and horizontal migration and mixing of water of variable qualities. Data suggesting this is a current problem in the project area are not available. Improperly completed injection wells could be a potential source of contamination.

CHAPTER 3: AFFECTED ENVIRONMENT

3.5 VEGETATION/WETLANDS/NOXIOUS WEEDS

3.5.1 Introduction

The SDPA is located in sections 8 and 17, T16N:R91W and covers approximately 1,000 acres. A total of 10 CBM wells are proposed for development on the SDPA. Four of these wells are currently approved or drilled, and six new wells are proposed. Other ancillary facilities proposed for development on the pod include access roads, gas and water pipelines, a compressor station, an injection well, and pumping stations (as many as 4). The SDPA Pod lies within the Great Divide Resource Area and management decisions are guided by the RMP (USDI-BLM 1990) for that resource area.

3.5.2 Vegetation Cover Types

The SDPA is located in the sagebrush steppe plant community that is typical of the high inter-mountain desert of south central Wyoming. The primary vegetation cover types in the SDPA, as identified by the Wyoming Gap Analysis Program (GAP, Merrill et al. 1996), are Wyoming big sagebrush (180 acres), and greasewood fans and flats (820 acres). The Wyoming big sagebrush cover type typically consists of more than 25% shrub cover with interspersed mixed grasses. In the greasewood cover type within the project area, shrubs are actually a mixture of greasewood (*Sarcobatus* spp.), Wyoming big sagebrush, rabbitbrush (*Chrysothamnusspp)*, and saltbush (*Atriplex spp*). Understory grasses and forbs are similar to the Wyoming big sagebrush type with common species including western wheatgrass, little bluegrass, Indian ricegrass, bottlebrush squirreltail, needleandthread, phlox, buckwheat, penstemon, and prickly-pear cactus.

According to the National Wetland Inventory (NWI) maps produced by the USFWS, no wetlands occur within the SDPA (USDI-FWS 1997). Stream channels in the project area are ephemeral and likely do not provide sufficient hydrology for wetlands to develop. As wetlands are not likely to be affected by the project activities, they will not be discussed further in this document.

3.5.3 Threatened and Endangered Species

One federally endangered plant species, blowout penstemon (*Penstemon haydenii*), has the potential to occur on or near the SDPA according to the USFWS (2000) and the Wyoming Natural Diversity Database (WYNDD 2000). No other threatened or endangered plant species are expected to occur on the SDPA.

Blowout Penstemon. Blowout penstemon is a member of the snapdragon family. The species is most commonly found in the bowls and along the rims of sandy blowouts (Fertig 2000). In Wyoming, the species has been documented on very steep, unstable sand dunes (Fertig 2001). Within these limited habitats, blowout penstemon typically occurs in large, multi-stemmed clumps. When in bloom, its lavender-purple flowers stand out against other sparse vegetation found in and around sandy blowouts. In addition to features of its leaves and flowers, blowout penstemon's lavender or vanilla-like fragrance is a characteristic that distinguishes it from other *Penstemon* species. Blowout penstemon typically blooms between late May and late June. This short flowering period is the best time of year to survey for the species.

A large area of sand dunes and blowouts exists in and around the Sandhills Area approximately 3 miles northeast of the SDPA. This area may provide potential habitat for blowout penstemon,

however, the species was not found during field surveys of this area conducted by the Wyoming Natural Diversity Database in June, 2000 (Fertig 2001). Very small and limited areas of sandy blowouts may occur in the vicinity of the SDPA, however, the closest known population of blowout penstemon is located just south of the Ferris Mountains (Fertig 2000) and blowout penstemon was not found in the Sandhills Area, therefore blowout penstemon is unlikely to occur on the SDPA.

3.5.4 Species of Concern

Species of concern includes candidates for federal listing under the ESA, BLM special status species, FS sensitive species, WGFD special concern species, and species that are designated rare by The Nature Conservancy and WYNDD. Species which are not listed as endangered or threatened by the FWS, but have been identified for possible listing in the future, are classified as candidate species. Eleven plant species of concern may potentially occur within or near the SDPA (WYNDD 2000). Of these, Gibbens penstemon and Crandall's rock-cress have the highest conservation priority (WYNDD 2000). Appendix D provides information on the names, sensitivity status, counties in which these species have been documented, notes on their overall range and distribution within Wyoming, probability of occurrence on the SDPA, and descriptions of habitat types in which these special concern plants are found. Five of the species are unlikely to occur on or near the SDPA because their respective required habitat types do not occur there. The remaining six special concern plant species have low to moderate potential to occur in or near the SDPA.

3.5.5 Invasive/Noxious Weeds

The area which includes the SDPA is vulnerable to infestations of invasive/noxious weeds such as Canada thistle, musk thistle and black henbane. Infestations of invasive/noxious weeds are relatively minimal within the SDPA at present. However, any newly disturbed surface within the SDPA would be susceptible to infestations of invasive/noxious weeds. Monitoring for weed infestations and spraying for two consecutive seasons, after emergence but before seeding, has been an effective method of controlling these species.

3.6 RANGE RESOURCES AND OTHER LAND USES

3.6.1 Range Resources

The SDPA lies within and occupies a portion of the Doty Mountain Grazing Allotment (#0415) which includes approximately 83,368 acres, 71 percent of which is public land. About two thirds of the range within the allotment is rated in good condition, the remainder is rated as excellent, fair or undetermined; less than one percent is rated as poor. Undetermined areas include sites with no description, aspen groves, badlands, and saline-loamy sites (greasewood and/or saltbush flats intermixed with sagebrush grass species). The Doty Mountain Allotment supports 6,974 AUM's (cow/calf operation) and the average stocking rate is approximately 12 acres per AUM. The season of use extends from April 1 to December 1. The project area lies within the winter pasture of the allotment where livestock use is rotated within a nine pasture system. The winter pasture is used with a low stocking rate of livestock during May, with the principle use period occurring in September through October with a moderate stocking rate of livestock (USDI-BLM 1972, Warren 2000).

3.6.2 Other Land Uses

The SDPA contains approximately 1,000 federally owned acres. There are no State of Wyoming or privately owned acres within the SDPA. The Proposed Action is located on federal lands administered by the BLM Rawlins Field Office in accordance with the Great Divide RMP.

Other land uses within and adjacent to the SDPA are agriculture (primarily cattle and sheep grazing), wildlife habitat, oil and natural gas exploration, development, and transmission, and dispersed outdoor recreation (primarily hunting in the fall). No developed recreation facilities exist within or adjacent to the project area. For more information on recreational resources in the project area (see Section 3.8).

Right-of-way (ROW) and lease data for the sections were obtained from BLM records. There are five road ROW's and one pipeline ROW currently on record for the SDPA. There are also 14 oil and gas leases in the project area, including those associated with the Proposed Action.

3.7 WILDLIFE/FISHERIES

3.7.1 General Wildlife

The SDPA includes approximately 1,000 acres of sagebrush steppe and greasewood wildlife habitats. Many common species of birds, mammals, amphibians, and reptiles may be found within the pod area. The proposed development is not expected to significantly impact the common species found in the SDPA, therefore they are not considered in this analysis. Those species being considered for threatened or endangered status, big game species, raptors, and sage grouse are considered in this analysis. The area of analysis for wildlife concerns consists of the area of the SDPA plus a two-mile buffer for sage grouse leks, and a one-mile buffer for raptor nests. Wildlife surveys discussed and summarized herein were conducted as part of larger scale surveys being performed in preparation of the ARPA EIS.

Information regarding the occurrence of species being considered for threatened or endangered status, big game species, and raptors, and sage grouse near the SDPA was obtained from several sources. Sage grouse lek locations, seasonal big game range designations, raptor nest locations, and locations for threatened and endangered species were obtained from the Wyoming Game and Fish Department's (WGFD) Wildlife Observation System (WOS). WGFD big game her herd unit annual reports were used for herd unit population statistics. This existing wildlife information for the SDPA was supplemented through survey data collected by Hayden-Wing Associates (HWA) biologists in 2000 and 2001. These data collections consisted of aerial and ground surveys to: (1) determine occurrence of threatened, endangered, proposed, or candidate species for listing on the pod area; (2) determine the occurrence, location, size, and burrow density of white-tailed prairie dog colonies; (3) determine the location and activity status of raptor nests; (4) search for previously undocumented sage grouse leks and determine the activity status of all leks in the area; (5) locate winter sage grouse concentration areas; and (6) determine the occurrence, location, and size of mountain plover habitat and conduct a preliminary presence/absence survey for the species.

3.7.2 Big Game

Three big game species: pronghorn antelope (*Antilocapra americana*), mule deer (*Odocoileus hemionus*), and elk (*Cervus elaphus*) occur on or may utilize the SDPA during the course of a year. However, due to low shrub diversity, lack of hiding cover, and proximity to county and BLM improved roads, the SDPA is most often frequented by pronghorn antelope. The types of big game seasonal ranges designated by WGFD which are discussed are winter and winter/yearlong. Winter ranges are used by substantial numbers of animals only during the winter months (December through April). Winter/yearlong ranges are occupied throughout the year but during winter they are used by additional animals that migrate from other seasonal ranges.

Pronghorn Antelope. The SDPA is located within the 1,394-square-mile Baggs Herd Unit. The SDPA is all designated as pronghorn winter/yearlong range (1,000 acres). Crucial pronghorn range is present southwest of the SDPA (Figure 4-1). The project area lies within the transition area between crucial winter range and slopes to the east which are often unusable in winter. During years with higher snowfall across the winter range, pronghorn congregate on the crucial winter range, resulting in heavy browse use here and only light use of the transition area in the fall and spring. In years with low amounts of snow, the pronghorn are not forced to spend as much time on the crucial winter range. Utilization of important shrub species is then more evenly distributed across this transition area with less use on the plants in the crucial winter range. No major pronghorn migration routes pass through the SDPA (WGFD 2000a). The 1999 post hunt season population estimate for the Baggs Herd Unit was 7,000 animals, which is 24.6 percent higher than the 1994-1998 estimated population average of 5,620. The population objective was increased 25 percent in 1994, from 7,200 to 9,000. Therefore, the current population estimate of 7,000 is 22 percent below the WGFD management objective. According to WGFD (2000a), the Baggs antelope herd had experienced low fawn production resulting in slow growth, but production has improved during recent years and the population appears to be rebounding. The SDPA is located within Hunt Area 53, where the hunter success rate for 1999 was 95.4%.

Mule Deer. The SDPA is located within the Baggs Herd Unit. The Baggs Herd Unit is very large (3,440 square miles) and contains habitats ranging from subalpine and montane coniferous forests to desert scrub. The SDPA is all designated as winter/yearlong mule deer range (1,000 acres). No major mule deer migration routes pass through the SDPA (WGFD 1999). The 1999 post-hunt population estimate for the Baggs Herd Unit was 18,300. This estimate is slightly below the WGFD

management objective of 18,700. The SDPA is located within Hunt Area 82, where the hunter success rate for 1999 was 56%.

Elk. The SDPA is located within the Sierra Madre Herd Unit (2,425 square miles). Most elk in the herd unit utilize spring/summer/fall ranges in the Sierra Madre Mountains, although there are groups using habitats on Atlantic Rim and around McCarty Canyon. During winter, the elk migrate to lower elevation winter range habitats on the west side of the Sierra Madre Mountains and into the Atlantic Rim/Sand Hills areas. Some animals may migrate as far west as the Powder Rim (~ 40 miles west of Baggs; Porter 1999). However, no major elk migration routes pass through the SDPA (WGFD 2000a). The habitat in the SDPA is designated as elk winter range (1,000 acres). The 1999 post hunt season population estimate for the Sierra Madre Herd Unit of 7,300 animals is 73.8 percent above the WGFD management objective of 4,200. The SDPA is located within Hunt Area 21, where the hunter success rate for 1999 was 37.7%.

3.7.3 Upland Game Birds

Sage Grouse. The SDPA is located within the extensive sagebrush/grassland habitat of southcentral Wyoming where sage grouse are common inhabitants. Strutting grounds (leks), nesting, brood-rearing, and wintering habitats are all important habitat components required by sage grouse. Sometimes these habitats are contiguous and other times occur in a patchy, disconnected pattern (Call and Maser 1985). A high proportion of nesting habitat is usually located within two miles of leks (Call 1974, Braun et al. 1977, Hayden-Wing et al. 1986, Lyon 2000). The sage grouse is not formally listed as a threatened, endangered, or sensitive species, however the sage grouse receives special consideration because of population declines over much of its range and its importance as an upland game bird in the state of Wyoming.

The SDPA is located within the Sierra Madre upland game management unit area (Area 25). According to the Annual Report of Upland Game and Furbearer Harvest for 1999, 857 sage grouse were harvested in Area 25 providing 631 hunter recreation days (WGFD 2000b). The Sierra Madre Upland Game Management Area accounted for approximately 4.0 percent (857 birds out of 21,556) of the state-wide harvest of sage grouse in 1998,

Approximately 18% of the SDPA (180 acres) is classified as Wyoming big sagebrush habitat, and the remainder is classified as saline upland and greasewood habitat. Much of the habitat classified as greasewood will still contain a large portion of sagebrush cover, therefore most of the pod likely provides good quality sage grouse habitat. Aerial surveys were conducted by HWA biologists during February 2001 to identify sage grouse concentration areas during winter. Winter 2000-2001 was worse than most years and snow cover was extensive and deep. This forced sage grouse to seek out habitat with sagebrush tall enough to remain above the snow. Those areas of habitat where sage grouse were found during the winter aerial survey were classified as crucial or severe winter relief habitat. One patch of sage grouse crucial winter habitat is located approximately ½ mile south of the pod boundary and approximately 200 meters west of the proposed access road and pipeline that enters the pod from the south. Aerial surveys were also conducted by HWA biologists in late March and early April, 2001 to check the status of known sage grouse leks and document new leks. Linear transects were flown at 1/4 mile spacing intervals at an average altitude of 300 feet using a fixed-wing aircraft. Lek locations were recorded with a handheld GPS receiver. Three active sage grouse leks were located within 2 miles of the pod (Figure 4-1). The 2-mile buffer around these leks includes nearly all of the SDPA.

3.7.4 Raptors

Raptor species that may occur on the SDPA include, golden eagle, bald eagle, northern harrier, sharp-shinned hawk, Cooper's hawk, northern goshawk, red-tailed hawk, Swainson's hawk, rough-legged hawk, ferruginous hawk, American kestrel, merlin, prairie falcon, peregrine falcon, short-eared owl, long-eared owl, great-horned owl, and burrowing owl. Helicopter surveys of raptor nests on and around the SDPA were conducted by HWA biologists during late May 2001. The helicopter survey protocol consisted of flying low-level, ½ mile interval transects within a one mile buffer zone of each pod. Areas of potential raptor nest habitat (cliffs, rock outcrops, etc.) were surveyed more intensively. Nest locations were recorded with a GPS unit. No active raptor nests were located within one mile of the SDPA in 2001. Four inactive ferruginous hawk nests were located within 1 mile of the pod boundary (Figure 4-1).

3.7.5 Threatened and Endangered Species - Wildlife and Fish

Black-footed Ferret and Associated White-tailed Prairie Dog Colonies. The black-footed ferret's original distribution in North America closely corresponded to that of prairie dogs (Hall and Kelson 1959, Fagerstone 1987). In Wyoming, white-tailed prairie dog (*Cynomys leucurus*) colonies provide habitat for black-footed ferrets. Ferrets depend almost exclusively on prairie dogs for food and they also use prairie dog burrows for shelter, parturition, and raising their young (Fagerstone 1987).

Prairie dog colonies on the SDPA were mapped on the ground during the summers of 2000 and 2001 by HWA. The edges of the prairie dog towns were mapped using a handheld GPS receiver and an ATV. If prairie dog burrows are located within 200 meters of each other they are considered to be in the same town. Portions of 3 prairie dog towns occur on the pod, covering approximately 270 acres (27% of the pod; Figure 4-1). Burrow density was great enough to warrant black-footed ferret surveys on the largest prairie dog town in the pod (town #3). This town was surveyed for black-footed ferrets between 15-20 October 2000 following the USFWS survey guidelines (FWS 1989). No black-footed ferrets or their sign were observed during the surveys. A small portion of prairie dog town #1 is located on the SDPA; burrow density counts on this town were sufficient to warrant a black-footed ferret survey if disturbance will take place within 50 meters of the town. The current proposed development would not occur within 50 meters of this town, therefore, black-footed ferret surveys would not be required. Prairie dog town #2 is over 200 meters from other prairie dog towns, is less than 5 hectares in size, and did not require surveying.

Mountain Plover. The mountain plover nests over much of Wyoming, but preferred habitat is limited throughout its range (Oakleaf et al. 1982, Dinsmore 1983, Leachman and Osmundson 1990). This ground-nesting species is typically found in areas of short (less than four inches) vegetation on slopes of less than five percent. Any short grass, very short shrub, or cushion plant community could be considered plover nesting habitat (Parrish et al. 1993), however, mountain plovers prefer shortgrass prairie with open, level or slightly rolling areas dominated by blue grama and buffalograss (Graul 1975, Dinsmore 1981, Dinsmore 1983, Kantrud and Kologiski 1982). Loss of wintering and breeding habitats and prey-base declines from pesticide use are thought to be factors contributing to the decline of mountain plovers on the North American Continent (Wiens and Dyer 1975, Knopf 1994).

The SDPA was surveyed for mountain plover habitat in May 2001 by HWA biologists and no potential mountain plover habitat was found (Figure 4-1).

Bald Eagle. Primary bald eagle wintering areas are typically associated with concentrations of food sources along major rivers that remain unfrozen where fish and waterfowl are available, and near ungulate winter ranges that provide carrion (Steenhof et al. 1980). Wintering bald eagles are also known to roost in forests with large, open conifers and snags protected from winds by ridges, often near concentrations of domestic sheep and big game (Anderson and Patterson 1988).

Incidental sightings of bald eagles have been recorded in the vicinity of the SDPA (WGFD 2000c). Most observations were documented between November and March, indicating that the area is commonly used by bald eagles during the winter months. No communal winter roosts are known to exist on or near the SDPA. Inspection of BLM and WGFD raptor nest records, and results of aerial and ground raptor nest surveys conducted by HWA reveal that no bald eagle nests occur within a 2-mile buffer of the SDPA. The closest known nest is located in Section 11, T12N:R93W (Cerovski 2000), approximately 24 miles southwest of the project area. This nest has been active each of the last five years.

Canada Lynx. Records of lynx in Wyoming indicate that most lynx or lynx sign between 1973 and 1986 were in lodgepole pine (18%) and spruce-fir (41%) communities (Reeve et al. 1986). According to Reeve et al. (1986), more than 50 percent of lynx records in Wyoming occurred in the northwestern region of the state. The nearest records of lynx to the SDPA were from the Medicine Bow River in 1856 (Reeve et al. 1986). Since then, no lynx sightings or sign have been documented in Carbon County.

Due to the facts that: (1) the SDPA does not include high elevation lodgepole pine/spruce-fir habitat types preferred by this species, (2) the SDPA does not support a population of snowshoe hares (preferred prey item), (3) there are no recorded lynx sightings near the SDPA (WGFD 2000c, WYNDD 2000), and (4) the closest potential habitat is more than ten miles away in the Sierra Madre Mountains, it is unlikely that lynx occur on or near the SDPA.

Threatened and Endangered Fishes. Four federally endangered fish species may occur as downstream residents of the Little Snake River system: Colorado pikeminnow *(Ptychocheilus lucius*), bonytail (*Gila elegans*), humpback chub (*Gila cypha*), and razorback sucker *(Xyrauchen texanus*) (FWS 2000). The last sighting of any of these fish in the Little Snake River was of a single Colorado pikeminnow in 1990. Currently, these fish species are not likely to be found in the mainstem Little Snake River and its tributaries within the specific project area, and critical habitat for these species has not been designated in Wyoming (Upper Colorado River Endangered Fish Recovery Program 1999), however the potential for project-related depletion impacts to these tributaries to the Colorado River warrant their inclusion in this NEPA document.

The Colorado pikeminnow, bonytail, and humpback chub are all members of the minnow family. The razorback sucker is a member of the sucker family. All four of these fish species share similar habitat requirements and historically occupied the same river systems. Declines in populations of these species are mainly attributed to impacts of water development on natural temperature and flow regimes, creation of migration barriers, habitat fragmentation, the introduction of competitive and predatory non-native fishes, and the loss of inundated bottom lands and backwater areas (Minckley and Deacon 1991, FWS 1993).

3.7.6 Species of Concern - Wildlife and Fish

Wildlife Species of Concern. Species of concern includes candidates for federal listing under the ESA, BLM special status species, FS sensitive species, WGFD special concern species, and species that are designated rare by The Nature Conservancy and WYNDD. Species which are not listed as endangered or threatened by the FWS, but have been identified for possible listing in the future, are classified as candidate species. Eight wildlife species of concern may occur on or near the SDPA (WYNDD 2000). These species and their sensitivity status/rank are listed in Appendix D.

Fish Species of Concern. Fish species that are not listed as endangered or threatened by the FWS, but have been identified for possible listing in the future, are classified as "species at risk" and are also included on the Wyoming BLM (2001) Sensitive Species List. Four fish species that have the potential to occur, or are known to occur within the specific project area, are designated as "species at risk" by the FWS and are considered sensitive by the Wyoming BLM. In addition, the Colorado River cutthroat trout has been petitioned for listing. These species are shown in Appendix D and are described below.

The four Wyoming BLM sensitive fish species that occur within or downstream from the project area are the roundtail chub (*Gila robusta*), bluehead sucker (*Catostomus discobolus*), flannelmouth sucker (*Catostomus latipinnis*), and Colorado River cutthroat trout (*Oncorhynchus clarki pleuriticus*) (WYNDD 2000, BLM 2001). All four of these species can be found within the Muddy Creek drainage on the project area or immediately downstream from its confluence with the Little Snake River. The potential for project-related impacts to water that contributes to downstream quality and flow and direct impacts to instream habitat quality or fish passage necessitates their inclusion in this NEPA document. Similar to the endangered fish species discussed previously in this document, original numbers and distribution of these special concern fishes have been reduced through the introduction of competitive and predatory non-native fish, habitat alterations that reduce or impair fish habitat and migration abilities, and unregulated fishing pressure.

The roundtail chub is a close relative of the federally endangered humpback chub and bonytail and is common within the Little Snake River drainage and can also be found in Muddy Creek (Carbon County, Wyoming), a small perennial stream located within the project area (Baxter and Stone 1995). The bluehead sucker is restricted to the Little Snake and Green River basins in Wyoming (Baxter and Stone 1995) and occupies habitat similar to that of the roundtail chub. The species is known to occur in the Little Snake River and was considered to occur in large numbers in Muddy Creek by Baxter and Stone (1995). Fish populations sampling conducted in Muddy Creek during 2000 and 2001 by Rawlins, BLM field office personnel indicated that there are far fewer bluehead sucker in this drainage than reported by Baxter and Stone (1995). Populations of bluehead sucker are considered rare in Wyoming, in comparison to other sucker species. Although the flannelmouth sucker has been considered one of the most abundant and widely distributed fish species of the tributaries and mainstream portions of the Upper Colorado River Basin (Tyus et al. 1982) and was considered a common resident of Muddy Creek by Baxter and Stone (1995), the additional sampling of BLM during 2000-2001 suggests that even fewer flannelmouth sucker exist in the Muddy Creek drainage than bluehead sucker. Colorado River cutthroat trout is one of five subspecies of cutthroat trout found in Wyoming, and was the only trout native to the Green and Little Snake river drainages in Wyoming (Baxter and Stone 1995). The current populations of Colorado River cutthroat trout occupy less than one percent of the subspecies original range.

Some of the most genetically “pure” of the remaining populations of this trout subspecies are found in the Little Snake River in Carbon County, Wyoming (Baxter and Stone 1995).

3.8 RECREATION

Recreation resources in the SDPA are typical of those found in the Red Desert Region of Wyoming. Recreation use of BLM and private lands within the SDPA are best characterized as dispersed; there are no developed recreation sites or facilities. Most recreation activities occur during the fall hunting seasons. The area attracts small game hunters in September and October during the sage grouse season. Pronghorn hunting also occurs in September. Other hunting use occurs during the mule deer season in mid to late October and hunting for rabbits and predators later in the fall and winter. During other seasons, the area attracts small numbers of recreationists engaged in rock collecting, camping and hiking, wild horse and wildlife observation, outdoor photography and picnicking. The area also has a limited amount of use by off-road vehicle enthusiasts. Although data on recreational visitation are not available, overall use levels are generally low (USDI-BLM 2000). Low visitation is a function of the small number of local residents, long drives from major population centers, lack of publicized natural attractions, and road conditions that limit vehicle access into many back country areas.

3.9 VISUAL RESOURCES

The SDPA is typical of the more rugged sections of Wyoming Red Desert Region. The characteristic landscape within the SDPA and adjacent lands is moderately undulating. Numerous small drainages dissect the landscape adding diversity. Larger views that encompass several viewsheds are available from high points. The sky/land interface is a significant aspect of all distant views. The predominant vegetation, typical of cold desert steppe, is alkali and low sage brush, mixed desert scrub, grasses and forbs with scattered patches of big sage/rabbit brush on flatter north and east facing slopes, along drainage ways and in large depressions. Small established stands of juniper exist within the study area. The combination of plant communities creates a subtle mosaic of textures and colors. Predominant vegetation colors in early spring are green and gray green changing to gray green and buff/ochre as grasses and forbs cure in the summer and fall. Reddish brown and buff colors of the badland formations add contrast and dominate in areas of steep topography. Evidence of cultural modification in the SDPA include unimproved roads and some oil and gas production facilities. Motorists traveling Wyoming Highway 789 would not have visual access to the SDPA because of viewing distance (3 to 6 miles) and intervening elevated topography. However, facilities and activities located on ridge lines or buttes are visible over longer viewing distances. The quality of the visual resource is an important part of the recreational experience for many of these users. Other non-recreational users of the area, including grazing permit holders and those working in the oil and gas industry, would also be affected by changes to the visual resources.

The intent of the BLM VRM program is to preserve scenic values in concert with resource development. BLM personnel responsible for visual resource management have classified the SDPA as Class 3. The VRM describes the levels of change to the visual resource permitted in Class 3 landscapes as:

Class 3: Contrasts to the basic elements caused by a management activity are evident but should remain subordinate to the existing landscape.

Thus for projects in Class 3 areas, project facilities, activities and site disturbance that contrast enough to attract viewer attention and are evident in the landscape are allowed, but they should be constructed in a manner that reflects the lines, forms, colors and textures of the characteristic landscape.

3.10 CULTURAL RESOURCES

3.10.1 Culture Chronology of the Project Area

Archaeological investigations in the Washakie Basin indicate the area has been inhabited by prehistoric people for at least 10,000 years from Paleoindian occupation to the present. The accepted cultural chronology of the Washakie Basin is based on a model for the Wyoming Basin by Metcalf (1987) and revised by Thompson and Pastor (1995). The Wyoming Basin prehistoric chronology is documented in Table 3-10.

Historic use of the area is limited by the formidable topographic relief. Steep canyons, inadequate water supply, badlands, and escarpments make the area inhospitable for settlement with only limited ranching activities present. Previously recorded historic sites are represented by a ranching/stock herding site, three historic debris sites, one historic cairn, and the Rawlins-Baggs stage road. Table 3-11 displays the historic chronology of the Washakie Basin.

Table 3-10. Prehistoric Chronology of the Wyoming Basin.

Period	Phase	Age (B.P.)
Paleoindian		12,000 - 8500
Early Archaic	Great Divide	8500 - 6500
	Opal	6500 - 4300
Late Archaic	Pine Spring	4300 - 2800
	Deadman Wash	2800-2000/1800
Late Prehistoric	Uinta	2000/1800 - 650
	Firehole	650 - 300/250
Protohistoric		300/250 - 150

from Metcalf (1987), as modified by Thompson and Pastor (1995)

Table 3-11. Historic Chronology of the Washakie Basin.

Phase	Age A.D.
Pre-Territorial	1842 - 1868
Territorial	1868 - 1890
Expansion	1890 - 1920
Depression	1920 - 1939
Modern	1939 - Present

from Massey 1989

3.10.2 Summary of Extant Cultural Resources

The Cultural Records Office in Laramie provided information on the previous work conducted and sites recorded in the project area. Records at Western Archaeological Services (WAS) were consulted as well as records at the Rawlins Field Office of the BLM. Only 21 cultural resource projects have been previously conducted and 6 sites recorded in the project area. Limited amounts of field work have resulted in the documentation of cultural resources through survey, test excavations, examination of ethnographic records, and historic record research. No excavations have been conducted in the project area.

Of the 21 projects conducted in the SDPA, 15 were block/linear surveys and 4 were linear surveys. Of the six previously recorded sites, two are recommended not eligible for the National Register, two are recommended eligible, and two are of unknown status.

Because of the paucity of cultural resource studies in the project area, a Class III block inventory was completed in conjunction with preparation of this EA. The entire SDPA was inventoried.

In southwest Wyoming, sand deposits (dunes, shadows, and sheets) are recognized as highly likely to contain cultural material. The topographic setting of the SDPA block is conducive to prehistoric occupation. The block is bisected by Dry Cow Creek and the terrain is capped with eolian sand deposits. The topography gently slopes to the west and the south toward Dry Cow Creek which contains limited amounts of water year round.

Two projects near the project area have investigated prehistoric site distribution and site density in the Savery Creek drainages. In *Archaeological Investigations Within the Little Snake River Basin Colorado and Wyoming*, H.D. Hall (1987) “reevaluated the nature and distribution of aboriginal sites” in Savery Creek, Slater Creek, Ridge and Valley geographic zones, Juniper Ridge, and the Little Snake Valley. The Savery Creek investigations indicate that sites are generally located in the valley bottom or lower valley terrain, on gentle inclines, near water and near major confluences. The Savery-Pothook study area is located in northwestern Colorado and south-central Wyoming. Situated along a thirty-mile stretch of the Little Snake River in the vicinity of Baggs, Wyoming, the study area includes several major tributaries. The tributaries are: Slater Creek, Four-Mile Creek, Thornburgh Gulch, Savery Creek, and Cottonwood Creek.

In the *Class III Cultural Resource Inventory and Evaluation of Eleven Prehistoric Sites within the High Savery Locality at the Proposed High Savery Dam and Reservoir Alternative, Carbon County, Wyoming,* Latham (1999) states, "The analysis domain is characterized by nondissected to moderately dissected uplands with mostly moderate-to-steep slopes and broad-to-narrow benches and flood plains along the many streams that pass through the area." Most of the prehistoric sites within the analysis domain are situated on benches or ridges overlooking one of the main tributaries. The High Savery Dam project is located ca. 12 miles east of the of the project area.

3.10.3 Site Types

Site types previously identified, recently located, or predicted to be in the SDPA are discussed below.

Prehistoric open camps (n=30) contain evidence of a broad range of activities including subsistence-related activities. Cultural remains include formal features, lithic debris, chipped stone tools, evidence of milling/vegetable processing activities including ground stone, and pottery. Single as well as long-term occupation may be represented. One site with both a prehistoric and a historic component was recorded in the SDPA block.

Lithic scatters (n = 23) consist of sites containing lithic debris such as debitage or stone tools. No features or feature remnants are found at the site. The sites are interpreted as representing short-term activities.

Quarries are sites where lithic raw material was obtained and initially processed. Primary and secondary lithic procurement areas are geologic locations where chert and quartzite cobbles have been redeposited and later used by prehistoric inhabitants for tool manufacture.

Human burials, rock art, both pictographs and petroglyphs, and rock alignment sites, are unknown in the project area, but have been identified as sensitive or sacred to Native Americans. Few of these types of sites have been located in all of southwestern Wyoming.

Two prehistoric cairns are reported in the study area. The cairns are located on a low finger ridge on Dry Cow Creek.

Pottery/ceramics are as yet undocumented in the study area. Pottery is associated with the Uinta phase of the Late Prehistoric period. There are numerous pottery sites in southwestern Wyoming and northwestern Colorado.

Ranching/stock herding sites in the area are limited to one sheepherder camp exhibiting hole-in-top cans. Refuse left behind from tending herds is usually located on terrain where a good view to watch over the herds is available as well as water.

One historic trail crosses the southern portion of the SDPA. The Rawlins to Baggs Stage Road (48CR3648) was a route used to freight goods, mail, and passengers between Rawlins and Baggs, Wyoming. According to Rosenberg (1994) the route was first used in 1881 and was known as the Rawlins to White River, the Rawlins, and the Snake River Road. The route was later labeled the Baggs to Rawlins Road (1916). The road is depicted on Masi's Itinerary Map of Wyoming (1875) and Holt's Map of Wyoming (1883). Stage stations were established along the route with service

to ranching communities in the Little Snake River Valley. There is a strong association between the road and the history of the Ute White River Agency and the Ute Massacre.

The Rawlins to Baggs Stage Road and the Baggs to Wamsutter Road (48CR5739) follow the same route for ca. 10 miles north of Baggs; generally the same route as Wyoming Highway 789. At this point, they diverge with the Rawlins to Baggs Stage Road trending north and east toward Rawlins, crossing Muddy and Dry Cow creeks. Mark Miller (1997) in *Hollow Victory: The White River Expedition of 1879 and the Battle of Milk Creek,* discusses Major Thornburgh's trek from Rawlins to the White River Agency Ute Reservation to address a complaint registered by Agent N. Meeker. His route followed a segment of an old stage road. "Thornburgh's command marched from Soldier Wells to Snake River Crossing on Wednesday, September 24. Their route crossed Dry Cow Creek, then Muddy Creek again, and followed the valley south along the west bank of the stream." The Rawlins to Baggs Road is recommended eligible for inclusion on the NRHP. It has been determined that a ¼ mile protective buffer will be established on either side of the contributing segments of the historic Rawlins to Baggs Stage Road.

3.10.4 Excavation Data

No sites have been extensively tested or excavated in the SDPA. However, several excavations have been conducted in the surrounding area contributing data about the prehistory and history of the area.

The Sheehan site is a multi-component prehistoric site (Bower et al.1984) located in the Washakie Basin, east of the project area. Component I dates to the Archaic period and Component II dates to the Late Prehistoric period. Data suggests both components reflect short-term winter camps with meat processing activities identified and locally available lithic materials exploited. The Yarmony site in northwest Colorado contained a housepit dating to ca. 6300 B.P. (Metcalf and Black 1991). The Early Archaic period housepit is a large, semi-subterranean, two-room dwelling containing four slab-lined storage bins, interior hearths and other floor features and is postulated as a long-term winter base camp. The Nova Site (48CR4419) is located ca. 4 miles northwest of the SDPA block. The site is a Uinta phase housepit dating from 1098 to 1285 B.P. and represents Component I as a short-term spring/late summer occupation. Component II was not dated but is believed to occur as the reuse of the Component I housepit.

3.10.5 Summary

A sample inventory of the of the SDPA indicates a high site density where the topographic relief gently slopes toward Dry Cow Creek. The sampling included ridges, drainages, and areas with limited sand deposits. Certain topographic settings have greater archaeological sensitivity including eolian deposits (sand dunes, sand shadows, and sand sheets), and to a limited degree, colluvial deposits along lower slopes of ridges. Previous investigations along the Savery Creek drainages, east of the project area, support a higher site potential along streams.

Historic sites are confined to ranching/herding activities. An irrigation ditch and debris scatters indicate a limited use of the area probably because of the rugged terrain and a limited water supply. The Rawlins to Baggs Stage Road crosses the southernmost portion of the SDPA block. The road is significant because it was used by the U.S. Military under the command of Major Thornburg to address the Ute uprising at the White River Agency. The road also connected small ranching communities with Rawlins for supplies and rail shipment of livestock.

3.11 SOCIOECONOMICS

The primary geographic area of analysis for potential socioeconomic effects of the Proposed and No Action alternatives is Carbon County, Wyoming and the communities of Baggs, Dixon and Rawlins. Temporary housing availability is also described for the Moffat County, Colorado community of Craig, and the Sweetwater County, Wyoming community of Wamsutter. Carbon County socioeconomic conditions characterized for the assessment include economic and population conditions, temporary housing resources, law enforcement and emergency management services, certain local and state government revenues and local attitudes and opinions.

3.11.1 Economic Conditions

Carbon County has a natural-resource-based economy. Basic economic sectors, which bring revenues into the county, include oil and gas production and processing, coal mining, electric power generation, agriculture (primarily ranching and logging), some manufacturing and transportation (primarily the Union Pacific railroad).Those portions of the retail and service sectors which serve travelers and tourism and recreation visitors are also basic. Employment and earnings are two common measures of economic activity. The mining sector, which includes oil and gas employment, would be the primary sector affected by the Proposed and No Action alternatives.

In 1998, Carbon County employment totaled 9,780 full and part-time jobs, which was about one percent lower than the 1990 level (WDAI 2000a) and about 28 percent lower than the1980 level of 13,560 jobs. Mining sector employment, which includes oi and gas jobs, decreased 46 percent from 1990 to 1998, from 934 to 501 jobs. The 1998 level was 86 percent lower than the 1980 level of 3,563 jobs mining jobs (UW 1997). The mining sector losses and the volatility in total employment are attributed to the shutdown of the Rosebud and Seminoe # 2 mines (USDI-BLM 1999) and more recently the RAG Shoshone mine near Hanna (Rawlins Daily Times 2000a). Other mine workforce reductions and the delay in opening of an anticipated mine have further affected mining sector employment in the county, however, increased natural gas drilling has resulted in increases in oil and gas employment in recent years (Schnal 2000).

In Carbon County, ten-year unemployment rates ranged from a low of 5.2 (1997) to a high of 6.1 (1993). The 1999 Carbon County unemployment rate was 5.3, based on 446 unemployed persons out of a total labor force of 8,475 (Wyoming Department of Employment 2000).

Carbon County earnings increased from $202 million to $211 million between 1990 and 1998, a 5 percent increase. However, when adjusted for inflation, Carbon County earnings decreased by 21 percent from their 1990 level during the eight-year period.

3.11.1.1 Oil and Gas Activity

Carbon County natural gas production increased from 76 million MCF in 1995 to about 80 million MCF during 1999. Carbon County oil production in 1999 was within 0.2 percent of the 1995 level of 1.3 million barrels.

One indicator of future production, approved APD's, increased steadily in Carbon County in recent years, from 50 in 1995 to 127 in 1999. Increased drilling may result in increased production in the county if drilling efforts are successful and commodity prices increase or stabilize at economic

levels. During 1999, there were a total of 742 producing oil and gas wells in Carbon County (WOGCC 1995-1999).

3.11.1.2 Economic Activities in the Vicinity of the Proposed Action

Other economic activities occurring on and near the SDPA include oil and gas exploration (Vosika Neuman 2000), cattle grazing (Warren 2000) and outdoor recreation activities such as hunting (pronghorn antelope, mule deer, elk and upland birds), hiking, off road vehicle use, camping and sightseeing. Currently 35 commercial hunting outfitters hold permits for the hunt areas where the SDPA is located, although the project area comprises only a small portion of these hunt areas (Clair 2000).

3.11.2 Population

Carbon County population growth and decline parallels the employment boom and bust cycle outlined at the beginning of this section. For example, the 2000 Carbon County population (15,639) was 29 percent lower than its 1980 level of 21,896 (WDAI 2001). Between 1990 and 2000, the City of Rawlins, the largest community in Carbon County, lost an estimated 842 persons to end the period at 8,538, although the city is growing as a result of the opening of a new state prison facility. The Town of Baggs, gained 76 residents or 28 percent of its 1990 population, and the Town of Dixon, several miles east of Baggs, gained 12 persons to end the period with an estimated population of 79.

3.11.3 Temporary Housing Resources

The nature of CBM drilling and field development activities (relatively short duration tasks performed primarily by contractors) results in demand for temporary housing resources such as motel rooms and mobile home and recreational vehicle (RV) spaces near the project area.

3.11.3.1 Baggs/Dixon Area

In the Baggs/Dixon area, most temporary housing resources are fully occupied by oil and gas workers during the summer; during winter more units become vacant. A 26-space mobile home park in Baggs is equipped to accommodate RV's as well as mobile homes. Within the park there are several rental mobile homes. There is a small four-space mobile home park in Savery and a number of mobile home lots scattered throughout the Little Snake River Valley (Grieve 2000).

There are two motels in Baggs with a total of 64 rooms, most of which can accommodate several guests. Both motels routinely accommodate oil and gas industry workers as well as tourists, travelers and hunters. As with mobile home parks, the motels are filled to capacity during the summer and fall and partially vacant during the winter. Most oil and gas occupants are relatively short term in nature, moving in and out of the community as work assignments are completed (Willis 2000, Hawkins 2000). Longer-term rental housing in the Baggs/Dixon area consists primarily of an apartment building and a newly constructed rental duplex which was vacant in the spring of 2001.

3.11.3.2 Craig, Colorado

The Craig Chamber of Commerce lists 12 motels with a total of 467 rooms and 2 campground/RV parks with a total of 128 spaces(Craig Chamber of Commerce 2000).

3.11.3.3 Wamsutter

There are temporary housing resources available in the Town of Wamsutter (Carnes 2000). Including several mobile home parks and two motels, the Town is at the center of a 200 well per year BP drilling and field development program. Wamsutter town officials recently stated that there was no available housing in the town to accommodate workers and their families associated with the current drilling and field development activity (Rock Springs Rocket Miner 2001)

3.11.3.4 Rawlins

Rawlins has 19 motels and 4 RV parks (Hiatt 2000). There are also a substantial number of apartment buildings with some availability (Hewitt 2000, Rawlins Daily Times 2000b).

3.11.4. Law Enforcement and Emergency Response

Law enforcement services in the southwestern portion of the county are provided by the Carbon County Sheriff's Department. Currently, coverage is provided by one full-time and one part-time deputy. The deputies provide coverage for the Town of Dixon and the community of Savery; the Town of Baggs has one police officer (Colson 2000).

Medical services in Baggs are provided by the county-owned clinic, which is staffed by a physician's assistant (PA), supported by other medical and administrative personnel. Emergency response is provided by six volunteer emergency medical technicians (EMT) who staff two county-owned ambulances. Seriously injured patients are transported to Craig or Rawlins, depending on the location of the accident. Casper-based Flight-for-Life is also available if appropriate (Herold 2000).

3.11.5 Local Government and State Government Revenues

Local and state government fiscal conditions most likely to be affected by the Proposed Action and No Action alternatives include county, school and special district ad valorem property tax revenues, state, county and municipal sales and use tax revenues, state severance taxes, and federal mineral royalty distributions. Some county, municipal and special district service expenditures may also be minimally affected.

3.11.5.1 Ad Valorem Property Tax

Carbon County assessed valuation in fiscal year (FY) 2000 totaled about $337 million, which yielded total property tax revenues of $21.3 million. Total mill levies within Carbon County communities ranged from 65 to 75.3. FY 2000 assessed valuation from 1999 natural gas production totaled $159 million or about 47 percent of total assessed valuation. Assessed valuation from oil production totaled 16.9 million or about 5 percent of total valuation (WTA 2000).

3.11.5.2 Sales and Use Tax

FY 2000 sales and use tax collections in Carbon County totaled about $21 million. These include collections from a four percent statewide sales and use tax, a one-percent general purpose local-option sales and use tax and a one-percent specific-purpose local option sales and use tax, which is anticipated to expire in the summer of 2001 (WDAI 2000b).

3.11.5.3 Severance Taxes

In Wyoming, severance taxes are levied against certain minerals produced in the state, including a six percent severance tax on natural gas. In FY 2000, severance tax distributions totaled $275 million (WDAI 2000c). Of the total, 44 percent was attributable to severance taxes on natural gas.

3.11.5.4 Federal Mineral Royalty Distributions

The federal government collects a 12.5 percent royalty on oil and natural gas extracted from federal lands. Fifty percent of those royalties are returned to the state where the production occurred. In Wyoming, the state's share is distributed to a variety of accounts, including the University, School Foundation fund, Highway fund, Legislative Royalty Impact Account, and cities, towns and counties. In FY 2000, a total of $309 million in federal mineral royalty funds were distributed to Wyoming entities (WDAI 2000d)

3.11.6 Attitudes and Opinions

A 1996 survey conducted in conjunction with the preparation of the Carbon County Land Use Plan provides some insight into resident attitudes and opinions regarding land use, oil and gas development, natural resource conservation and use and other topics. Just over 300 residents completed the survey, yielding an estimated statistical reliability of about 95 percent (Pederson Planning Consultants 1998).

Water resource conservation and concern for government regulation of land use were the most frequently listed important land use issues, followed closely by the availability of water to support future land uses, the economic viability of ranching, timber and oil and gas industries, and the need to conserve wildlife habitat.

County-wide, 54.9 percent of survey respondents (based on a weighted average; some respondents indicated more than one response) indicated that conservation of land, water and wildlife resources was more important than increased oil and gas production, while 36.9 percent indicated that increased oil and gas production was more important. However, among Baggs respondents, the reverse was true. About 54 percent indicated that increased oil and gas production was more important than conservation of land, water and wild life resources while 36 percent indicated that resource conservation was more important. The land use plan attributes this difference to Baggs' greater economic dependence on future oil and gas employment.

Concerning management of federal lands, the largest number of respondents (69.5 percent) indicated that more federal lands within the county should be designated for the purpose of conserving fish and wildlife habitat and surface and groundwater resources. In addition, 60.8 percent of respondents indicated that more land should be designated for public recreation, 48.8 percent indicated more land should be leased for oil and gas industry exploration and production,

48.7 percent indicated more land should be leased for commercial mining, and 44.5 percent indicated more land should be made available to local timber companies for commercial timber harvest.

Coal-bed methane development was not considered during the survey, therefore resident attitudes and opinions about unique aspects of CBM are not known (Hewitt 2000).

3.11.7 Environmental Justice

Executive Order (EO) 12898, "Federal Action to Address Environmental Justice in Minority Populations and Low-Income Populations" was published in the *Federal Register* (59 FR 7629 on February 11, 1994). EO 12898 requires federal agencies to identify and address disproportionately high and adverse human health or environmental effects of their programs, policies, and activities on minority populations and low-income populations (defined as those living below the poverty level). The EO makes clear that its provisions apply fully to American Indian populations and Indian tribes, specifically to affects on tribal lands, treaty rights, trust responsibilities, and the health and environment of Indian communities.

Communities within Carbon County, entities with interests in the area, and individuals with ties to the area all may have concerns about the presence of CBM development within the project area. Communities potentially impacted by the presence or absence of the proposed development have been identified above in this section. Environmental Justice concerns are usually directly associated with impacts on the natural and physical environment but these impacts are likely to be interrelated to social and economic impacts as well.

Native American access to cultural and religious sites may fall under the umbrella of environmental justice concerns if the sites are on tribal lands or access to a specific location has been granted by treaty right. With regard to environmental justice issues affecting Native American tribes or groups, the project area contains no tribal lands or Indian communities, and no treaty rights or Indian trust resources are known to exist for this area.

3.12 TRANSPORTATION

The regional transportation system serving the project area includes an established system of interstate and state highways and county roads. Local traffic on federal land is served by improved and unimproved BLM roads.

3.12.1 Access to the Project Site

Access to the project site is provide by a combination of Interstate, state highways, and county and BLM roads. Table 3-12 displays specific access routes to the SDPA. The Wyoming Department of Transportation (WYDOT) measures average daily traffic (ADT) on federal and state highways. ADT on highways providing access to the SDPA are shown in Table 3-12.

WYDOT assigns levels of service to highways in the state system. Levels of service (A through F) are assigned based on qualitative measures (speed, travel time, freedom to maneuver, traffic interruptions, comfort and convenience) that characterize operational conditions within traffic

Table 3-12. Access Routes to the SDPA

Highway or Road		
Highway or Road	ADT	Level of Service / Accidents
I-80	Rawlins - Wamsutter: 10,670 (6,170 trucks)	A 1999: 89 5 yr average: 112.4
SH 789	(1) @ I80/ Crestone Junction: 850 (160 trucks); (2) @ Baggs Corporate Limit: 1650 (190 trucks)	B 1999: 27 5 yr average 16.4
CCR 608 (Wild Cow Road) & CCR 605	n/a	n/a

Sources: Wyoming Department of Transportation, Carbon County Road and Bridge Department

streams and the perceptions of those conditions by motorists. A represents the best travel conditions and F represents the worst. Levels of service for highways providing access to the SDPA are also shown in Table 3-12.

The SDPA would be accessed from SH 789, CCR 608 (Wild Cow Road) and, for a short distance (less than one-half mile), CCR 605. A new improved dirt road (less than one-quarter mile in length) would be constructed into the southern boundary of the project area. CCR 608 is a two-lane improved and unimproved native material road. CCR 608 currently provides access to oil and gas fields in the area (Evans 2000).

3.13 HEALTH AND SAFETY

Existing health and safety concerns in and adjacent to the SDPA include occupational hazards associated with CBM exploration and operations; risk associated with vehicular travel on improved and unimproved county and BLM roads; firearms accidents during hunting season and by casual firearms use such as plinking and target shooting; and low probability events such as land slides, flash floods and range fires.

3.14 NOISE

Other than vehicle traffic on Wyoming State Highway 789; jet aircraft overflights at high altitudes; and localized vehicular traffic on county, BLM and two-track roads in the project area; only on-going drilling and production operations on lands adjacent to the project area create even modest sound disturbances within, and in the immediate vicinity of, the SDPA.

CHAPTER 4

ANALYSIS OF ENVIRONMENTAL CONSEQUENCES

4.0 INTRODUCTION

This chapter of the environmental assessment provides an analysis of the potential environmental consequences that would result from implementation of the Proposed Action (federal land development of six well locations, access roads, associated facilities and reclamation) and No Action (denial of further federal land development–four existing wells, one injection well, access road, and associated facilities) in the Sun Dog project area (SDPA). Measures that would avoid or reduce impacts under the Proposed Action have been included in Chapter 2. The following impact assessment takes these measures into consideration. Additional opportunities to mitigate impacts beyond the measures proposed in Chapter 2 are presented in this chapter under Mitigation Summary for each resource discipline.

As discussed in Chapters 1 and 2 of this EA, the Sun Dog EA project area lies within the proposed Atlantic Rim CBM project area (Figure 1-2). Drilling and field development activities associated with the Sun Dog EA Proposed Action would be authorized by the Interim Drilling Policy (see Appendix A), the terms of which do not allow approval of activities that may result in significant impacts to resources.

This analysis of environmental consequences addresses only those direct and indirect impacts associated with exploration and development of the Sun Dog interim development pod.

The description of the environmental consequences for each resource section in this chapter includes the following subsections:

Impacts The level and duration of impacts that would occur as a result of the Proposed Action or the No Action Alternative. The impact evaluation assumes that the applicant-committed practices described in Chapter 2 would be implemented

Mitigation - A summary of additional measures that could be applied to avoid or reduce impacts. Mitigation items specified in the Mitigation Summary are *assumed to be* applicable to impacts on all lands, regardless of ownership. However, PEDCO would coordinate with private land owners to determine which measures would be applied, to what degree, and where. Also, because of the similarity between the Proposed Action and No Action, it is assumed that the mitigation described applies to both alternatives. The measures identified under this section would be considered for application to all Bureau of Land Management-(BLM) administered lands. If no additional mitigation is proposed, the mitigation and residual impact sections will not be discussed.

Residual Impacts - A summary of impacts that remain after the application of available and reasonable mitigation and, therefore, would remain throughout the duration of the project and to some point beyond.

Cumulative Impacts - A description of impacts likely to occur due to this project in combination with other on-going and recently approved activities, recently constructed projects and other past projects, and projects likely to be implemented in the near future (reasonably foreseeable future actions or RFFA's).

CHAPTER 4: ANALYSIS OF ENVIRONMENTAL CONSEQUENCES

This environmental analysis addresses cumulative impacts associated with exploration and development of 200 interim CBM wells and other activities, on-going or proposed, within the Atlantic Rim project area. Cumulative impacts associated with exploration and development of the Sun Dog pod are shown in Section 4.15 of this EA.

4.1 GEOLOGY/MINERALS/PALEONTOLOGY

4.1.1 Impacts

4.1.1.1 Proposed Action

Utilization of proper construction techniques described in Chapter 2 would minimize impacts resulting from the topographic alteration of developing six CBM wells and associated facilities. As discussed in Chapter 3, no major landslides have been mapped within the project area. Following prescribed proceedures construction activities would not likely activate landslides, mudslides, debris flow, or slumps. Seismic activity is low in the area, so the potential for damage of project facilities is minimal.

Inventory of geologic resources revealed no major mineral resources that would be impacted by implementation of the project other than CBM reserves. Drilling of CBM wells would better define the location and nature of CBM resources available within the SDPA. Recovery of CBM would result in the depletion of the natural gas resource.

As discussed in Chapter 2, Project-Wide Mitigation Measures, the mitigation measures presented in the Soils and Water Resources sections would avoid or reduce potential impacts to the surface geologic environment. Implementation of these measures and adherence to Federal and State rules and regulations regarding drilling, testing and completion procedures would avoid or reduce potential impacts to the subsurface geologic environment.

Construction excavation associated with the development of access roads, CBM well pads, gas and water pipelines, and related gas production and water disposal facilities could directly result in the exposure and damage or destruction of scientifically significant fossil resources. For example, fossils may be subject to damage or destruction by erosion that is accelerated by construction disturbance. In addition, improved access and increased visibility, as the result of construction and on-going production activity, may lead to fossils being damaged or destroyed by unauthorized collection or vandalism. The Lewis Shale of Cretaceous age, which underlies the area, has produced scientifically significant fossils elsewhere in Wyoming (and thus meets BLM Condition 2), but there are no reported occurrences in the project area. The potential for recovery of significant vertebrate fossils in the SDPA is considered to be low to moderate. Mitigation measures discussed in Chapter 2 are reasonable measures to protect potential paleontologic resources that may be inadvertently uncovered during excavation.

4.1.1.2 Alternative A - No Action

Under the No Action Alternative, the development of the four previously approved CBM wells, one injection well, and an access road would occur on public surface. The impacts would be similar to those occurring under the Proposed Action, but slightly reduced.

4.2 AIR QUALITY

4.2.1 Impacts

4.2.1.1 Proposed Action

No violations of applicable state or Federal air quality regulations or standards are expected to occur as a result of direct or indirect project air pollutant emissions from CBM well development (including both construction and operation) in the SDPA.

Under the proposed action, air emissions would occur from the construction and production of CBM wells within the SDPA. Construction emissions would include PM-10, SO_2, NO_x, CO, and VOC's, from ground-clearing, heavy equipment use, drilling, and completion activities, as well as the construction of access roads. Construction emissions are temporary and would occur in isolation, without significantly interacting with adjacent wells.

Production emissions of NO_x, CO, VOC, and HAP's (formaldehyde) would result primarily from operation of compressor engines. Estimated air quality impacts from compressor engines assumed that the compressor engines would have an average potential NO_x emission rate of approximately 2 grams per horsepower-hour (g/hp-hr) of operation. This reflects emission control levels which have already been required in similar applications, although WDEQ-AQD operating permit records have shown existing facility hourly emission levels to be substantially less. The emissions generated from compressor operation would contain negligible amounts of SO_2 and particulate matter due to the composition of coalbed methane gas. Production emissions from the compressor engines would occur over the LOP.

Emissions from production wells would be negligible since the produced gas is nearly 100 percent methane and will require no ancilliary production facilities at the well site.

Pollutant emissions from the construction and operation of natural gas fields in the vicinity of the SDPA have been analyzed in recent air quality studies performed under NEPA by the BLM. Studies conducted for the Continental Divide/Wamsutter II and South Baggs Natural Gas Development Projects (BLM 2000 and 1999) indicated potential near-field increases in CO, NO_2, PM-10, and SO_2 concentrations, however, the predicted maximum concentrations would be well below applicable state and National Ambient Air Quality Standards. Similarly predicted HAP (formaldehyde) concentrations would be below various 8-hour maximum Acceptable Ambient Concentration Levels, and the related incremental cancer risks to residences would also be below applicable significance levels

The emissions resulting from the implementation of this project would be much the same as those found on similar oil and gas projects such as Continental Divide, but on a much smaller scale. The 6-well project described in this EA is well under the limit of the 3,000 well air quality analysis prepared for the Continental Divide EIS, considering only 2,130 wells were approved. The analysis for the Continental Divide EIS project included impacts to Class I areas from oil and gas development in southern Wyoming. Based on the relative size of the Proposed Action when compared to the magnitude of these projects, no ambient air quality standards would be violated and no adverse air quality conditions would result from the Proposed Action.

4.2.1.2 Alternative A - No Action

Air quality impacts from the four previously approved CBM wells are similar but less than those described under the Proposed Action.

4.2.2 Mitigation Summary

If air quality analyses indicate exceedances in NO_x the following type of control measures could be implemented including the reduction of compression requirements, electric compression, or the use of nonselective catalytic reduction (NCR), lean combustion, or selective catalytic reduction (SCR) control technologies. Currently, these levels are below required levels and the likelihood of requiring these measures is small.

4.2.3 Residual Impacts

Implementation of mitigation, if necessary, would further reduce air quality emissions.

4.3 SOILS

4.3.1 Impacts

4.3.1.1 Proposed Action

Approximately 21.2 acres of soils resources would be temporarily disturbed during drilling and field development; after initial reclamation, approximately 13.2 acres would remain disturbed over the life-of-project (see Table 2.2).

Increased susceptibility to wind and water erosion would be a direct impact in newly disturbed areas and may cause sedimentation in drainage channels or impoundments. Soil compaction caused by equipment traffic or by increased raindrop impact after loss of surface vegetation cover would decrease infiltration and percolation, increase runoff, and reduce overall water storage capacity. Susceptibility to erosion would occur primarily in the short term and would decline rapidly over time due to the use of proper construction and reclamation techniques and the implementation of mitigation measures described in Chapter 2.

Due to the high amount of salt or sodium content/high clay material within the project area disturbance and/or use of this material is discouraged. Sodium affected soils could contaminate suitable material and cause dispersion of clays and sealing of reclaimed surfaces. Other direct chemical impacts to the soil resource could also include reduction of overall fertility based on length of stockpiling of material and loss of nutrients (FS 1984); possible oxidation and release of elements such as boron or selenium, although no analyses were conducted.

Stripping of high clay material, surface sandy or gravelly material, as well as channery material in the subsoil, could reduce the physical suitability of the soil resource used from reclamation. If stripped and stockpiled with suitable material, contamination could result in increased droughtiness and decreased fertility, of reclamation material, as well as hamper actual seeding operations. Other physical impacts to the soils resource during stripping may include: loss of soil structure and decreased permeability; mixing of various textures; and solution of surface organic matter and subsequently soil biota. Stockpiling soil material could degrade physical properties of the soil resource such as bulk density, in addition to the biological and chemical effects mentioned earlier

(FS 1984). In addition, stockpiling of material can increase the potential for soil loss until the soil is revegetated.

Topsoil quality in the project area varies based on local topography and source of parent material. Primary limitations overall include: salt or sodium content; high clay content; thin soil development or inaccessibility to stripping operations; channery or high coarse fragment content; or sandy or gravelly soils. Revegetation potentials range from mostly fair to poor, with some areas rated as good. In addition to these limitations, low annual precipitation, susceptibility to wind and water erosion, and short growing season could make reclamation in the project area more difficult.

Due to the small area of disturbance and use of proper construction and reclamation techniques and implementation of mitigation described in Chapter 2, impacts to soil resources in the SDPA are anticipated to be minimal.

4.3.1.2 Alternative A - No Action

Under this alternative, impacts to the soils environment would be similar to those described for the Proposed Action but of a smaller magnitude.

4.4 WATER RESOURCES

4.4.1 Impacts

4.4.1.1 Proposed Action

Potential impacts that could occur to the surface water system due to the Proposed Action include increased surface water runoff and off-site sedimentation due to soil disturbance, water quality impairment of surface waters, and stream channel morphology changes due to road and pipeline crossings. Impacts to surface water resources would depend on the proximity of the disturbance to a drainage channel, slope aspect and gradient, degree and area of soil disturbance, soil character, duration of time within which construction activities occurs, and the timely implementation and success/failure of mitigation measures. Increased sedimentation is not expected to occur as a result of the implementation of the Proposed Action due to compliance with measures described in Chapter 2.

Construction activities would occur over a relatively short period of time. Construction impacts would likely be greatest shortly after the start of the project and would decrease in time due to stabilization, reclamation, and revegetation efforts. The construction disturbance would not be uniformly distributed across the project area, but rather, project construction activities would be concentrated within and around the wells.

Water for use in drilling the initial CBM well in the SDPA would be obtained from a local source and water for drilling the remaining wells would be obtained from the first well drilled. The proposed project would require approximately 84,000 gallons (0.26 acre-foot) of water per well for completion, well stimulation and dust control. This water demand is relatively small and would not adversely affect existing surface or groundwater sources or rights.

The primary impact of the Proposed Action on groundwater resources is the loss of hydraulic pressure head in the affected coal seam aquifer. The removal of groundwater from the coal aquifer results in the reduction of the hydraulic pressure head, thus lowering the water levels in nearby wells completed in the same coal seam. The lowering of water levels in an aquifer is also referred to as drawdown.

The focus of this groundwater impact assessment is the coal seam aquifers within the Almond Formation, a member of the Upper Cretaceous Mesaverde Group. These targeted coal seams are classified as confined to semi-confined aquifers because they are bound by aquitards consisting of impervious to semi-pervious layers of shale and siltstone. Hydraulic connection between the Almond Formation coal seams and any aquifer stratigraphically above or below the coal seams is therefore very limited. The hydrostatic pressure head of the water measured in coal seam test wells completed in the project area can be considerably higher (100 to 300 feet higher) than the ground level elevation at any respective well location. Confined, or artesian, aquifer conditions of this type are indicative of an effective seal or aquitard above and below the aquifer. However, lowering of the hydraulic pressure head in the coal seam aquifer by dewatering activities may induce a slight leakage of water through the semi-pervious shale layers into the pumped aquifer. Due to extremely low hydraulic conductivity of the confining layers, enhanced leakage from any aquifer stratigraphically above or below the dewatered coal seams would be minimal.

It is acknowledged that implementation of the interim drilling program would decrease water levels within the coal seam aquifer. Relative to the available drawdown within the aquifer, these impacts would be minimal. Wells completed in the Almond Formation coal seams could be impacted by activities under the Proposed Action, however, minimization of these impacts would occur by the measures described in Chapter 2 and in the Water Management Plan (Appendix C-4).

In terms of water quantity and quality, impacts to the injection horizon would be minimal. In terms of quantity, the only impact to the injection horizons would consist of an increase in hydraulic head emanating from the injection well which would dissipate with distance away from the wellbore. The fracture gradient of the shale aquitards that over and underlie the injection horizons would not be exceeded, so all injected water would be contained in the injection horizon and would not migrate vertically. In terms of quality, background water quality analyses of the injection horizon are currently not available, but it is anticipated that the CBM produced water that would be injected would be of equal or higher quality in regards to class of use as defined by WDEQ-WGD regulations. Injection of the CBM produced water is not expected to result in any deterioration in the water quality of the groundwater in the injection horizon.

4.4.1.2 Alternative A - No Action

Impacts to water resources under this alternative would be similar to the Proposed Action but of a lesser magnitude.

4.5 VEGETATION/ WETLANDS/NOXIOUS WEEDS

4.5.1 Impacts

4.5.1.1 Proposed Action

The proposed action assumes construction of 6 CBM wells and associated roads and pipelines. Construction and installation of well sites, access roads, and ancillary facilities would directly reduce the extent of vegetation cover types. It is assumed that 4 pumping stations would be developed (the maximum number that may be required).

The proposed development would take place primarily within the SDPA, however, an access road, gas sales line, gas production line, and compressor station are proposed for development outside the pod boundary. Over the development phase, approximately 21.2 acres would be disturbed.

During the production phase, all pipelines and portions of well pads would be reclaimed. A portion of each well pad (15 x 15 feet, approximately 0.005 acre) would remain disturbed for the life of the project. Disturbance associated with the compressor station, injection well, and pumping stations would remain for the life of the project. Total vegetation disturbance would be reduced from 21.2 acres to approximately 13.2 acres after reclamation.

The Wyoming big sagebrush, greasewood, and saltbush cover types disturbed under the Proposed Action are commonly found across southwest Wyoming. The short- or long-term loss in acreage described above would not impact the overall abundance and quality of these habitats.

In general, the duration of impacts on vegetation in the project area would depend on the time required for natural succession to return disturbed areas to pre-disturbance conditions of diversity (species diversity and structural diversity). Reestablishment of pre-disturbance conditions would be influenced by climatic (growing season, temperature, and precipitation patterns) and edaphic (physical, chemical, and biological soil conditions) factors. This would include the amount and quality of topsoil salvaged, stockpiled, and re-spread over disturbed areas.

Surface disturbance activities could affect vegetation directly and indirectly by destroying individuals or their habitat, and introducing weeds. Weedy species often thrive on disturbed sites such as road ROW's and out-compete more desirable plant species. Increased weed invasion may render a site less productive as a source of forage for wildlife and livestock. However, given the application of mitigation measures summarized in Chapter 2, invasion of weed species is not expected.

No federally listed threatened or endangered plant species are known to occur in the SDPA; therefore, implementation of the proposed development would not adversely impact federally listed species.

The distribution of plant species of concern is likely limited on the SDPA due to a lack of suitable habitat for most of the species. Due to the low likelihood of the sensitive plant species to occur on the SDPA and the small amount of disturbance associated with the proposed action, no impacts upon the plant species of concern are expected.

4.5.1.2 Alternative A - No Action

Under this alternative, approximately 19.0 acres of initial, and 14.5 acres of LOP disturbance is anticipated. Impacts to vegetation and wetlands would be similar to those described under the Proposed Action but of a lesser magnitude.

4.6 RANGE RESOURCES AND OTHER LAND USES

4.6.1 Impacts

4.6.1.1 Range Resources

4.6.1.1.1 Proposed Action

Anticipated impacts to range resources associated with the Proposed Action are limited to a minimal loss of forage and associated AUM's, an increased potential for vehicle/livestock collisions and an increased potential for the spread of noxious and invasive weeds.

The SDPA lies within the Doty Mountain grazing allotment, described in Section 3.6. Livestock grazing activities would continue during the drilling, field development and operations phases of the project. Forage in the project area would be reduced slightly during drilling and field development and restored as soon as practical thereafter, except for areas used for roads, production equipment and ancillary facilities, which would remain disturbed throughout the productive life of the field. The increased traffic in the SDPA during the drilling and field development phase would correspondingly increase the potential for vehicle/livestock accidents during that period.

The Proposed Action would result in an estimated 21.2 acres of short-term disturbance during drilling and field development, an estimated 13.2 acres of long-term disturbance would remain after the initial reclamation activities described in Chapter 2 are completed (see Table 2-2). The short-term drill pad and ancillary facility disturbance would be reclaimed as soon as practical after field development, as would all areas disturbed for gas and produced water pipelines. All remaining disturbed areas would be reclaimed at the end of field operations, except those facilities which the BLM may identify as desirable for other use.

The average stocking rate for the for the Doty Mountain allotment is 12 acres per AUM. Consequently, the Proposed Action would result in a short-term loss of forage associated with about two AUM's, and long-term loss of only one AUM. These losses would amount to substantially less than one percent of total AUM's in the allotment.

There is potential for conflict between Proposed Action-related activities and range operations. The increased activity associated with drilling and field development would result in increased opportunities for vehicle/livestock collisions, particularly during and just after calving season when calves are difficult to see and tend to congregate on roads (Warren 2000, Hicks 2000). Since most of the livestock use in this pasture occurs in the fall when calves are larger, impacts would be minimal. Given the low traffic volumes associated with field operations (one to two trips per day on average), vehicle/livestock collisions are of less concern for the long term.

Based on the assumptions and estimates contained in this assessment, the Proposed Action would not result in impacts to range resources.

4.6.1.1.2 Alternative A- No Action

Impacts resulting from the implementation of this alternative would be similar to those described under the Proposed Action.

4.6.1.1.3 Mitigation Measures

The BLM would recommend that the operator establish speed limits in the SDPA.

The proponent should coordinate with affected livestock operators to minimize disruption during livestock operations, including calving season.

4.6.1.1.4 Residual Impacts

Loss of livestock due to vehicle collisions would be reduced over the long term.

4.6.1.2 Other Land Use

4.6.1.2.1 Proposed Action

Potential impacts to other land uses are limited to recreation resources and wildlife habitat, which are discussed under the sections dealing with those resources.

As described in section 3.6, other land use on and adjacent to the proposed action include wildlife habitat; oil and natural gas exploration, development, and transportation; and dispersed outdoor recreation (primarily hunting in the fall). Effects on wildlife resources are described in Section 4.7. Effects on recreation resources are described in Section 4.9. The preconstruction planning and site coordination process and measures described in Chapter 2 would reduce the potential for conflict with existing oil and gas pipelines, road ROW's and other oil and gas leases.

4.6.1.2.2 No Action

Under the No Action Alternative, other land use conditions described in Chapter 3.6 would remain relatively constant, with the exception that other oil and gas leases on or near the project area might be developed.

4.7 WILDLIFE/FISHERIES

4.7.1 Impacts

4.7.1.1 Proposed Action

The current and proposed development would disturb approximately 21.2 acres of general wildlife habitat as a result of the Proposed Action. Analysis of potential impacts of the proposed development upon wildlife assumes development of the wells, roads and pipelines in the approximate locations identified in Figure 4-1.

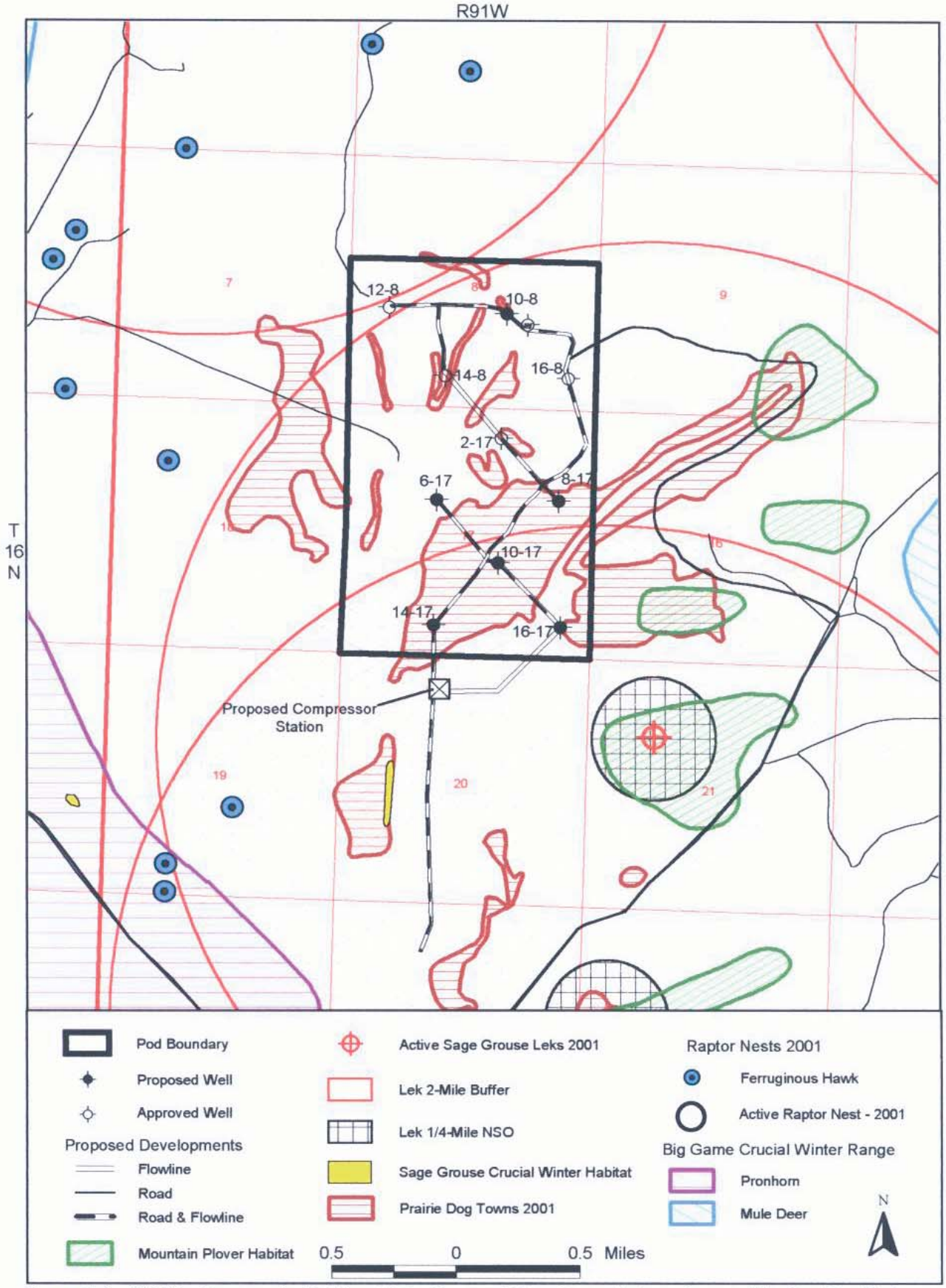

Figure 4-1 . Wildlife Concerns in Relationship to Proposed Developments in and around the Sun Dog Pod.

During the production phase, the unused portion of well sites and pipelines would be reclaimed. Following completion of production operations (life of the project is estimated at 10-20 years), the well field and ancillary facilities would be reclaimed and abandoned. Well pads would be removed and the areas revegetated with seed mixes approved by the BLM, some of which are specifically designed to enhance wildlife use. The duration of impacts to vegetation would depend, in part, on the success of mitigation and reclamation efforts and the time needed for natural succession to return revegetated areas to predisturbance conditions. Grasses and forbs are expected to become established within the first several years following reclamation, however, much more time would be required to achieve reestablishment of shrub communities. Consequently, disturbance of shrub communities would result in a longer-term loss of those habitats.

In addition to the direct loss of habitat due to construction of well pads and associated roads and pipelines, disturbances from human activity and traffic would lower wildlife utilization of habitat immediately adjacent to these areas. Species that are sensitive to indirect human disturbance (noise and visual disturbance) would be impacted most. Habitat effectiveness of these areas would be lowest during the construction phase when human activities are more extensive and localized. Disturbance would be reduced during the production phase of operations and many animals may become accustomed to equipment and facilities in the gas field and may once again use habitats adjacent to disturbance areas.

4.7.1.1.1 General Wildlife

The direct disturbance of wildlife habitat in the SDPA and outside of the pod under the proposed development would reduce habitat availability and effectiveness for a variety of common small mammals, birds and their predators. The initial phases of surface disturbance would result in some direct mortality to small mammals and the displacement of songbirds from construction sites. In addition, a slight increase in mortality from increased vehicle use of roads in the project area is expected. Quantification of these losses is not possible; however, the impact is likely to be low over the short-term. Due to the relatively high production potential of these species and the relatively small amount of habitat disturbed, small mammal and songbird populations would quickly rebound to pre-disturbance levels following reclamation of pipelines, unused portions of roads, well pads, and wells that are no longer productive. No long-term impacts to populations of small mammals and songbirds are expected.

4.7.1.1.2 Big Game

In general, impacts to big game wildlife species would include direct loss of habitat and forage, and increased disturbance from drilling, construction, and maintenance operations. Disturbance of big game species during the parturition period and on winter range can increase stress and may influence species distribution (Hayden-Wing 1980, Morgantini and Hudson 1980). There may also be a potential for an increase in poaching and harassment of big game, particularly during winter. According to management directives in the RMP (BLM 1990), important big game winter ranges will be closed from November 15 - April 30, this closure of areas located in crucial big game winter ranges will reduce disturbance to wintering big game. This closure would also limit the potential for poaching and/or harassment of big game species wintering in the area. No big game crucial winter range is located in the SDPA.

Mule Deer. The SDPA supports mule deer year round. All of the pod is classified as mule deer winter/yearlong range. Construction of the proposed development would disturb 21.2 acres of this range type. Following reclamation, approximately 13.2 acres of mule deer winter/yearlong range

would remain disturbed for the remaining life of the project. Mule deer crucial winter range is located approximately 1.5 miles west and east of the SDPA (Figure 4-1), however, no major migration routes pass through the pod to these crucial ranges (WGFD 1999).

Elk. The Sun Dog Pod supports elk during the winter months and all of the pod is classified as elk winter range. A total of 21.2 acres of elk winter range would be disturbed under the proposed action. Following reclamation, approximately 13.2 acres of elk winter range would remain disturbed for the remaining life of the project. Major elk migration routes do not cross the pod (WGFD 2000a).

No impacts upon the elk population utilizing the SDPA are expected provided that mitigation measures contained in this document, the RMP, and the Interim Drilling Policy are implemented.

Pronghorn Antelope. The SDPA supports antelope throughout the year. All of the SDPA is classified as pronghorn winter/yearlong range. Six wells would be located in winter/yearlong range. Approximately 21.2 acres of pronghorn winter/yearlong range would be disturbed under the proposed action. Following reclamation, approximately 13.2 acres of winter/yearlong range would remain disturbed for the remaining life of the project. Major pronghorn migration routes do not cross the SDPA (WGFD 2000a).

Activities associated with the construction phase of the project would likely temporarily displace antelope, however, once construction is complete antelope would likely habituate and return to pre-disturbance activity patterns. Reeve (1984) found that pronghorn acclimated to increased traffic volumes and machinery as long as the traffic and machines moved in a predictable manner. Overall, no impacts upon the antelope population utilizing the SDPA are expected provided that mitigation measures contained in this document, the RMP, and the Interim Drilling Policy are implemented.

4.7.1.1.3 Upland Game Birds

Sage Grouse. Suitable sage grouse habitat is abundant on and around the SDPA. The amount of habitat disturbance is minimal considering the amount available in the project area, however, sage grouse can be impacted by other activities associated with CBM development including increased human activity, increased traffic disturbance, and pumping noises.

Three active sage grouse leks were identified within 2 miles of the SDPA in 2001 (Figure 4-1). Nearly all of the pod, and the CBM wells are located within the 2-mile buffers of these active leks, and it is likely that sage grouse nest on the SDPA given the presence and proximity of these leks to the pod.

The RMP contains stipulations that nesting activities of sage grouse be protected from February 1 to July 31, including strutting grounds and nesting habitat. Exceptions may be granted if the activity will occur in unsuitable nesting habitat. No surface occupancy stipulations apply within a 1/4 mile buffer around active leks, however there are no NSO areas located on the pod associated with sage grouse leks. The area of the SDPA included within the 2-mile buffer of the active sage grouse lek is a sensitive resource area according to the Interim Drilling Policy and mitigation measures and stipulations must be followed to protect this area. If all avoidance and mitigation measures in this document, the RMP, and the Interim Drilling Policy are implemented, no impacts to the sage grouse population are expected.

4.7.1.1.4 Raptors

The principal potential impacts of the Proposed Action on raptors are : (1) nest abandonment and/or reproductive failure caused by project related disturbance, (2) increased public access and subsequent human disturbance resulting from new road construction, and (3) small, temporary reductions in prey populations. No active raptor nests were located on or within 1 mile of the SDPA during surveys conducted in May, 2001. Four inactive ferruginous hawk nests were located within 1 mile of the SDPA.

The RMP states that no activity or surface disturbance will be allowed near raptor nesting habitat from February 1 - July 31. The size of the restrictive radius and the timing restriction may be modified depending on species of raptor and whether or not the nest is within the line of sight to construction activities. No impacts to breeding raptors are expected, provided that avoidance and mitigation measures in this document, the RMP and the Interim Drilling Policy are followed.

4.7.1.1.5 Threatened and Endangered Species - Wildlife and Fish

The following species are either threatened, endangered, or proposed for listing under the ESA. These species may have potential to occur on or near the project area and therefore potential impacts to these species caused by the proposed action are considered.

Threatened and Endangered Wildlife Species

Black-Footed Ferret. In Wyoming, white-tailed prairie dog colonies provide essential habitat for black-footed ferrets. Ferrets depend almost exclusively on prairie dogs for food, and they depend upon prairie dog burrows for shelter, parturition, and raising young (Hillman and Clark 1980). A large portion of the SDPA consists of prairie dog towns (27%; Figure 4-1). Prairie dog towns must be greater than 200 acres and have a burrow density greater than or equal to 8 burrows/acres in order to be considered suitable for black-footed ferrets (Biggins et al. 1989). Prairie dog towns #3 and #1 had burrow densities greater than 8/acre. Prairie dog town #3 was surveyed for black-footed ferrets in October 2000 and September 2001, and no black-footed ferrets or their sign were observed. If disturbance is going to occur within 50 meters of a prairie dog town with burrow density that is greater than or equal to 8 burrows/acre, then ferret surveys would be conducted prior to disturbance. Prairie dog town #1 is not expected to be disturbed given the current proposed location of developments. Prairie dog town #2 is more than 200 meters from other prairie dog towns, and is less than 5 hectares in size, therefore it does not require surveying. The proposed development is not expected to impact black-footed ferrets, provided that avoidance and mitigation measures outlined in this document, the RMP, and the Interim Drilling Policy are implemented.

Mountain Plover. Although no mountain plovers were found during 2001 surveys, the presence of prairie dog towns indicates that plovers may use these areas at some point. However, most of the pod is dominated by non-plover habitat (tall sagebrush and greasewood). If mountain plovers are observed on the SDPA in the future, the avoidance and mitigation measures in this document, the RMP, and the Interim Drilling Policy would be followed to ensure no significant impact to mountain plovers.

Bald Eagle. Bald eagles typically build stick nests in the tops of large coniferous or deciduous trees along streams, rivers or lakes. This type of habitat is not present on the SDPA, therefore, bald eagles are not expected to nest on the pod. Bald eagles may utilize the SDPA during winter months when big game species are more concentrated on winter ranges. However, the SDPA does not support concentrated use by bald eagles and bald eagle use of the pod is likely incidental. Bald

eagles may feed on road-killed carrion in the general vicinity of the pod and workers should be educated about the danger of striking a bald eagle with a vehicle along the main highways and roads providing access to the SDPA (especially Wyoming Highway 789). The Proposed Action is not expected to impact bald eagles provided that the avoidance and mitigation measures in this document, the RMP, and the Interim Drilling Policy are implemented.

Canada Lynx. The Canada lynx is not expected to occur on the SDPA because of the lack of suitable habitat, therefore, the proposed action is not expected to impact Canada lynx.

Threatened and Endangered Fish Species

The lack of large river habitat within the project area precludes the occurrence of adults of the four species of endangered fish. Additionally, critical habitat has not been established anywhere in Wyoming for any of these species (Upper Colorado River Endangered Fish Recovery Program 1999). Yet, suitable habitat for spawning, age-0, and juveniles of these species may be present in the downstream portion of Muddy Creek and offsite in the Little Snake River, which are both within the greater Atlantic Rim project area.

Colorado Pikeminnow. Although one adult was collected from the Little Snake River in Carbon County, Wyoming in 1990, subsequent survey attempts to collect Colorado pikeminnow from this area of the Little Snake River by WGFD personnel failed to yield any other specimens (Baxter and Stone 1995). Although Muddy Creek and the Little Snake River may potentially support this species of fish at certain times, the current absence of this species downstream from the project area leads to the conclusion that this project would have no significant impact on this species.

Bonytail and Humpback Chub. Neither of these species has ever been reported within waters of the project area or immediately downstream from this project. However, the Little Snake River and although very unlikely, parts of Muddy Creek may have the potential to provide habitat for both bonytail and humpback chub.

Razorback Sucker. Suitable habitat for this species is not available on the project area and the species is not known from the Little Snake River drainage.

Within Muddy Creek, sediment levels may be elevated during construction of well access road crossings and road grade along and across the creek. Implementing reasonable precautions to limit offsite sediment movement from these areas would prevent substantial increases in sediment loadings in the downstream section of Muddy Creek and downstream from its confluence with the Little Snake River, and would avoid violation of Wyoming Water Quality Standards (WDEQ 1997; 2000). Because the limited water development and usage for this project are predicted to only affect subterranean aquifers related to the coal seams, surface flows will not be affected by water wells developed for this project.

Although occurrence of these endangered fish species has not been confirmed for the Muddy Creek drainage or immediately downstream in the Little Snake River, their probability of occurrence is highly unlikely. If any of these species are identified within the downstream portion of Muddy Creek or immediately downstream in the Little Snake River, the BLM should consult with the FWS and develop a protection plan for the fish. Given these precautionary measures, no adverse impacts to any of these species are expected to result from the implementation of the Proposed Action.

4.7.1.1.6 Species of Concern - Wildlife and Fish

Wildlife Species of Concern

The wildlife species of concern with the highest potential to occur on the SDPA are the burrowing owl, Columbian sharp-tailed grouse, and the Wyoming pocket gopher. The likelihood of the remaining species, northern goshawk, snowy plover, swift fox, and smooth green snake, occurring on the SDPA is low, therefore no impacts upon these species are expected with the Proposed Action. Burrowing owls are typically associated with prairie dog burrows. Burrowing owls may utilize prairie dog towns on the SDPA, however the total disturbance that would occur in prairie dog towns on the pod is small, therefore the proposed development is not expected to impact burrowing owls. No Columbian sharp-tailed grouse leks are located within 2 miles of the SDPA, and no winter habitat (upland shrub communities and wooded riparian areas) for Columbian sharp-tailed grouse is located on the pod. Therefore, use of the SDPA by Columbian sharp-tailed grouse would likely be minimal and no impacts are expected with the Proposed Action. The Wyoming pocket gopher is typically associated with lose gravely soils in greasewood plant communities. Although the Wyoming pocket gopher may be present on the SDPA, the small amount of disturbance associated with the proposed action is not expected to significantly impact the species if it is present. In summary, no impacts upon the wildlife species of concern are expected provided that avoidance and mitigation measures in this document, the RMP, and the Interim Drilling Policy are followed.

Wyoming BLM Fish Species of Concern

Three of the four species (roundtail chub, bluehead sucker, and flannelmouth sucker) are documented to occur within the project area and Colorado River cutthroat trout are known to occur immediately downstream. Thus, suitable habitat for spawning, age-0, juveniles, and adults of these species may be present in the both Muddy Creek and offsite in the Little Snake River, which are both within the greater Atlantic Rim project area. Dry Cow Creek and Cow Creek may also provide adult spawning habitat and age-0 rearing habitat for the three catostomid species.

Roundtail Chub. This species is common within the Little Snake River drainage and can also be found in Muddy Creek (Carbon County, Wyoming), a small perennial stream located in the southern portion of the Atlantic Rim project area (Baxter and Stone 1995).

Bluehead Sucker. This species is known to occur downstream from the proposed project area in the Little Snake River. Population sampling results (BLM 2000 and 2001) indicate the species is present, but rare, in Muddy Creek.

Flannelmouth Sucker. This species is known to occur in Muddy Creek and downstream in the Little Snake River (Baxter and Stone 1995).

Colorado River Cutthroat Trout. This species occurs downstream from the Muddy Creek confluence in the Little Snake River and may be transient in Muddy Creek.

If measures to prevent downstream sedimentation are implemented to prevent offsite movement of fluid spills or disturbed soils caused by construction activities under the Proposed Action (WDEQ 1997; 2000), implementation of the Proposed Action is not likely to adversely effect BLM sensitive fish species in either Muddy Creek or downstream in the Little Snake River. Implementation of reasonable precautions to limit offsite sediment movement should prevent violations of Wyoming Water Quality Standards (WDEQ 1997; 2000). Further, to avoid depletion of Muddy Creek and Little Snake River surface flows, and subsequent adverse impacts to these species due to surface

or near surface water removals for well site use, water will be drawn from deep aquifer wells. In addition, stream crossings of perennial downstream sections of Muddy Creek would be located and constructed to provide passage for upstream spawning migrations of these sensitive native fishes. Given these precautionary measures, implementation of this alternative is not likely to adversely effect the roundtail chub, bluehead sucker, flannelmouth sucker, or Colorado River cutthroat trout.

4.7.1.2 Alternative A - No Action

Impacts to wildlife under the No Action alternative would be similar to Alternative A but of a lesser magnitude.

4.8 RECREATION

4.8.1 Impacts

4.8.1.1 Proposed Action

Impacts to recreation would involve a temporary displacement of some hunters, particularly during construction and drilling. Some hunters perceive these activities as displacing game species and creating an environment that detracts from the hunting experience. Hunter displacement would be highest during the general deer and elk season when the most users are in the area. The proposed drilling schedule would limit displacement to one season. Hunters could relocate to other hunting areas near the SDPA.

Undisturbed landscapes, isolation and solitude are often important to non-consumptive users such as photographers and back packers. Project related disturbances that adversely impact the characteristic landscape could also contribute to a decline in the recreation experience for these users. There may be some displacement of these users to more pristine landscapes such as the Adobe Town Wilderness study area. The recreation experience for those continuing to use the area would be less satisfying than use under the pre-disturbance conditions described in Chapter 3.

The affects described above would diminish substantially once drilling and construction were completed. However, they would persist at reduced levels. Patterns of game use and population densities would change slightly as a result of the project. Some long term displacement, permanent or relocation, of hunters and non-consumptive users would result from the project. Further, there may be reduced levels of satisfaction for those recreationists who might continue to use the area. Overall impacts to the recreation resource would be minimal due to the short term nature of drilling and construction activities, and concentrated locations of activities.

4.8.1.2 Alternative A - No Action

Under the No Action alternative, similar impacts as described for the Proposed Action are expected to occur, but of a lesser magnitude.

4.9 VISUAL RESOURCES

4.9.1 Impacts

4.9.1.1 Proposed Action

As noted in Chapter 3, Affected Environment, the SDPA is not pristine. Several off-road vehicle tracks exist throughout the area used by ranchers, recreationists and mineral developers.

Short term impacts to the visual resource associated with construction and drilling in the SDPA would include contrasts in line, form, color, and texture. These contrasts would be associated with drilling rigs, construction equipment, service trailers and the general industrial character of drilling activities. Additional impacts may occur from fugitive dust produced by construction activities.

The SDPA would not be visible from Wyoming State Highway 789 or from the community of Baggs. Potential reviewers of the contrasts described would be few in number and would include hunters and other recreationists, ranchers, and oil and gas field workers.

In the BLM's VRM rating system, the severity of impact is related to the scenic quality, sensitivity level, and distance zone of the affected environment. In general, short term impacts would be most severe where the level of contrast is high and highly visible to potentially large numbers of viewers.

The short term impacts would exceed the level of contrast permitted in Class 3 areas; however, because the contrasts would be seen by relatively few viewers and would be short in duration, they would be considered minimal.

Permanent production facilities, as described in Chapter 2, would remain once well drilling activities were completed. The presence of permanent production facilities would have continued impacts in the long term.

These facilities would create contrasts in line, form, color, texture and overall pattern in the landscape and would remain for the duration of the project. Fugitive dust impacts as part of on-going operations would also persist. However, as noted for short term impacts, these contrasts would not be visible to many viewers. With the application of measures described in Chapter 2, the level of contrast would not exceed Class 3 standards. Levels of contrast would, however, detract from the experience of those recreating in the immediate area.

Additional fixed facilities such as access roads (improved and unimproved roads and overland routes) would be required to service production facilities. Roads would create additional contrasts in line, color and texture to those described above. With appropriate mitigation, the level of contrast would not exceed Class 3 standards. However, contrasts could diminish the experience of motorists and recreationists.

4.9.1.2 No Action

Under the No Action alternative the status of the visual resource would be similar, but somewhat less due to the smaller number of wells than that described above.

4.9.2 Mitigation Summary

BLM would recommend that facilities be sited below ridge lines and screened from known vantage points.

4.9.3 Residual Impacts

As a result of siting facilities where they would be least observed, fewer recreationists may be inclined to leave the area.

4.10 CULTURAL RESOURCES

4.10.1 Impacts

4.10.1.1 Proposed Action

Direct impacts would primarily result from construction related activities. Activities considered to have the greatest effect on cultural resources include blading of well pads and associated facilities, and the construction of roads and pipelines. Sites located outside the SDPA would not be directly affected by the construction activities. If the area of the site crossed by earth disturbing activities does not possess the qualities that contribute to the eligibility of the site, the project is judged to have no effect. Alteration of the environment abutting eligible historic properties may be considered an adverse effect in the form of a direct impact.

Indirect impacts would not immediately result in the physical alteration of the property. Indirect impacts to prehistoric sites primarily would result from unauthorized surface collecting of artifacts which could physically alter the sites. At historic sites this could include bottle collecting and the introduction of visual impacts.

Contributing segments of historic trails would be avoided by a ¼ mile buffer zone or outside the visual horizon, whichever is closer. These actions are designed to provide protection for the historic trail corridors.

Block surveys have been completed in the SDPA, as required by the Interim Drilling Policy. Identification of important sites prior to disturbance would minimize impacts to cultural resources. The likelihood exists that buried sites could be disturbed during construction. Implementation of measures described in Chapter 2 would reduce impacts and minimize the loss of information.

4.10.1.2 No Action

Under this alternative, impacts to cultural resources would be similar to those described above, but of a lesser magnitude.

4.11 SOCIOECONOMICS

4.11.1 Impacts

4.11.1.1 Proposed Action

Socioeconomic Impacts of the Proposed Action would be largely positive. The project would enhance regional economic conditions and generate local, state and federal government tax and royalty revenues. The relatively small, short-term drilling and field development workforce would not generate significant demand for temporary housing or local government services.

4.11.1.1.1 Economic and Employment Effects

The Proposed Action as described in Chapter 2 of this assessment would involve capital investment in gas wells, produced water injection wells, gathering systems, compression stations and other field infrastructure. The project would require between 16 and 36 drilling and field development workers over a 30 to 45 day period and one operations worker over a 15 year period (see Table 2-1).

Development and operation of the Proposed Action would require goods and services from a variety of local and regional contractors and vendors, from the oil and gas service industry and from other industries. Expenditures by the proponent for these goods and services, coupled with employee and contractor spending, would generate economic effects in Carbon County, southwest Wyoming and the nation as a whole.

The direct and indirect effects of CBM on the Wyoming economy have not been specifically analyzed (Taylor 2000). However, the BLM commissioned a study in the mid-1990's to assess the economic effects of a variety of activities which occur on public lands in southeast Wyoming, including oil and gas development. The study, prepared by the University of Wyoming Agricultural Economics Department (UW), estimated that one job (direct and indirect) was created for every 203 million cubic feet (MMCF) of natural gas produced in the state, at a gas sales price of $1.30/MCF (University of Wyoming 1997). This ratio yields a peak of about eight direct and indirect jobs associated with the Proposed Action in the second year of production, decreasing to about one job during the fifteenth year of production. Because gas sales prices may be substantially different in the future than in the 1997 study (this analysis uses a range of $3.00 to $2.25/MCF) and the employment, infrastructure and maintenance requirements for CBM are lower than traditional natural gas development, actual employment per MMCF of gas produced from the Proposed Action could be higher or lower than the UW estimate.

Similarly, the UW study found that $1,606 of economic activity was generated in southwest Wyoming by every MMCF of traditional natural gas production, at a sales price of $1.30/MCF. Using this ratio, total economic activity generated by the Proposed Action would range from a high of about $2.6 million during the second year of production, decreasing to about $188 thousand in the fifteenth year of production. Again, gas sales price estimates used for this assessment are higher than $1.30/MCF, which would tend to push economic activity higher, but the lower labor and development requirements of CBM fields would tend to reduce resultant levels of economic activity per unit of gas produced.

Although the UW study did not specifically address CBM development, it is reasonable to assume that the direct and indirect economic benefits of the Proposed Action would be positive.

4.11.1.1.2 Carbon County Oil and Gas Activity

Successful completion of the Proposed Action would slightly increase natural gas production in Carbon County, particularly during the first several years of production. For example, the Proposed Action would result in an estimated 970,000 MMCF of methane during the second year of production. This is about one percent of total 1999 Carbon County natural gas production. Proposed Action methane production is anticipated to decrease each year thereafter (see Figure 4-2).

In 1999, a total of 127 APD's were issued for Carbon County. The 6 wells associated with the Proposed Action would be about five percent of the 1999 APD level for the county. However, the relatively short drilling time and low infrastructure and labor requirements associated with CBM wells would not result in a substantial increase in drilling activity or drilling employment in the county.

4.11.1.1.3 Effects on Economic Activities in the Vicinity of the Proposed Action

As outlined in Section 3.11, economic activities occurring in the vicinity of the Proposed Action include other oil and gas exploration, grazing, and recreation, primarily hunting.

Properly performed, the pre-construction planning and coordination activities outlined in Chapter 2 would avoid economic effects on other oil and gas interests in the vicinity of the Proposed Action.

Figure 4-2. Projected Proposed Action-Related Total Annual Gas Production.

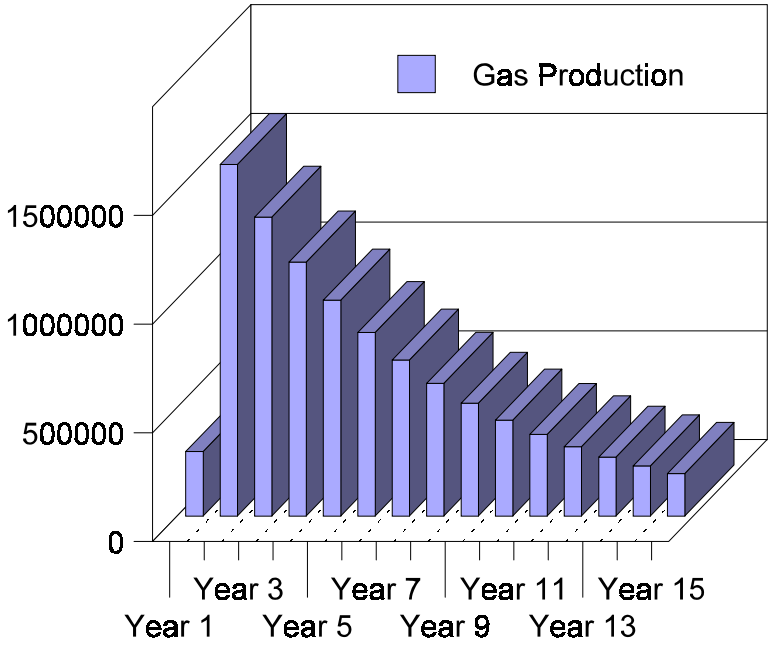

Source: PEDCO

Economic effects on grazing activities would include losses of forage due to temporary and long-term disturbance. As described in Section 4.6, temporary disturbance would result in a minor loss of AUM's. If these AUM's are not replaced in other allotments, the associated economic activity in Carbon County would also be lost. A recent UW study estimated that each AUM of cattle grazing was worth $65.07 in total economic impact in the region (UW 2000). Using this estimate, the Proposed Action would result in a loss of $130 in total economic activity during field development, and $65 annually for the life of the project.

According to the recreation analysis conducted for this assessment (see Section 4.8), some hunters and other recreationists may be temporarily displaced from the area associated with the Proposed Action during drilling and field development, and perhaps a lesser number during project operations. The effects of the Proposed Action on the Carbon County hunting and recreation economy are anticipated to be minimal, given the short term nature of the drilling and field development period, the relatively few hunters and recreationists who use the area and the potential that hunters and recreationists may use other areas within Carbon County during this period.

4.11.1.1.4 Population Effects

Population effects of the Proposed Action would be minimal. Some of the skills and services required for the Proposed Action are available in the local labor pool, although the recent increase in both conventional and CBM drilling activity in southwest Wyoming has absorbed much of the available oil and gas service workforce. Of the short-term demand for 16 to 36 drilling and field development workers, a portion would likely be contractors from other areas of Wyoming (Rock Springs, Gillette, Casper) and from the Craig area of northern Colorado. The remainder would be hired from the local workforce. Given the short duration of the drilling phase under two months), most non-local workers would be likely to relocate to Carbon County single status, i.e., without family members.

Non-local workers would attempt to obtain temporary housing as close to the work site as possible, most likely in Baggs. Workers not able to secure temporary housing in Baggs might locate in Rawlins, Rock Springs or Craig, Colorado. Given the current level of drilling and field development activity occurring in Wamsutter, it is unlikely that Sun Dog project drilling and field development workers would find temporary housing accommodations in that community.

Given the relatively small workforce and short-term nature of the drilling and field development phase of the Proposed Action, it is likely that area businesses would accommodate the increase in economic activity with existing employees.

For the operations phase, it is assumed that eight total direct and indirect jobs in south west Wyoming would be generated by the Proposed Action during the peak operations year, decreasing to one job by the fifteenth year. Consequently, the population associated with the operations phase of the Proposed Action would be minimal.

4.11.1.1.5 Temporary Housing Demand

The relatively small Proposed Action-related demand for temporary housing during drilling and field development would be accommodated by existing temporary housing resources. Demand may be accommodated in Baggs, Rawlins, Rock Springs and/or Craig, depending on seasonal considerations and other oil and gas industry activity.

4.11.1.1.6 Law Enforcement and Emergency Response

The relatively small level of field development and operations activity would be accommodated by existing law enforcement and emergency management resources.

4.11.1.1.7 Fiscal Effects

The Proposed Action would generate tax revenues including:

- local ad valorem property taxes on production and certain field facilities;
- sales and uses taxes to the State of Wyoming, Carbon County and its incorporated municipalities;
- mineral royalties to the federal government, a portion of which are returned to the State and local governments; and
- state severance taxes.

Ad valorem and severance taxes and federal mineral royalties are calculated using gas prices contained in the January 2001 Wyoming Consensus Revenue Estimating Group (CREG) projections ($3.00/MCF for 2002 and $2.25 MCF thereafter).

4.11.1.1.7.1 Ad Valorem Taxes

The Proposed Action would generate ad valorem property tax to Carbon County, the Wyoming School Foundation Fund, Carbon County Schools and various taxing districts within the county. Ad valorem taxes would be generated from two sources: (1) the fair market value of methane produced and sold; and (2) the value of certain capital facilities within the well fields (all underground facilities associated with wells are exempt by state statute). Well field facilities are depreciated after the first year of production.

Constant 1999 Carbon County mill levies were used to prepare these estimates. In reality some mill levies are set each year by the Carbon County Commissioners, officials of the various special and school districts and the state; some change each year. Mill levies reflect the revenue needs of the taxing entity and estimates of assessed valuation within the entity. Natural gas is assessed based on the previous year's production, therefore the revenues associated with these levies would be received the year following these estimates.

According to estimates provided by the proponent, gas production peaks in the second year of production and declines thereafter over the projected life of the project. Consequently, production-related ad valorem property tax revenues associated with the Proposed Action would be highest in the third year of production, and diminish annually thereafter.

Under the assumptions described above, ad valorem tax revenues from production and facilities would total $850,000 over the life of the project, including about $166,000 for the county and its districts based on 12 mills, $14,000 to the weed and pest district based on 1 mill, $622,000 for schools based on 45 mills (12 for the State School Fund, 6 for the countywide school levy and 27 for the school district levy and other school taxes) and $47,000 for a variety of special districts (museum, cemetery, water conservancy and conservation) based on levies totaling 3.42 mills.

Table 4-1. Estimated Ad Valorem Property Tax Revenues Tax over the life of the Proposed Action

Carbon County (12 mills)	Weed & Pest (1 mill)	Total Schools (45 mills)	Special Districts (3.42 mills)	Total
$166,000	$14,000	$622,000	$47,000	$850,000

Source: Blankenship Consulting LLC based on production estimates provided by PEDCO. All estimates rounded.

4.11.1.1.7.2 Federal Mineral Royalties and Wyoming Severance Taxes

The federal government collects a 12.5 percent royalty on the fair market value of gas produced from federal leases, less production and transportation costs. Half of mineral royalty revenues are returned to the state where the minerals were produced. In Wyoming, a portion of the state's share is distributed to local governments and to the Wyoming School Foundation Fund. Actual Mineral Royalty revenues collected would vary based on actual production levels, gas sales prices, and production and transportation costs.

Table 4-2. Estimated Federal Mineral Royalties and Severance Tax over the 15- year life of the Proposed Action

Federal Mineral Royalties	Wyoming Severance Tax
$1,415,000	$594,000

Source: Blankenship Consulting LLC based on production estimates provided by PEDCO. All estimates rounded.

The State of Wyoming collects a six percent severance tax on the fair market value of natural gas produced within the state. Federal mineral royalty payments and production and transportation costs are exempt from this tax. The state uses revenues from this fund for a variety of purposes (e.g., General Fund, Water Development Fund, Mineral Trust Fund, and Budget Reserve) and returns a portion to counties and municipalities. Estimated severance tax revenues are displayed in Table 4-2. Actual severance tax revenues would vary based on actual production levels, gas sales prices, and production and transportation costs. Actual severance tax revenues may be less than these estimates if a portion of the gas is used for production purposes.

4.11.1.1.7.3 Sales and Use Tax

Wyoming levies a four percent sales and use tax on the gross receipts of tangible goods and certain services (drilling services are exempted). The state returns 28 percent of the revenue (less administrative costs) to the county and municipalities where the taxes were collected. Carbon County also levies a one percent local option sales and use tax which is distributed to the county and its municipalities. A one percent facilities tax, which is used for capital facilities in the county, is set to expire before the Proposed Action would take effect and has not been included in this assessment.

During the field development phase of the Proposed Action, an estimated $263,000 would be spent for goods and services subject to state and local sales and use taxes. This amount would generate about $7,600 for the State of Wyoming and about $5,600 for Carbon County and its municipalities.

4.11.1.1.8 Local Attitudes and Opinions

The 1996 resident survey conducted for the Carbon County Land Use Plan (discussed in Section 3.11.6) did not specifically address CBM development, but it provides a basis for assessing attitudes and opinions about issues associated with the Proposed Action. For example, it is reasonable to assume that survey respondents would have similar attitudes about CBM development activities that are similar to traditional natural gas development activities (i.e., seismic exploration, drilling, field development and production).

However, the importance that survey respondents placed on water conservation and the availability of water to support future land use suggests that the produced water aspects of CBM development could be of concern to them. Successful implementation of the produced water re-injection program described in Section 2.1.3.3.2 may mitigate those concerns.

According to the Carbon County Land Use Plan, resident response to the survey suggests “a need to balance the conservation of natural resources and the economic viability of resource-based industries in the county.” This sentiment coupled with partial support for leasing more federal lands for oil and gas development (about 50 percent countywide, somewhat higher in every community but Rawlins and Saratoga) suggests that development of CBM resources would be generally supported by residents of the Little Snake River Valley, as long as they perceive that such development does not damage water resources or wildlife habitat, or degrade the quality of recreation resources in the area. The conclusions of the analyses conducted for this assessment are that impacts to water, wildlife and recreational resources would not be significant. If these conclusions are correct, the Proposed Action should not generate high levels of dissatisfaction among Carbon County residents. Conversely, if unanticipated impacts to water resources, wildlife habitat or recreation resources occur, resident dissatisfaction with the Proposed Action could be high.

4.11.1.1.9 Environmental Justice

The Proposed Action would not directly effect the social, cultural, or economic well-being and health of minorities or low income groups. The SDPA is relatively distant from population centers, so no populations would be subjected to physical impacts from the Proposed Action.

4.11.1.2 No Action

Implementation of the No Action alternative would result in socioeconomic conditions similar to but less than those described above.

4.12 TRANSPORTATION

4.12.1 Impacts

4.12.1.1 Proposed Action

4.12.1.1.1 Federal and State Highways

The Proposed Action would generate increases in traffic volumes on highways providing access to the project area and on county and operator-maintained roads within the project area. These increases would result from the movement of project-related workers, equipment and materials to and from the project area to perform drilling, field development, well service, field operations and reclamation activities.

Table 2-1 in Chapter 2 shows the estimated average number of trips associated with various well field activities. According to information provided by the proponent, drill rigs, water trucks and other items of heavy equipment would be transported to the SDPA and remain within the project area until drilling is completed. Materials and supplies would be delivered on a weekly basis and stockpiled within the project area at a staging area. Drilling and completion crews and other personnel would commute to the project area daily, except for drilling engineers who would stay at a trailer within the at the drill site during the workweek. Based on these plans and the estimates contained in the table, the Proposed Action would generate between 15 to 20 round trips per day over a 45 day period during drilling and field development. After the drilling and field development phase is completed, Proposed Action-related traffic would average one or two trips per day, with slightly higher peak periods when maintenance activities are performed on wells and facilities.

Based on these assumptions and estimates, the incremental increase in area traffic associated with the Proposed Action would not result in a significant deterioration of level of service for I-80 or SH 789 (Rounds 2000).

Given the relatively small increment of traffic and the relatively short duration of the drilling and field development phase, it is unlikely that the Proposed Action would result in a measurable increase in accident rates on federal and state highways; during the operations phase, the probability of an increase in accident rates attributable to the Proposed Action is negligible.

4.12.1.1.2 County Roads

The Proposed Action would result in increases in traffic on the county roads that provide access to the SDPA (CCR 605 and CCR 608). The relatively small, short-term increases in traffic are unlikely to result in significant deterioration of the roads or substantial increases in accidents. The primary effects of Proposed Action-related traffic on county and BLM roads would be to accelerate road maintenance requirements. The cost associated with accelerated road maintenance requirements on county roads may be offset by the Proposed Action-related revenues generated to county government, which are described in Section 4.11.

Increased traffic would generate an increased in the potential for vehicle/stock accidents, although the slower speeds required by the condition of county roads tend to minimize the frequency of such accidents (Warren 2000). Coordination with livestock operators during sensitive periods (e.g., cattle movements and calving season) could further reduce potential for vehicle/stock accidents.

4.12.1.1.3 Internal Roads

Section 2.1.2.1 (Access Road Construction) describes the measure proposed by the proponent to develop the transportation network necessary to access wells and ancillary facilities within the SDPA. Based on these proposals, an estimated 2.3 miles of new roads would be constructed within the project area. The proponent would be responsible for constructing and maintaining new and improved roads within the project area, therefore no fiscal impacts are anticipated for the BLM or Carbon County.

4.12.1.2 Alternative A - No Action

Under this alternative approximately 2.8 miles of road have been previously approved for construction. The implementation of this alternative would require continued use of Federal, State and county roads for access, resulting in similar types of impacts as those described under the Proposed Action.

4.13 HEALTH AND SAFETY

4.13.1 Impacts

4.13.1.1 Proposed Action

Health and safety impacts of the Proposed would include a relatively low risk to project workers from industrial accidents, firearm accidents and and natural disasters. There would be a slight increase in risk of traffic accidents and range fires for the general public during drilling and field development and a negligible increase during field operations.

Occupational Hazards

Two types of workers would be employed by the Proposed Action: oil and gas workers, who had a1998 annual accident rate of 4.0 per 100 workers, and special trade contractors, who had a non-fatal accident rate of 8.9 per 100 workers (U.S. Department of Labor, Bureau of Labor Statistics 1998). These rates compare with an overall private industry average for all occupations of 6.2 per 100 workers.

There has been recent concern among CBM drillers that worker safety standards and training used for conventional oil and gas activities may not be appropriate for the CBM industry (Rock Springs Rocket Miner 2001). During 2000, five workers died and six others were seriously injured in CBM-related accidents in Campbell County, Wyoming. The Wyoming Occupational Health and Safety Administration, Worker's Safety Division (OHSA) is meeting with CBM company officials to consider changes in worker safety standards and revised training requirements.

During the 45-day drilling and field development phase of the project when a peak of 36 workers may be employed, the statistical probability of injuries is low. During field development, the annual statistical probability of injuries is minimal, given the low level of employment (one worker).

The US BLM, OSHA, USDOT and Wyoming OGCC and OHSA each regulate certain safety aspects of oil and gas development. Adherence to relevant safety regulations on the part of the Proponent and enforcement by the respective agencies would reduce the probability of accidents.

Additionally, given the remote nature of the project area, and the relatively low use of these lands by others (primarily grazing permittees and hunters), occupational hazards associated with the Proposed Action would mainly be limited to employees and contractors rather than the public at large.

Pipeline Hazards

Increasing the miles of gathering line within the analysis area would increase the chance of a pipeline failure. Accidents rates for gas transmission pipelines are historically low. Nationwide, injuries associated with gas transmission pipelines averaged 14 per year from 1990 through 1996, fatalities averaged one per year and incidents such as ruptures averaged 79 per year (U.S. Department of Transportation 1998). Therefore, the relatively small amount of new pipeline associated with the Proposed Action, coupled with the low probability of failure and the remoteness of the project area would result in minimal risk to public health and safety. Signing of pipeline rights-of-way would reduce the likelihood of pipeline ruptures caused by excavation equipment--particularly in the vicinity of road crossings or areas likely to be disturbed by road maintenance activities.

Other Risks and Hazards

Highway safety impacts are discussed in Section 4.12 (Transportation). Sanitation and hazardous material impacts would be avoided or reduced by the implementation of the mitigation measures outlined in Section 2.1.7.2.16.

The potential for firearms-related accidents would occur primarily during hunting season. If drilling and field development occurs during this season the substantial activity in the project area would encourage hunters to seek more isolated areas thus reducing the potential for accidents. During

operations, the relatively few personnel on site would result in minimal risk of firearms-related accidents.

The risk of fire in the analysis area would increase under the Proposed Action. This is an unavoidable impact associated with construction activities, industrial development and the presence of fuels, storage tanks, natural gas pipelines and gas production equipment. However, this risk would be reduced by the placement of facilities on pads and locations that are graded and devoid of vegetation which could lead to wildfires. In the event of a fire, property damage most likely would be limited to construction or production related equipment and range resources. Fire suppression equipment, a no smoking policy, shutdown devices and other safety measures typically incorporated into gas drilling and production activities would help to minimize the risk of fire. There would be a heightened risk of wildfire where construction activities place welding and other equipment in close proximity to native vegetation. Given the limited public use and presence in the project area, the risk to the public would be minimal. There would be a small in increase in risk to area fire suppression personal associated with the Proposed Action.

Based on the foregoing assessment, risks to public health and safety should not increase as a result of the Proposed Action.

4.13.1.2 Alternative A - No Action

Under the No Action alternative, health and safety risks would be the similar to those described under the Proposed Action, but of a lesser magnitude.

4.13.2 Mitigation Summary

The mitigation measures described in Section 2.1.7 should be sufficient to mitigate risks to public health and safety.

4.13.3 Residual Impacts

Risk to health and safety of workers, contractors and other users of the project area associated with industrial accidents, transportation accidents, shooting accidents and natural disasters would remain for the life of the project. However, these risks would be small, given the remoteness of the area, the few employees and visitors anticipated and the proposed mitigation measures.

4.14 NOISE

4.14.1 Impacts

4.14.1.1 Proposed Action

Noise associated with construction and natural gas production operations can create a disturbance that affects human safety (at extreme levels) or comfort as well as modifies animal behavior. Determining activities that exceed the maximum standards is not a simple issue since perception of sound varies with intensity and pitch of the source, air density, humidity, wind direction, screening/focusing by topography or vegetation, and distance to the observer. Noise levels in excess of the 55 dBA maximum standards can occur at construction and production operations. Under typical conditions, excess levels decline below the level of significance (55 dBA) at 3,500 feet from the source. Construction-related impacts would be short-term, lasting as long as construction activities were ongoing at well sites, access roads, pipelines, and other ancillary facilities such as compressor sites. Noise would be created over a longer term at the individual well sites as a result of production facilities.

Given the low human population densities in the project area, construction and development operations under the Proposed Action would be sufficiently distant from residences that none would likely be affected by construction or development operations. Overall noise produced by construction and support services equipment during peak activity periods would be moderate because of its dispersed and short-term nature.

4.14.1.2 No Action

Implementation of the No Action Alternative would result in impacts similar to those described under the Proposed Action, but of a lesser magnitude.

4.14.2 Mitigation Summary

The BLM may require that noise levels be limited to no more than 10 dBA above background levels at sage grouse leks.

4.14.3 Residual Impacts

Where indications are that noise levels are above 10 dBA at lek locations, the implementation of the mitigation measures should minimize the impact of noise from production facilities on strutting sage grouse.

4.15 CUMULATIVE IMPACTS

Cumulative impacts are those that would result from the incremental impacts of the Proposed Action when added to past, present, and reasonably foreseeable future actions (RFFA's). Reasonably foreseeable development is that development likely to occur within the SDPA, or cumulative impact assessment area (CIA) within the next 5 years. CIA areas vary between resources and are generally based on relevant landscapes, resources, projects, and/or jurisdictional boundaries.

The only major resource development currently proposed near the project area is the exploration activity allowed under the Interim Drilling Policy for the Atlantic Rim Coalbed Methane area. The interim drilling policy allows a maximum of 200 coalbed methane wells within the Atlantic Rim project area, for research and exploratory purposes, during the interim period in which the Atlantic Rim EIS is prepared. Wells will only be allowed in the nine pods the operators have proposed and a maximum of only 24 coalbed methane wells will be allowed within any pod, regardless of multiple zones to be evaluated. Surface-disturbing activities for these 200 wells may affect an estimated 650 acres, including an estimated 60 miles of new road access (new roads associated with the interim drilling program will likely be in the form of spur roads from the existing road network) and an estimated 100 miles of water and gas flowlines. If productive, and following reclamation, long-term disturbance associated with the 200 well interim drilling program would likely affect an estimated 200 acres for the LOP. Total distance between Pod 1 and Pod 9 is about 40 miles. The distances between the individual pods vary, from 1 ½ miles between pods 2 and 3, to over 6 miles between pods 7 and 8 (see Figure 1-2).

The Sun Dog pod is part of Pod #6 of the 200 well interim drilling program. Double Eagle Petroleum and Mining Company intends to drill 14 wells in the Cow Creek Unit of Pod #6, as part of the interim drilling program. These wells will be analyzed in a separate EA due to development by a separate operator using different methods of water disposal.

Past or existing actions on or in the vicinity of the SDPA that continue today and have major influences on the area include the road network; oil and gas wells; ranching/livestock facilities (i.e. fences, stock watering facilities, ranch houses, power lines, a pipeline etc.); and previously approved CBM wells and associated facilities.

The CIA area for soils, vegetation and wetlands, and water resources is the 219,500-acre portion of the Muddy Creek Watershed which overlaps the Atlantic Rim project area. To date, 109 wells have been drilled within this area. Of that total, 59 oil and gas wells have been plugged and abandoned and are probably within various stages of reclamation; 37 oil and gas wells are in

various stages of completion, resulting in approximately 337 acres of long-term disturbance (related facilities disturbance included); and 13 CBM and water injection wells, and related facilities, have been drilled, resulting in approximately 13 acres of long-term disturbance. Pods 5, 6, 7, and 8 of the interim drilling program are located within this CIA area and would account for approximately 93 acres of additional long-term disturbance. The existing disturbance of 359 acres resulting from current oil and gas activities, added to the approximate 93 acres associated with the four pods under the 200 CBM well interim drilling program proposed for the Atlantic Rim area totals 452 acres (0.2 percent) of long-term oil and gas related disturbance within the 219,500-acre Muddy Creek CIA area.

Table 4-3 provides a summary of the cumulative impacts analysis requirements for each of the resource values in the other eight pods associated with interim development in Pod 6.

4.15.1 Geology/Minerals/Paleontology

Existing, proposed, and reasonably foreseeable actions would not affect landslide deposits and would be unlikely to trigger geologic hazards such as landslides, mudslides, debris flows, or slumps, no incremental increase in cumulative impacts associated with geologic hazards would occur. If the terms of the interim drilling policy are followed and proper well pad and facility siting, construction, and reclamation techniques are used the cumulative impacts to the surface geologic environment would be minimized. Proposed and RFFA's would require the restoration of disturbed lands to predisturbance conditions and as such would minimize topographic alterations. Standard stipulations and project- and site-specific construction and reclamation procedures would be required for additional development on federal lands and these measures would further minimize cumulative impacts of surface geologic environment.

With the exception of CBM, no major surface mineral resources would be impacted by the implementation of the RFFA's. Protection of subsurface mineral resources is provided by the BLM and WDEQ casing and well bore cementing policy.

No cumulative adverse impacts are expected to occur to potential fossil resources beyond those discussed in Section 4.1.1.1 as a result of the Proposed Action in combination with existing, proposed, and reasonably foreseeable actions. Adoption of mitigation measures prescribed in that section could foster cumulative beneficial impacts of the project by either resulting in the discovery of new fossil resources or providing paleontologists with evidence of absence of such resources in the area.

4.15.2 Air Quality

Cumulative impacts from emissions resulting from the implementation of past oil and gas projects and the proposed 200 well program would be much the same as those found on similar oil and gas projects such as Continental Divide. Emissions from oil and gas facilities approved prior to 1999 were included in the 3,000 well air quality analysis prepared for the Continental Divide EIS, of which only 2,130 wells were approved. The emissions from the 200 well interim drilling program would still be covered under the air quality model completed for the Continental Divide project.

Table 4-3. Cumulative Impacts Analysis Matrix - Cumulative Impacts Associated with the Sun Dog Pod (Pod 6).

RESOURCE VALUE	POD1	POD2	POD3	POD4	POD5	POD7	POD8	POD9	DISCUSSION
Geology	X	X	X	X	X	X	X	X	All wells completed in the Almond Formation of the Mesaverde Group
Air Quality	X	X	X	X	X	X	X	X	All in Laramie Air Basin
Soils	O	O	O	O	X	X	X	0	Limit impact discussion to the Muddy Creek CIA area
Surface water	O	O	O	O	X	X	X	O	Pod 6 located in Muddy Creek CIA area; Pod 6 would have no impacts to other watersheds
Ground water	X	X	X	X	X	X	X	X	Production of ground water for all pods from Almond Formation
Vegetation	O	O	O	O	X	X	X	O	Limit impact discussion to the Muddy Creek CIA area
Range Resources	O	O	O	O	X	X	O	O	Pods 5, 6, 7 in the Doty Mountain Allotment
Wildlife	X	X	X	X	X	X	X	X	Sage grouse habitat in all pods, no drilling within 1/4 mile of leks & within sage grouse crucial wintering areas. No drilling in prairie dog towns without black-footed ferret clearance
Crucial WR	X	X	X	X	X	X	X	X	Pod 7 pronghorn CWR; Pods 8 & 9 mule deer CWR
Recreation	X	X	X	X	X	X	X	X	Minimal displacement of hunters & recreationists
Visual	X	X	X	X	X	X	X	X	Minimal displacement of recreationists
Cultural	O	O	O	O	O	O	O	O	Block surveys required in each pod, with additional mitigation; no cumulative relationship
Socioeconomic	X	X	X	X	X	X	X	X	All pods within the same socioeconomic area
Transportation	X	X	X	X	X	X	X	X	Increased traffic
Health and Safety	X	X	X	X	X	X	X	X	Major related health and safety issues related to travel
Noise	O	O	O	O	O	O	O	O	Localized affect on wildlife

X - Discussed in the EA; O - Not discussed in the EA (no cumulative relationship)

4.15.3 Soils

The CIA area for soils includes the 219,500-acre portion of the Muddy Creek Watershed which overlaps the Atlantic Rim Project Area. Cumulative impacts include soil impacts from on-going exploration and development activities, recently constructed projects, and RFFA's, as described in Section 4.15. Cumulative long-term disturbance of 452 acres would be approximately 0.2 percent of the 219,500-acre Muddy Creek Drainage CIA area. This amount of cumulative impacts upon the soil resources would be minimal, provided that all mitigation and avoidance measures are implemented

4.15.4 Water Resources

The water resources CIA area includes the 219,500-acre portion of the Muddy Creek Watershed which overlaps the Atlantic Rim Project Area, which encompasses some 219,500 acres. Existing and future disturbance consists of approximately 452 acres, or 0.2 percent of the Muddy Creek Drainage CIA area. This cumulative disturbance would minimally impact surface water or groundwater quantity or quality.

The impacts predicted to occur are based upon the current knowledge of the geology, CBM resources and groundwater hydrology in the area. Both methane and water production rates from future CBM wells, and specifics related to groundwater injection, cannot be accurately predicted. These variables could potentially affect the configuration of field production, gas processing, and gas and water conveyance facilities; however, none of these changes are expected to measurably affect the conclusions presented herein. Federal regulations provide for additional analysis if substantial changes in resource conditions would alter the conclusions reached herein.

Cumulative impacts to surface water resources would be maximized shortly after the start of construction activities, decreasing in time due to reclamation efforts, then stabilizing during the production/operation period when routine maintenance of wells and ancillary facilities takes place. Additionally, all roads, well locations and facility infrastructure would be regularly inspected and maintained to minimize erosion, sedimentation and surface water quality impairment.

Impacts to groundwater within the project area are not anticipated. The springs in the area are classic "contact" springs which result from permeable rocks overlying rocks of much lower permeability. In the Atlantic Rim project area, the permeable Browns Park Formation overlies the less permeable Almond Formation, which is a member of the Mesaverde Group. Water easily percolates through the Browns Park, and is perched on the lower permeability clay and shales of the Almond. Where this contact is exposed by erosion, a line of springs can result. No impact to these springs is foreseen from pumping on the Almond Formation coal seams. The source of the springs is infiltrating precipitation, and this source would not be removed by pumpage of the underlying coal seams.

Due to thick confining layers, wells completed in water-bearing strata above or below the Almond coal seams are not likely to be impacted. Wells completed in the Almond Formation coal seams in close proximity (less than one mile) to the pod could be impacted, but it is not likely that wells of this type exist. As described in Chapter 2, water analysis is being completed to determine if water from the Almond Formation coal seams contributes to the surface water system in the Colorado River Basin.

Cumulative impacts to the groundwater resources within the Mesaverde Group would be limited to a decline in hydrostatic head in coal seams within the Almond Formation resulting from development of the Sun Dog pod and subsequent pods associated with the interim drilling program. For purposes of this EA, existing impacts to groundwater resources within the Mesaverde Group resulting from prior development are so limited as to be non-existent.

Current and future oil and gas exploration and development activities in the project area must comply with federal and state environmental regulations. Therefore, impacts to groundwater quantity or quality on a cumulative scale are not expected. This is particularly true given the fact that wells would be completed in accordance with Onshore Order No. 2 and the recent BLM guidelines that reduce the potential for groundwater contamination.

4.15.5 Vegetation and Wetlands

The CIA area for vegetation and wetlands includes the 219,500-acre portion of the Muddy Creek Watershed which overlaps the Atlantic Rim Project Area, and encompasses some 219,500 acres. Cumulative impacts includes impacts to vegetation and wetlands from on-going exploration and development activities, recently constructed projects, and RFFA's.

Cumulative long-term disturbance of 452 acres would be approximately 0.2 percent of the219,500-acre Muddy Creek Drainage CIA area. This amount of vegetation loss would be minimal, and no direct impacts of aquatic and riparian areas are expected because current proposed project activities would avoid these areas. Provided that soil erosion mitigation measures are followed, no indirect aquatic and riparian impacts are expected. Cumulative impacts upon both vegetation and wetland resources would be minimal, provided that all mitigation and avoidance measures are implemented.

The distribution of plant species of concern is likely limited within the Atlantic Rim area due to a lack of suitable habitat for most of the species. The required application of existing FWS and BLM monitoring and mitigation measures is expected to provide adequate protection for threatened, endangered, and special status plant species. Thus, impacts to Special Status Species are expected to be minimal.

4.15.6 Range Resources and Other Land Uses

4.15.6.1 Range Resources

Pods 5, 6, and 7 of the 200 well interim drilling program are located within the Doty Mountain Grazing Allotment. Based on the known LOP disturbance to Pod 6 (including the SDPA and Double Eagle Cow Creek Unit) and an average per pod for Pods 5 and 7, the total LOP disturbance would be approximately 69 acres, as a result of CBM drilling operations on the three pods. The approximate 69 acres of long-term disturbance equates to a reduction of six AUM's (0.09 percent) from the total of 6,974 available, which would be a minimal impact.

4.15.6.2 Other Land Use

Potential cumulative impacts to other land uses are limited to recreation resources and wildlife habitat, which are discussed under the sections dealing with those resources.

4.15.7 Wildlife and Fish

Wildlife

The CIA area varies with species, as indicated within the respective analyses. The disturbance of wildlife habitat resulting from implementation of the interim drilling program of the nine pods would reduce habitat availability and effectiveness for a variety of common mammals, birds and their predators. Initial phases of surface disturbance would result in some direct mortality to small mammals, displacement of songbirds, along with a slight increase in mortality from increased vehicle use in the areas of the nine pods. Due to the relatively high production potential of these species and the relatively small amount of habitat disturbed (0.006% of the Atlantic Rim project area), small mammal and songbird populations would quickly rebound to pre-disturbance levels following reclamation, and no long-term impacts to these populations are expected.

Activities associated with the construction phase of each of the nine pods in the interim drilling program would likely temporarily displace antelope, mule deer, and elk; however, once construction is completed they would likely habituate and return to pre-disturbance activity patterns. Elk winter range does not occur on any of the pods and should not be affected by project activities. Pronghorn CWR occurs only on Pod #7. The proportion of pronghorn CWR within the Baggs Herd Unit that would be affected over the short-term and long-term, would be 0.03 and 0.008 percent, respectively. Mule deer CWR occurs on Pods 8 and 9. The proportion of mule deer CWR within the Baggs Herd Unit that would be affected over the short-term and long-term, would be 0.05 and 0.01 percent, respectively. Construction activities on CWR would be limited to May 1 - Nov 14. Provided that mitigation measures contained in Chapter 2 and the Interim Drilling Policy are implemented, cumulative impacts to big game populations within their respective herd units are expected to be minimal.

Sage grouse occupy the area of the nine pods year-round and make seasonal use of the habitats. One crucial winter habitat unit and two leks occur on Pod #1, and a portion of Pod #8 lies within the 1/4-mile NSO radius of a lek. Approximately 11,005 acres (56.2 percent of the total surface area of the nine pods) overlaps the 2-mile radius of the historical leks in the area. Therefore, approximately 365 (3.3%) and 112 (1.0%) acres of potential sage grouse nesting habitat would, respectively, be affected by short-term and long-term disturbances associated with the production activities. Considering the vast amount of potential nesting habitat available, the 112-acre loss would be minimal. Sage grouse within Sierra Madre Upland Game Management Unit (Area 25) would only be minimally impacted from the cumulative LOP-200-acre disturbance associated with the proposed action of the nine pods, provided the implementation of the NSO's, interim drilling guidelines, seasonal closures, reclamation, and mitigation measures provided are followed.

Although no active raptor nests were located on the nine pods during 2001 aerial surveys, implementation of protection measures identified in Chapter 2, Section 4.7.1.1.4, and the IDP are expected to protect the raptor populations within the 9-pod interim drilling area. Therefore, only minimal cumulative impacts to raptors within Muddy Creek Watershed are likely to occur.

Acreages and burrow densities that are adequate to support black-footed ferrets (200 or more acres with 8 or more burrows per acre) occur on only two of the nine pods on the project area (Sun Dog and Pod #7). Black-footed ferret surveys have been conducted on both of these pods and no ferrets or ferret sign were found. The Sun Dog Pod was surveyed in October of 2000 and September of 2001. Pod #7 was surveyed in August of 2001. Because of the lack of evidence that black-footed ferrets occur on the project area and the fact that black-footed ferret surveys are

required (per interim drilling guidelines) on all prairie dog towns, no impacts to this species are expected as the result of the proposed 200 well interim drilling activities.

Fish

Currently, four BLM sensitive fish species are known to occur in Muddy Creek and downstream in the Little Snake River (Baxter and Stone 1995). Although unlikely, four Endangered fish species have the potential to occur immediately downstream in the Little Snake River. Cumulative impacts from existing, proposed, and reasonably forseeable development may influence offsite Endangered fisheries resources and therefore potential impacts are evaluated within the boundaries of the Muddy Creek watershed. Additionally, direct impacts to the four BLM sensitive species through increased sediment levels or surface water depletions in Muddy Creek may result from the project's implementation.

Perennial surface waters within the analysis area are limited. Additionally, no "contact" between the surface springs and deep water aquifers planned for use during this project are anticipated. As described in Chapter 3, water used in drilling and construction activities would be obtained from wells drilled into aquifers that are geologically isolated from the Little Snake River and not generally associated with surface water expression in the Muddy Creek watershed. Therefore, no surface water depletions that would affect BLM sensitive, Threatened, or Endangered fish species would occur. If the existing, proposed, or reasonably forseeable development leads to surface water depletion in either Muddy Creek or the Little Snake River (both tributary to the Colorado River and falling under the Colorado River Compact), adverse impacts to the BLM sensitive species could occur, and potential impacts to the four downstream Endangered species would require the initiation of consultation with the FWS.

Proposed development in the pods is not expected to result in reductions in BLM sensitive, Threatened, or Endangered adult fish numbers, or their exclusion from, or degradation to their spawning areas within the Muddy Creek watershed or in downstream waters of the Little Snake River. Additionally, permitted disturbances associated with the exploratory CBM pod development and other development within the Muddy Creek watershed would employ erosion control measures and construction techniques suitable to limit offsite soil movement and downstream degradation of fisheries habitat due to sediment inputs.

The mitigation and avoidance measures set forth in this EA, and the application of standard wetland and surface water protection and reclamation measures to protect fisheries resources are likely to be adequate to protect surface waters and the threatened, endangered, and BLM fish species of concern. Thus, the cumulative impacts to fish species found within the affected watersheds are expected to be minimal

The required application of existing FWS and BLM monitoring and mitigation measures to the proposed CBM interim drilling program is expected to provide adequate protection for threatened, endangered, and special status species.

4.15.8 Recreation

BLM does not have statistics on historical use of the project area by recreation groups which could be used to determine trends in cumulative impacts on recreation use and displacement. Cumulatively, overall impacts to the recreation resource are expected to be minimal with some temporary displacement of hunters and recreationists during the short-term drilling periods. Some

long-term displacement of hunters and non-consumptive users may occur, and there may be reduced levels of satisfaction for those who might continue to use the area.

4.15.9 Visuals

As discussed in Chapter 3, existing visual qualities in the SDPA and adjacent lands have already been affected by ongoing natural gas development, including road building and pipeline construction. Existing, proposed, or reasonably forseeable development would add to the level of impact to visual resources in the immediate area. The composite experience of those traveling through the area, particularly on back roads, is one of a modified landscape. Contrasts in line, form, color and texture from development activities begin to dominate the viewers experience. These conditions would increase the likelihood that viewers, particularly back country recreationists, would be dissatisfied with the visual component of their recreation experience. However, the cumulative impact of existing, proposed, or reasonably forseeable development on visual resources would still be consistent with the current VRM Class 3 designation with implementation of mitigation measures proposed by PEDCO in Chapter 2, Section 2.1.8.2.11.

4.15.10 Cultural Resources

Cultural resources on public lands, including archaeological sites and historic properties, are protected by federal law and regulations. Current CBM operations must comply with these protective regulations, and BLM has required the completion of cultural resource inventories prior to surface-disturbing activities. These inventories have been used to identify sites potentially eligible for inclusion on the National Register of Historic Places and to identify sites which BLM has required past exploration and development activities to avoid.

Because Class III cultural resource inventories have been completed on the SDPA, the potential for increased impacts on cultural artifacts would be minimized. By avoiding known cultural and historical sites during the layout of drill sites, access roads, and pipeline corridors, the potential for incremental increases in cumulative impacts would be avoided. Completion of cultural resource inventories would have a beneficial, cumulative impact on the level of cultural information about the project area. Some unintentional damage to subsurface resources could occur during grading or excavation activities. However, implementation of resource protection and mitigation measures described in Chapter 2, Section 2.1.8.2.15 would protect such resources upon discovery.

4.15.11 Socioeconomics

Southwest Wyoming is currently experiencing an increase in the pace and level of natural gas development. Drilling and field development is occurring in areas near the SDPA including Continental Divide/Wamsutter II, South Baggs, Mulligan Draw, Creston/Blue Gap, Hay Reservoir and potentially, Desolation Flats. While this surge in development will result in increased employment, income and tax revenues in the region, it will also result in increased housing demand and increased demand for local and state government facilities and services. Rawlins is also experiencing some growth associated with the opening of a new prison facility.

Communities such as Rawlins and Rock Springs are still below peak population levels of the 1980's and have infrastructure and housing to accommodate some population growth. Smaller communities near the SDPA, such as Wamsutter, are struggling to accommodate population growth associated with development of the currently approved natural gas fields identified above.

Neither the relatively small, short-term drilling and field development workforce or the minimal operations employment and activity associated with the existing, proposed, or reasonably forseeable development would add appreciably to cumulative housing and local government service demand in the area. Drilling and field development associated with these activities would be completed some time before the initiation of the proposed Atlantic Rim CBM project.

If the current accelerated pace of drilling and field development in southwest Wyoming continues, the potential for degradation of the quality of recreation resources in the area would increase. If Carbon County residents perceive that degradation of recreation resources has occurred, levels of dissatisfaction among some residents and area visitors would correspondingly increase.

4.15.12 Transportation

Increased oil and gas development in western Carbon County and eastern Sweetwater County will result in increased traffic on affected segments of I-80 and WSH 789. The condition of these highways is adequate to accommodate existing levels of traffic and some increases (Rounds 2000).

Currently known cumulative impacts on CCR 605 and CCR 608 would be limited to grazing and recreation activities described in Chapter 3, and occasional traffic associated with oil and gas exploration activities. The increased traffic associated with drilling and field development of the interim drilling program would accelerate maintenance requirements; however, associated costs may be offset by project-related revenues generated, which are described in Section 4.11.

4.15.13 Health and Safety

Cumulative health and safety impacts would be limited to those associated with the 200 well interim drilling proposal and existing grazing and recreation activities. Occasional traffic and activity associated with oil and gas exploration activities would generate small increases in risks to project workers and the public. Cumulative impacts to health and safety conditions are anticipated to be similar to those described for the Proposed Action.

4.15.14 Noise

Noise would result from on-going construction, drilling, and CBM operations during the life of the project. Increased traffic on existing transportation system roads within the project area would occur, thus adding to existing traffic noise. Given the current and anticipated low traffic volumes, and dispersed nature of traffic and CBM operations within the SDPA, the projected additions to cumulative, traffic-related noise impacts would be minimal.

CHAPTER 5

CONSULTATION AND COORDINATION

5.0 CONSULTATION AND COORDINATION

An environmental assessment (EA) must be prepared when a federal government agency considers approving an action within its jurisdiction that may impact the human environment. An EA aids federal officials in making decisions by presenting information on the physical, biological, and social environment of a proposed project and its alternatives. The first step in preparing an EA is to determine the scope of the project, the range of action alternatives, and the impacts to be included in the document.

The Council on Environmental Quality (CEQ) regulations (40 CFR, Parts 1500-1508) require an early scoping process to determine the issues related to the proposed action and alternatives that the EA should address. The purpose of the scoping process is to identify important issues, concerns, and potential impacts that require analysis in the EA and to eliminate insignificant issues and alternatives from detailed analysis.

The Sun Dog CBM project EA was prepared by a third party contractor working under the direction of and in cooperation with the lead agency for the project, which is the Bureau of Land Management (BLM), Rawlins Field Office, Rawlins, Wyoming.

5.1 PUBLIC PARTICIPATION

A scoping notice was prepared and submitted to the public by the BLM on June 14, 2001, requesting input into the proposed Atlantic Rim Coalbed Methane Project. Scoping documents were sent out to the public listed on the BLM mailing list, as well as organizations, groups, and individuals requesting a copy of the scoping document.

As a part of the scoping process, the interim drilling programs proposed by PEDCO and other operators were included in the scoping notice. The scoping period ended on July 25, 2001.

During preparation of the EA, the BLM and the consultant interdisciplinary team (IDT) have communicated with, and received or solicited input from various federal, State, county, and local agencies, elected representatives, environmental and citizens groups, industries, and individuals potentially concerned with issues regarding the proposed drilling action. The contacts made are summarized in the following sections.

The following organizations/individuals either provided comment or were provided the opportunity to comment during the scoping period.

FEDERAL OFFICES

U.S. Bureau of Land Management
Wyoming State Office
U.S. Congresswoman Barbara Cubin
U.S. Senator Mike Enzi
U.S. Senator Craig Thomas
U.S. Army of Corps of Engineers
U.S. Bureau of Reclamation
U.S. Environmental Protection Agency
U.S. Fish and Wildlife Service

CHAPTER 5: CONSULTATION AND COORDINATION

STATE AGENCIES

Governor Jim Geringer
State Engineer's Office
State Senators
Wyoming Department of Environmental Quality
Wyoming Game and Fish Department
State Representatives
Wyoming State Planning Coordinator
Wyoming Department of Transportation
Wyoming Oil and Gas Conservation Commission

COUNTY GOVERNMENT

Carbon County Commissioners
Carbon County Planning Commission

MUNICIPALITIES

Mayor-Baggs
Mayor-Rawlins
Mayor-Wamsutter

NATIVE AMERICAN TRIBES

Northern Arapahoe Tribal Council
Ute Mountain Tribe
Shoshone-Arapahoe Joint Tribal Council
Shoshone Tribal Council
Ute Tribal Council
Uinta-Ouray Tribal Council

GRAZING PERMITTEES

Weber Ranch
Salisbury Livestock Company
Three Forks Ranch Corporation
Mike Sheehan
H.B. Lee
Espy Livestock
PH Livestock Company
Montgomery Livestock Company
Stratton Sheep Company
Sam Morgan
Robert Orchard
Matt Weber
Jack Creek Land and Cattle Company

LEASE AND ROW HOLDERS

Stone & Wolf, LLC
Merit Energy Company
Benson–Montin-Greer
North Finn, LLC
P&M Petroleum Management
KCS Mountain Resources, Inc.

LANDOWNERS

This scoping notice has been sent to 111 landowners potentially affected by the proposal.

LOCAL MEDIA

Casper Star-Tribune
Rock Springs Rocket Miner
Wyoming State Tribune/Eagle
KRAI - Craig, Colorado
KRKK - Rock Springs
KTWO - Casper
KUWR - University of Wyoming
Rawlins Daily Times
Wyoming State Journal
Gillette News-Record
KRAL - Rawlins
KSIT - Rock Springs
KTWO TV - Casper
Northwest Colorado Daily News

OTHER AGENCIES, INDUSTRY REPRESENTATIVES, INDIVIDUALS, AND ORGANIZATIONS

Audubon Society
Wilderness Society
The Nature Conservancy
Field Museum of Natural History
Department of Geology
Montana Oil Journal
Murie Audubon Society
Petroleum Association of Wyoming
Sierra Club
Wyoming Outdoor Council
Wyoming Stockgrowers Association
Wyoming Woolgrowers Association
Ivan Herold
National Wildlife Federation
Carbon County Stockgrowers
Wyoming Association of Professional Archaeologists
Independent Petroleum Association of Mountain States
The Nature Conervancy
Rocky Mountain Oil & Gas Association
Wyoming Farm Bureau Federation
Wyoming Public Lands Council
Wyoming Wildlife Federation
Vern Brodsho
Little Snake River Conservation District

5.2 LIST OF PREPARERS

The following tables identify the core BLM IDT (Table 5-1) and the consultant IDT (Table 5-2) that were principally involved with preparing this EA.

Table 5-1. List of BLM Interdisciplinary Reviewers.

Name	Responsibility
RAWLINS FIELD OFFICE	
Brenda Vosika-Neuman	BLM IDT Lead
John Spehar	Planning and Environmental Coordinator
Mary Apple	Public Affairs
Krystal Clair	Visual Resources/Recreation
Sandra Meyers	Cultural Resources
Kip Purington	Petroleum Engineer
Andy Warren	Vegetation/Range Issues
Mark Newman	Paleontology/Geology
Susan Foley	Soils/Pipeline Construction/Reclamation
Ken Peacock	Hydrology/Water Quality
Frank Blomquist	Riparian/Wetland; Wildlife/T & E Issues
Mike Bower	Fisheries Biologist
Janelle Wrigley	Realty Specialist
WYOMING STATE OFFICE	
Susan Caplan	Air Quality

Table 5-2. List of Consultant Interdisciplinary Team EA Preparers.

Principal Interdisciplinary Team		
Name	**Affiliation**	**Responsibility**
Gary Holsan	Gary Holsan Environmental Planning	Interdisciplinary Team Leader, Project Manager, Recreation, Visual Resources
Mike Evers	Western Water Consultants	Water Resources
Larry Hayden-Wing	Hayden-Wing Associates	Wildlife/Fisheries; Special Status Plants, Animals and Fish; Vegetation and Wetlands
Brenda Schladweiler	BKS Environmental Associates	Soils
George Blankenship	Planning Information Corporation	Socioeconomics, Transportation, Range, Other Land Use
Jim Zapert, Susan Eatinger	TRC Environmental Corporation	Air Quality
Jana Pastor	Western Archaeological Services	Cultural Resources
Gustav Winterfeld	Erathem-Vanir Geological Consultants	Geology/Paleontology, Mineral Resources
Technical Support Team		
Travis Olson	Hayden-Wing Associates	Wildlife Biologist
Jeffrey Winstead	Hayden-Wing Associates	Wildlife Biologist, Cartographer
Scott Mullner	Hayden-Wing Associates	Fisheries Biologist
Connie Hedley	Hayden-Wing Associates	Document Editing and Production
Sarah Hamilton	Hayden-Wing Associates	Document Editing and Production

REFERENCES CITED

Anderson, S.H. and C.T. Patterson. 1988. Characteristics of bald eagle winter roosts in Wyoming. Prairie Nat. 20:147-152.

Baxter, G.T. and M.D. Stone. 1995. Fishes of Wyoming. Wyoming Game and Fish Department, 290pp.

Biggins, D., B. Miller, B. Oakleaf, A. Farmer, R. Crete, and A. Dood. 1989. A system for evaluating black-footed ferret habitat. Report prepared for The Interstate Coordinating Committee by The Reintroduction Site Group. 25pp.

Braun, C.E., T. Britt, and R.O. Wallestad. 1977. Guidelines for maintenance of sage grouse habitats. Wildlife Society Bulletin 5:99-106.

Breithaupt, B.H. 1985. Non-mammalian vertebrate faunas from the Late Cretaceous of Wyoming. Wyoming Geological Association 36th Annual Field Conference Guidebook, p. 159-175.

Bower, P.W., J.C. Miller, M.W. Bergstrom, L.L. Harrell, and A.D. Gardner. 1984. *The Sheehan Site.* Cultural Resource Management Report No. 20. Archaeological Services of Western Wyoming College, Rock Springs.

Call, M.W. 1974. Habitat requirements and management recomendations for sage grouse. U.S. Department of the Interior, Bureau of Land Management Technical Note, Denver, CO. 37pp.

Call, M.W. and C. Maser. 1985. Wildlife habitats in managed rangeland: the Great Basin of southeastern Oregon - sage grouse. Pacific Northwest Forest and Range Experiment Station, U.S. Forest Service Technical Report PNW-187. 30pp.

Carbon County Weed & Pest District. December, 2000. Personal Communication.

Carnes, S. 2000. Clerk, Town of Wamsutter. Personal communication with George Blankenship, Blankenship Consulting LLC, Denver, CO. June 7, 2000.

Cerovski, A. 2000. Non-game Bird Biologist, Wyoming Game and Fish Department. Personal Communication with Dawn Martin, Hayden-Wing Associates, Laramie, WY.

Clair, K. 2000. Outdoor Recreation Planner, US BLM Rawlins Field Office. Personal communication with George Blankenship, Blankenship Consulting LLC, Denver, CO. June 27, 2000.

Collentine, M., R. Libra, K.R. Feathers, and L. Hamden. 1981. *Occurrence and Characterisitcs of Groundwater in the Great Divide and Washakie Basins, Wyoming*. Water Resources Research Institute, University of Wyoming, Laramie, Wyoming.

Colorado Department of Public Health and Environment, Air Pollution Control Division (CDPHE-APCD). 1996. Background pollutant concentration information on file at the Colorado Department of Public Health and Environment, Air Pollution Control Division. Denver, Colorado.

REFERENCES CITED

Colson, J. 2000. Sheriff, Carbon County, WY. Personal communication with George Blankenship, Blankenship Consulting LLC, Denver, CO. June 22, 2000.

Cote', W.A. 1984. Application for Air Quality Permit to Construct for Chevron Chemical Company's Phosphate Project. Addendum I: Air Quality Related Values. TRC Environmental Consultants, Englewood, Colorado.

Craig Chamber of Commerce. 2000. Website listing for motels. Craig, CO. June 2000

Dinsmore, J.J. 1981. Mountain plovers, a synthesis of the literature and an annotated bibliography. 24pp.

_____. 1983. Mountain Plover *(Charadrius montanus)*. Pages 185-196 *in* J.S. Armburster (ed). Impacts of coal surface mining on 25 migratory bird species of high federal interest. USFWS Publ. OBS-83/35.

Dorn, R.D. 1992. Vascular plants of Wyoming, second edition. Mountain West Publishing, Cheyenne, WY.

Driver, N.E., J.M. Norris, and G. Kuhn. 1984. *Hydrology of Area 53, Northern Great Plains and Rocky Mountain Coal Provinces, Colorado, Wyoming, and Utah*. U.S.G.S. WRI Open File Report 83-765.

Druse, S.A., W.R. Glass, G.F. Ritz, and M.L. Smalley. 1994. Water Resource Data, Wyoming Water Year 1993. USGS Water-Data Report WY-93-1.

Evans, B. 2000. Foreman, Carbon County Road and Bridge Department, Rawlins Wyoming. Personal communication with George Blankenship, Blankenship Consulting LLC. June 8 and July 12, 2000.

Fagerstone, K.A. 1987. Black-footed ferret, long-tailed weasel, and least weasel. Pages 548-573 in M. Novak, J.A. Baker, M.E. Obbard, and B. Mallock (eds). Wild furbearer management and conservation in North America. Ministry of Natural Resources, Ontario.

Fertig, W. and G. Beauvais. 1999. Wyoming Plant and Animal Species of Special Concern. Wyoming Natural Diversity Database, Laramie, Wyoming. Unpublished Report.

Fertig, W. 2000. Status of blowout penstemon (*Penstemon haydenii*) in Wyoming. Report prepared for the Wyoming Cooperative Fish and Wildlife Research Unit, US Fish and Wildlife Service, and Wyoming Game and Fish Department by the Wyoming Natural Diversity Database, Laramie, Wyoming.

Fertig, W. 2001. 2000 survey for Blowout penstemon (*Penstemon haydenii*) in Wyoming. Prepared for the Bureau of Land Management Wyoming State Office by the Wyoming Natural Diversity Database, University of Wyoming, Laramie, Wyoming.

REFERENCES CITED

Freethey, G.W. 1987. Upper Colorado River Basin Regional Aquifer Systems Analysis-Mesozoic Rock in Colorado, Utah, Wyoming, Arizona, and New Mexico, pp. 57-70, in J.S. McLean and A.I. Johnson (Eds). Regional Aquifer Systems of the United States: Aquifers of the Western Mountain Area. Amer. Water Res. Assoc. Mono. Ser. No. 14. 23rd Annual AWRA Conference and Symposium, Nov. 1-6, 11987, Salt Lake City, UT. 229 pp.

Gill, J.R., E.A. Merewether, and W.A. Cobban. 1970. Stratigraphy and nomenclature of some Upper Cretaceous and Lower Tertiary rocks in south-central Wyoming. U.S. Geological Survey Professional paper 667, 50p.

Graul, W.D. 1975. Breeding biology of the mountain plover. Wilson Bull. 87:6-31.

Grieve, P. 2000. Western United Realty, Baggs, WY. Personal communication with George Blankenship, Blankenship Consulting LLC, Denver, CO. June 26, 2000.

Hall, D.H. 1987. *Archaeological Investigations Within the Little Snake River Basin Colorado and Wyoming.*. Master's Thesis on file. Submitted to the Department of Anthropology, Colorado State University, Fort Collins, Colorado.

Hall, E.R. and K.R. Kelson. 1959. The mammals of North America. The Ronald Press Company, New York. 1083 pp.

Hamilton, D.S. 1993, Stratigraphy and Coal Occurrence of the Upper Cretaceous Mesaverde Group, Sand Wash Basin, Gas Research Institute, from the Topical Report: Geologic and Hydrologic Controls on Coalbed Methane: Sand Wash Basin, Colorado and Wyoming, pp. 23-49.

Hawkins, M. 2000. Drifter's Inn Motel, Baggs, WY. Personal communication with George Blankenship, Blankenship Consulting LLC, Denver, CO. June 26, 2000.

Hayden-Wing, L.D., D.B. Costain, J.L. Hull, M.R. Jackson, and T.B. Segerstrom. 1986. Movement patterns and habitat affinities of a sage grouse population in northeastern Wyoming. Pages 207-226 *in* R.D. Commer, T.G. Bauman, P. Davis, J.W. Monarch, J. Todd, S. Van Gytenbeek, D. Wills, and J. Woodling editors. Proceedings for Issues and Technology in the Management of Impacts on Western Wildlands. Glenwood Springs, CO. Feb 4-6, 1985.

Heath, R.C. 1984. Groundwater regions of the United States. U.S. Geological Survey Water-Supply Paper 2242. U.S. Government Printing Office, Washington, D.C. 78 pp.

Herold, R. 2000. Baggs Medical Clinic. Personal communication with George Blankenship, Blankenship Consulting LLC, Denver, CO. June 22, 2000.

Hewitt, H. 2000. Chairman, Carbon County Planning Commission. Personal communication with George Blankenship, Blankenship Consulting LLC. June 20, 2000.

REFERENCES CITED

Hiatt, K. 2000. Rawlins - Carbon County Chamber of Commerce. Personal communication with George Blankenship, Blankenship Consulting LLC, Denver, CO. June 22, 2000.

Higley, S.T. 1996. *Numerical Simulation and Groundwater Storage Relationships within the Muddy Creek Aquifer System*. M.S., Department of Civil and Architectural Engineering, University of Wyoming.

Kantrud, H.A. and R. Kologiski. 1982. Effects of soils and grazing on breeding birds of uncultivated upland grasslands of the northern Great Plains. Wildl. Res. Report 15. 9pp.

Knopf, F.L. 1994. Avian assemblages on altered grasslands. Studies in Avian Biology. 15:247-257.

Latham, M. A. 1999 *Class III Cultural Resource Inventory and Evaluation of Eleven Prehistoric Sites: Little Snake Supplemental Irrigation Water Supply Project, High Savery Dam and Reservoir Alternative, Carbon County, Wyoming*. Burns and McDonnell.

Leachman, B. and B. Osmundson. 1990. Status of the mountain plover: a literature review. U.S. Fish Wildl. Serv., Fish and Enhancement, Golden, CO. 83pp.

Lyon, A.G. 2000. The potential effect of natural gas development on sage grouse (*Centrocercus urophasianus*) near Pinedale, Wyoming. M.S. Thesis. University of Wyoming, Laramie, WY.

Martner, B.E. 1986. *Wyoming Climate Atlas*. Lincoln: University of Nebraska Press.

Massey, R. 1989. Wyoming Comprehensive Historic Preservation Plan. Report Prepared for Archive, Museums, and Historic Department. Wyoming State Historic Preservation Office, Cheyenne.

Merrill, E.H., T.W. Kohley, M.E. Herdendorf, W.A. Reiners, K.L. Driese, R.W. Marrs, and S.H. Anderson. 1996. The Wyoming gap analysis project final report. University of Wyoming, Laramie, WY. 109 pp + appendices.

Metcalf, M.D. 1987. Contributions to the Prehistoric Chronology of the Wyoming Basin In *Perspectives on Archaeological Resources Management in the Great Plains*, edited by A. J. Osborn and R. C. Hassler, pp. 233-261. I & O Publishing Company, Omaha, Nebraska.

Metcalf, M.D. and K. Black. 1991. *Archaeological Excavations at the Yarmony Pit House Site, Eagle County, Colorado.* Colorado Cultural Resource Series No. 31, Denver.

Miller, M. 1997. *Hollow Victory: The White River Expedition of 1879 and the Battle of Milk Creek.* University Press of Colorado, Niwot.

Minckley, W.L. and J.E. Deacon. 1991. Battle Against Extinction - Native Fish Management in the American West. The University of Arizona Press, Pheonix.

Oakleaf, B., H. Downing, B. Raynes, M. Raynes, and O.K. Scott. 1982. Wyoming avian atlas. Wyoming Game and Fish Dept. and Bighorn Audubon Society. 87pp.

Parrish, T.L., S.H. Anderson, and W.F. Oelklaus. 1993. Mountain plover habitat selection in the Powder River Basin., Wyoming. Prairie Naturalist 25(3):219-226.

Pederson Planning Consultants. 1997. Carbon County draft land use plan: A report to the Carbon County Board of Commissioners from the Carbon County Planning Commission. 400 pp.

_____. 1998. Carbon County Land Use Plan. Rawlins, WY. June 16, 1998.

Porter, M.A. 1999. Spatial relationships of sympatric mule deer and elk in south-central Wyoming. M.S. Thesis. University of Wyoming, Laramie

Rawlins Daily Times. 2000a. *Rag Shoshone coal mine closes Thursday*. August 30, 2000.

Rawlins Daily Times. 2000b. *Realtors believe market can handle housing needs*. August 5, 2000.

Reeve, A., F. Lindzey, and S. Buskirk. 1986. Historical and recent distribution of the lynx in Wyoming. Wyoming Coop. Fish Wildl. Res. Unit., Laramie, Wyoming.75pp.

Rock Springs Rocket Miner. 2001. Wamsutter Officials Asking for Assistance. February 8, 2001.

Roehler, H.W. 1990. *Stratigraphy of the Mesaverde Group in the Central and Eastern Greater Green River Basin, Wyoming, Colorado, and Utah*. U.S. Geological Survey Professional Paper 1508. Washington: U.S. Government Printing Office.

Rosenberg, R. 1994. IMACS Site Form Addendum for Site 48CR3648.

Rounds, K. Wyoming Department of Transportation. Cheyenne, WY. Personal communications with George Blankenship, Blankenship Consulting LLC. August 23, 2000 and December 1, 2000.

Schnal, J. 2000. Director, Carbon County Economic Development Corporation. Personal communication with George Blankenship, Blankenship Consulting LLC, Denver, CO. June 19, 2000.

Sisler, J.F. 1996. Spatial and seasonal patterns and long-term variability of the composition of the haze in the United States: An analysis of data from the IMPROVE network. Cooperative Institute for Research in the Atmosphere, Colorado State University. Fort Collins, Colorado.

Steenhof, K., S.S. Berlinger, and L. H. Fredrickson. 1980. Habitat use by wintering bald eagles in South Dakota. Journal of Wildlife Management 44:798-805.

Thompson, K.W. and J.V. Pastor. 1995. *People of the Sage: 10,000 Years of Occupation in Southwest Wyoming*. Cultural Resource Management Report No. 67. Archaeological Services of Western Wyoming College, Rock Springs.

Tyus, H.M., D. Burdick, R.A. Valdez, C.M. Haynes, T.A. Lytle, and C.R. Berry. 1982. Fishes of the Upper Colorado River Basin: distribution, abundance, and status. Pages 12-70 *in* W.H. Miller, H.M. Tyus, and C.A. Carlson, editors. Fishes of the Upper Colorado River System: Present and Future. Western Division of the American Fisheries Society. 131pp.

Upper Colorado River Endangered Fish Recovery Program. 1999. Website of the Upper Colorado River Endangered Fish Recovery Program. http://www.r6.fws.gov/coloradoriver.

U.S. Department of the Interior - Bureau of Land Management (USDI-BLM). 1972. Divide Grazing: Draft Environmental Impact Statement. Rawlins Field Office, Rawlins, WY.

_____. (USDI-BLM). 1987. Draft resource management plan/environmental impact statement for the Medicine Bow-Divide Resource Area, Rawlins District, Wyoming, BLM-WY-ES-87-008-4410. U.S. Department of the Interior, Bureau of Land Management. 500 pp.

_____. (USDI-BLM). 1988a. Proposed resource management plan/final environmental impact statement for the Great Divide Resource Area (formerly Medicine Bow and Divide Resource areas) Rawlins District, Wyoming. U.S. Department of the Interior, Bureau of Land Management, Great Divide Resource Area, Rawlins District Office, Rawlins, WY. 249pp.

_____. (USDI-BLM). 1988b. National Environmental Policy Act Handbook (H-1790-1). U.S. Department of the Interior, BLM. Washington, D.C. 67pp. plus 9 apps.

____. (USDI-BLM). 1990. Great Divide Resource Area record of decision and approved resource management plan. Rawlins District Office. Rawlins, Wyoming. 74 pp.

_____. (USDI-BLM). 1996. Moxa Arch and Fontenelle environmental impact statements, air quality technical support document: Cumulative impact analysis of southwestern Wyoming Natural Gas Development Projects on air quality. Bureau of Land Management, Kemmerer and Green River Resource Areas, Rock Springs Districs, Rock Springs, Wyoming.

_____. (USDI-BLM). 1999. Draft Environmental Impact Statement South Baggs Area Natural Gas Development Project, Carbon County, Wyoming. Rawlins, WY. May, 1999.

_____. (USDI-BLM). 2001. BLM Wyoming sensitive species policy and list. Instruction Memorandum Number WY-2001-040, Issued by A. Pierson, Cheyenne, Wyoming.

U.S. Department of the Interior - Fish and Wildlife Service. (USDI-FWS). 1989. Black-footed ferret survey guidelines for compliance with the Endangered Species Act. U.S. Department of the Interior, Fish and Wildlife Service, Denver, CO and Albuquerque, NM. 15pp.

_____. (USDI-FWS). 1993. Colorado River Endangered Fishes Critical Habitat. Draft Biological Support Document. Salt Lake City, Utah.

_____. (USDI-FWS). 2000. Letter from Michael M. Long, Field Supervisor for Wyoming Field Office, Cheyenne, WY. February 8, 2000. Listed Endangered, Threatened and Candidate species potentially impacted by coalbed methane development in Carbon County, Wyoming.

US Geological Survey (USGS). 1980. *Water Resources Data for Wyoming, Water Year 1978*. v. 2. USGS Water-Data Report WY-78-2.

University of Wyoming. 1997. College of Agriculture, Cooperative Extension Service, Agricultural Economics Department. Southwest Wyoming Resource Evaluation; Socioeconomic Evaluation Part 1 - Historical Context, Final Report. Prepared for the USDI-BLM, Wyoming State Office. Laramie, WY. May, 1997.

Vosika Nueman, B. 2000. USBLM NEPA Coordinator, Rawlins Field Office. Personal communication with George Blankenship, Blankenship Consulting LLC, Denver, CO. May 5, 2000.

Warren, A. 2000. USBLM Range Management Specialist, Rawlins field Office. Personal communication with George Blankenship, Blankenship Consulting LLC, Denver, CO. June 14, 2000.

Weigel, J.F. 1987. Sources of Hydrologic Data on Mesozoic Formations in the Upper Colorado River Basin and Comparison of Data Analysis Methods, pp. 71-80, in J.S. McLean and A.I. Johnson (Eds). Regional Aquifer Systems of the United States: Aquifers of the Western Mountain Area. Amer. Water Res. Assoc. Mono. Ser. No. 14. 23rd Annual AWRA Conference and Symposium, No. 1-6, 1987, Salt Lake City, UT. 229 pp.

Welder, G.E. and L.J. McGreevy. 1966. *Groundwater Reconnaissance of the Great Divide and Washakie Basins and Some Adjacent Areas, Southwestern Wyoming*. USGS Hydrologic Investigation Atlas HA-219.

Western Regional Climate Center (WRCC). 2001. Historical climate data for Baggs, Wyoming. Western Regional Climate Center WWW Server. Online. http://www.wrcc.sage.dri.edu.

Wiens, J.A. and M.I. Dyer. 1975. Rangeland avifaunas: Their composition, energetics, and role in the ecosystem. Pages 145-181, In D.R. Smith, Technical Coordinator, Symposium on Management of Forest and Range Habitat for Nongame Birds. U.S. Forest Service General Technical Report WO-1.

Willis, J. 2000. Country Inn Motel, Baggs, WY. Personal communication with George Blankenship, Blankenship Consulting LLC, Denver, CO. June 7, 2000.

Winn, R. D., Hjr., Bishop, M.G., and Gardner, P. S., 1985a. Delta front and deep water basin floor

deposition in North Atlantic interior seaway; Lewis Shale, south-central Wyoming. Earth Science Bulletin, v. 18, p. 65-66.

_____. 1985b. Shallow water and sub storm base deposition of Lewis Shale in Cretaceous Western Interior seaway south-central Wyoming. AAPG Bulletin, v. 71, p. 859-881.

_____. 1985c. Lewis Shale, south central Wyoming; shelf, delta front, and turbidite sedimentation in Wyoming Geological Association Guidebook, 36th Annual Field Conference, p. 113-130.

Wyoming Department of Administration and Information. (WDAI). 2000a Employment by Industry for the United States, Wyoming and Wyoming Counties.

_____. (WDAI). 2000b. Division of Economic Analysis. Sales Tax for Wyoming and Counties by Major Industrial Sector and Use Tax for Wyoming and Counties by Major Industrial Sector. Undated. Cheyenne, WY.

_____. (WDAI) 2000c. October 2000 CREG Severance Taxes.

_____. (WDAI) 2000d. October 2000 Federal Mineral Royalties (Including Coal Leases).

_____. (WDAI) 2001. Population for Counties and Incorporated Places: 1990 and 2000.

Wyoming Department of Employment. 2000. Labor Force, Employment and Unemployment Statistics.

Wyoming Department of Environmental Quality. (WDEQ) - AQD. 1997. Background pollutant information on file at the Wyoming Department of Environmental Quality – Air Quality Division. Cheyenne, Wyoming.

_____. (WDEQ). 2000. *Water Quality Rules and Regulations*.

Wyoming Game and Fish Department. (WGFD). 1999. Annual big game herd unit reports 1998. Wyoming Game and Fish Department, Green River Region, Cheyenne, WY. 436pp.

_____. (WGFD). 2000a. Annual big game herd unit reports 1999. Wyoming Game and Fish Department, Green River Region, Cheyenne, WY. 501pp.

_____. (WGFD). 2000b. Annual report of upland game and furbearer harvest 1999. Wyoming Game and Fish Department. 103pp.

_____. (WGFD). 2000c. Wildlife Observation System. Data base printout, T12-18N:R89-92

Wyoming Natural Diversity Database. (WYNDD). 2000. WYNDD search request results for T12-18N:R89-92W from Rebekah Smith, WYNDD Data and Biological Assistant. Addressed to Dawn Martin, Hayden-Wing Associates, dated February 16, 2000.

REFERENCES CITED

Wyoming Oil and Gas Conservation Commission. (WOGCC). 1995 - 1999. Annual Statistical Summaries 1995, 1996, 1997, 1998. Casper, WY.

Wyoming State Land Use Commission. 1979. Wyoming state land use plan: A program for land use planning in the State of Wyoming. The Wyoming State Land Use Commission, Cheyenne, Wyoming. 180pp + maps.

Wyoming Taxpayers Association (WTA). 2000. Wyoming Property Taxation 2000. December 2000. Cheyenne, WY.

APPENDIX A

INTERIM DRILLING POLICY - DEVELOPMENT AUTHORIZED CONCURRENT WITH EIS PREPARATION FOR THE ATLANTIC RIM COALBED METHANE PROJECT

APPENDIX A

Interim Drilling Policy - Development Authorized Concurrent with EIS Preparation for the Atlantic Rim Coalbed Methane Project

During the preparation of the Atlantic Rim Coalbed Methane EIS, the Bureau of Land Management's (BLM) authority to allow drilling on the federal mineral estate is limited. The Council on Environmental Quality (CEQ) Regulations and 40 CFR 1506.1, *limitations on actions during NEPA process* to comply with the National Environmental Policy Act (NEPA) provide the following regarding limitation on concurrent authorizations:

Section 1506.1

> *(a) Until an agency issues a record of decision as provided in para. 1505.2 (except as provided in paragraph (c) of this section), no action concerning the proposal shall be taken which would:*
>
> > *(1) Have an adverse environmental impact; or*
> > *(2) Limit the choice of reasonable alternatives.*
>
> *(b) If any agency is considering an application from a non-federal entity, and is aware that the applicant is about to take an action within the agency's jurisdiction that would meet either of the criteria in paragraph (a) of this section, then the agency shall promptly notify the applicant that the agency will take appropriate action to insure that the objectives and procedures of NEPA are achieved.*
>
> *(c) While work on a required program environmental impact statement is in progress and the action is not covered by an existing program statement, agencies shall not undertake in the interim any major Federal action covered by the program which may significantly affect the quality of the human environment unless such action:*
>
> > *(1) Is justified independently of the program;*
> > *(2) Is itself accompanied by an adequate environmental impact statement; and*
> > *(3) Will not prejudice the ultimate decision on the program. Interim action prejudices the ultimate decision on the program when it tends to determine subsequent development or limit alternatives.*
>
> *(d) This section does not preclude development by applicants of plans or designs or performance of other work necessary to support an application for Federal, State or local permits or assistance....*

The above regulations and the following criteria and conditions will be used by the BLM to determine new exploratory activities allowed on Federal surface and/or minerals during preparation of the EIS. They also establish conditions under which these activities will be approved. The intent of these criteria and conditions are to keep all activity within the scope of existing analysis and at a reasonable level, to allow limited drilling activity for acquisition of additional data necessary for completion of the EIS, and to prevent unnecessary hardship to leaseholders. These criteria may be modified by the BLM authorized officer (AO) if any of the allowed activities are viewed as having a potentially significant effect on the environment or prejudice the ultimate decision on the drilling program for the EIS as outlined in the CEQ regulations quoted above.

APPENDIX A: INTERIM DRILLING POLICY

Activities Allowed on Federal Lands and Minerals During EIS Preparation

1. A maximum of 200 coalbed methane wells will be allowed within the project area, for research and exploratory purposes, during the interim period in which the EIS is prepared. Wells will only be allowed in the nine pods the operators have proposed and a maximum of only 24 coalbed methane wells will be allowed within any pod, regardless of multiple zones to be evaluated (see map).

2. Activities within individual pods will be authorized by BLM. For any pod location which overlaps the boundary of a sensitive resource area for sage grouse, mountain plover, raptors, big game migration corridors, and sensitive plants, appropriate stipulations and mitigation will be applied to protect any sensitive resources present (see Term Definitions below). Some sensitive resources such as high density paleontological or cultural resources sites, are not mapped and will also be handled on a pod basis.

3. Existing coalbed methane wells (two wells re-completed as coalbed methane producers in the Cow Creek Unit by Double Eagle and one new well completed by Petroleum Development Corporation, to the east of this unit) will count toward the above well limits. As Federal 1691 #10-8 has been plugged and abandoned, it will not count toward the above well limit. In addition, the six coalbed methane wells originally permitted by North Finn LLC and drilled in Section 5, T17N, R90W, and the well located in Section 36, T15 N, R91W, will not count toward the allowed well number, as long as they are not included as part of any proposed pod. In addition, required injection wells and monitoring wells will not count toward the well limit.

4. Any modifications proposed to the approved pods (i.e. changing pod locations, drilling wells outside of the current pod locations, or increasing the total number of wells allowed during interim drilling), will only be approved if geologic, hydrologic, or reservoir characteristics support a change. These changes will be allowed after review by, and concurrence of, the Reservoir Management Group and authorization by the BLM, Rawlins Field Office. Additional federal drainage protection wells may be required.

5. During preparation of the EIS, coalbed methane wells and associated roads and pipelines on any private surface/private mineral where the operator has, or has obtained legal access (i.e., county roads, approved BLM ROW grant or private access road) prior to approval of the interim drilling plan, may be developed as deemed appropriate by the operator/lessee. However, these wells will count toward the total number of wells allowed to be drilled under this interim drilling policy.

Criteria and Conditions that Apply to Interim Drilling Operations

1. A detailed Plan of Development/Surface Use Plan (POD/SUP) and Master Drilling Plan for each individual pod, using guidance provided by the BLM Rawlins Field Office, will be submitted and approved prior to surface disturbing activities.

2. The operator(s) agree to supply the geologic, coal, and water data information discussed in Appendix C of this document.

3. Prior to initiating interim drilling, an environmental assessment (EA), including a detailed Water Management Plan will be prepared and approved for each individual pod. Because

of the current BLM workload, and in order to expedite the completion of the EAs, it is recommended that these documents be prepared by a third-party contractor.

4. All pod EA's will be submitted to the BLM in pdf format and each document will be placed on the BLM Wyoming web page. A 30-day public review of each document will occur from the date the document is placed on the site. BLM will be responsible for writing the Decision Record for each EA.

5. A 1/4 mile buffer is required between surface disturbing activities and the Overland Trail.

6. Block surveys for cultural resources will be required for each pod.

7. No interim drilling will be allowed in the Sand Hills Area of Critical Environmental Concern as described in the Great Divide Resource Management Plan Record of Decision (RMP-1990).

8. The Great Divide RMP states the BLM will include intensive land-use practices to mitigate salt and sediment loading caused by surface disturbing activities within the Muddy Creek watershed. The Muddy Creek Coordinated Resource Management (CRM) group was established as an advisory group to address this issue. Because this area overlaps with the Muddy Creek CRM effort, and since road use contributes the most in increasing the amount of sediment in the Muddy Creek drainage, the POD/SUP will be reviewed by the Muddy Creek CRM Road Committee and recommendations of the group will be considered by BLM. Changes to the POD/SUP will be made prior to initiating work on the pod EA.

9. Surface discharge as a method of disposal for produced coalbed methane waters will be considered for each individual pod during interim drilling activities within the Great Divide Basin. This is subject to the approval of the Water Management Plan and upon obtaining all required federal, state and local permits.

10. Prior to completion of the EIS, water produced from coalbed methane wells located in the Colorado River Basin will be disposed of by re-injection. The only exception to this would be waters produced from the Double Eagle's coalbed methane existing and proposed wells located in the Cow Creek POD. Double Eagle has applied to the Wyoming Department of Environmental Quality (WDEQ) for a National Pollutant Discharge Elimination System (NPDES) permit for their two existing wells and four wells permitted recently by BLM. Should Double Eagle receive their state permit, they will be allowed to surface discharge from these six wells. Prior to any additional drilling of CBM wells by Double Eagle in the Cow Creek Pod, an environmental assessment, including a Water Management Plan, will be prepared and submitted to BLM which will examine the environmental impacts from these wells. Double Eagle will be allowed to dispose of produced CBM waters to the surface only after completion of the environmental analysis and a determination is made that the additional surface discharge will cause no significant impact to the environment.

11. No drilling activities will be allowed in prairie dog towns during interim operations. However, drilling will be allowed in each individual pod containing prairie dog towns upon the completion of black-footed ferrets survey using methods approved by the United States Fish and Wildlife Service. These surveys will clear the pod for a one year period. The operators also have the option of completing surveys in the whole EIS area which would clear the area for the life of the project.

In the event a black-footed ferret or its sign is found, the BLM Authorized Officer shall stop all action on the application in hand, and/or action on any application that may directly, indirectly, or cumulatively affect the colony/complex, and initiate Section 7 review with the USFWS. No project related activities will be allowed to proceed until the USFWS issues their biological opinion. The USFWS biological opinion will specify when and under what conditions and/or prudent measures the action could proceed or whether the action will be allowed to proceed at all.

12. No drilling or disturbance will be allowed in those areas determined to be critical winter habitat for sage grouse.

13. No drilling or disturbance will be allowed in areas where any two or more big game (elk, deer, or antelope) crucial winter ranges overlap.

14. The operators will be required to submit a drilling schedule as part of the Master Drilling Plan. This schedule will be reviewed, and approved by BLM, to ensure that activities are limited within proven big game migration corridors at critical use times during the year.

15. Pipelines, power lines, waterlines, fiber optic lines will be buried and, where possible, will follow the road rights-of-way.

16. Fish passage structures will be installed for roads which cross drainages with fisheries concerns as identified by BLM.

Term/Definitions

SENSITIVE RESOURCE AREAS are defined as those areas containing stabilized sand dunes, sensitive plant areas, raptor nesting concentration areas, prairie dog towns, two-mile buffer around sage grouse leks, mountain plover aggregation areas or potential habitat, big game migration corridors and crucial big game winter ranges, and areas with high density cultural or paleontological resource sites. Field inspections by the BLM will be conducted to verify presence of these resource values and potential impacts prior to considering authorization of any proposed development activity on Federal surface and/or minerals.

WILL BE AUTHORIZED means BLM will authorize the action if, following the environmental review of the APD or ROW application, sensitive resource areas are protected with appropriate stipulations or mitigation and the criteria established under CEQ regulation 40 CFR 1506.1 have been met. An environmental assessment (EA) will be completed for each individual pod prior to authorizing the proposal. Consultation and Coordination with the Wyoming Game and Fish Department and the U.S. Fish and Wildlife Service will occur when applicable for proposed activity within sensitive resource areas. The pod EA will identify the most environmentally acceptable access route, well site, and pipeline location. Mitigation measures developed from nearby project EISs and EAs for protection of resource values may be considered in the assessment. Any action proposed must be in conformance with the Great Divide Resource Management Plan (RMP) and mineral lease terms and conditions.

A coalbed methane pod may consist of two or more production wells, injection wells, access roads, product pipelines, water pipelines, power lines and other ancillary facilities designed specifically to assess the development potential of the play.

APPENDIX B

FEDERAL, STATE, AND COUNTY PERMITS, APPROVALS, AND AUTHORIZING ACTIONS

APPENDIX B

Table B-1. Federal, State, and County Permits, Approvals, and Authorizing Actions.

AGENCY	NATURE OF ACTION
DEPARTMENT OF INTERIOR	
Bureau of Land Management (Rawlins Field Office) (Casper District - Reservoir Management Group)	Approves Applications for Permit to Drill (APDs), Sundry Notices and Reports on Wells (sundry notices), production facilities, disposal of produced water, gas venting or flaring, and well plugging and abandonment for federal wells. Approval to dispose of produced water on BLM-managed lands. Grant ROWs to Operators for gas field development actions on BLM surface outside of federal lease or unit boundaries and to third party applicants (i.e., non-unit operator or non-lease holder) both within and outside of the unit boundary. Reviews inventories of, and impacts to cultural resources affected by undertakings, and consults with SHPO and ACHP. Review impacts on federally listed or proposed for listing threatened or endangered species of fish, wildlife, and plants, and consult with U.S. Fish and Wildlife Service. Grants Unit Area Agreement and subsequent actions relative to the unit. Administers drainage protection and protection of correlative rights on federal mineral estate.
U.S. Fish and Wildlife Service	Reviews impacts on federally listed, or proposed for listing, threatened or endangered species of fish, wildlife, and plants. Migratory bird impact coordination.
DEPARTMENT OF THE ARMY	
U.S. Army Corps of Engineers	Issues (Section 404) permit(s) for placement of dredged or fill material in or excavation of waters of the U. S. and their adjacent wetlands.

APPENDIX B - AUTHORIZING ACTIONS

AGENCY	NATURE OF ACTION
WYOMING DEPARTMENT OF ENVIRONMENTAL QUALITY	
Water Quality Division	Administers Storm Water Pollution Prevention Plan. Approves Surface Discharge. Issue NPDES permits for discharging produced water and storm water runoff. Approves wastewater and sewage disposal. Permits to construct settling ponds an wastewater systems, including ground water injection and disposal wells. Administrative approval for discharge of hydrostatic test water.
Air Quality Division	Permits to construct and permits to operate.
Land Quality Division	Mine permits, impoundments, and drill hole plugging on state lands.
Solid Waste Division	Construction fill permits and industrial waste facility permits for solid waste disposal during construction and operations.
WYOMING STATE ENGINEER'S OFFICE	
	Issues permits to appropriate groundwater and surface water. Issues temporary water rights for construction permits to appropriate surface water.
WYOMING STATE HISTORIC PRESERVATION OFFICE	
	Provides consultation concerning inventory of, and impacts to, cultural resources. Programmatic agreements, consultation.

APPENDIX B - AUTHORIZING ACTIONS

AGENCY	NATURE OF ACTION
WYOMING DEPARTMENT OF TRANSPORTATION	
	Permits for oversize, overlength, and overweight loads. Access permits to state highways
CARBON COUNTY	
	Grants small wastewater system permits, where applicable. Issues driveway access permits where new roads intersect with county roads. Prepares road use agreements and/or oversize trip permits when traffic on county road exceeds established size and weight limits or where the potential for excessive road damage exists. Issues construction and conditional use permits for all new structures. Administers zoning changes where applicable.

AGENCY	NATURE OF ACTION
WYOMING OIL AND GAS CONSERVATION COMMISSION	
	Acts as primary authority for drilling on state and privately held mineral resources, and secondary authority for drilling on federal lands. Holds authority to allow or prohibit flaring or venting of gas on private or state owned minerals. Regulates drilling and plugging of wells on private or state owned minerals. Issues Aquifer Exemption Permit Approves directional drilling. Administers rules and regulations governing drilling units. Grants gas injection well permits. Administers drainage protection and protection of correlative rights on private/state mineral estate.

APPENDIX B

Table B-1. Federal, State, and County Permits, Approvals, and Authorizing Actions.

AGENCY	NATURE OF ACTION
DEPARTMENT OF INTERIOR	
Bureau of Land Management (Rawlins Field Office) (Casper District - Reservoir Management Group)	Approves Applications for Permit to Drill (APDs), Sundry Notices and Reports on Wells (sundry notices), production facilities, disposal of produced water, gas venting or flaring, and well plugging and abandonment for federal wells. Approval to dispose of produced water on BLM-managed lands. Grant ROWs to Operators for gas field development actions on BLM surface outside of federal lease or unit boundaries and to third party applicants (i.e., non-unit operator or non-lease holder) both within and outside of the unit boundary. Reviews inventories of, and impacts to cultural resources affected by undertakings, and consults with SHPO and ACHP. Review impacts on federally listed or proposed for listing threatened or endangered species of fish, wildlife, and plants, and consult with U.S. Fish and Wildlife Service. Grants Unit Area Agreement and subsequent actions relative to the unit. Administers drainage protection and protection of correlative rights on federal mineral estate.
U.S. Fish and Wildlife Service	Reviews impacts on federally listed, or proposed for listing, threatened or endangered species of fish, wildlife, and plants. Migratory bird impact coordination.
DEPARTMENT OF THE ARMY	
U.S. Army Corps of Engineers	Issues (Section 404) permit(s) for placement of dredged or fill material in or excavation of waters of the U. S. and their adjacent wetlands.

APPENDIX B - AUTHORIZING ACTIONS

AGENCY	NATURE OF ACTION
WYOMING DEPARTMENT OF ENVIRONMENTAL QUALITY	
Water Quality Division	Administers Storm Water Pollution Prevention Plan. Approves Surface Discharge. Issue NPDES permits for discharging produced water and storm water runoff. Approves wastewater and sewage disposal. Permits to construct settling ponds an wastewater systems, including ground water injection and disposal wells. Administrative approval for discharge of hydrostatic test water.
Air Quality Division	Permits to construct and permits to operate.
Land Quality Division	Mine permits, impoundments, and drill hole plugging on state lands.
Solid Waste Division	Construction fill permits and industrial waste facility permits for solid waste disposal during construction and operations.
WYOMING STATE ENGINEER'S OFFICE	
	Issues permits to appropriate groundwater and surface water. Issues temporary water rights for construction permits to appropriate surface water.
WYOMING STATE HISTORIC PRESERVATION OFFICE	
	Provides consultation concerning inventory of, and impacts to, cultural resources. Programmatic agreements, consultation.

APPENDIX B - AUTHORIZING ACTIONS

AGENCY	NATURE OF ACTION
WYOMING DEPARTMENT OF TRANSPORTATION	
	Permits for oversize, overlength, and overweight loads. Access permits to state highways
CARBON COUNTY	
	Grants small wastewater system permits, where applicable. Issues driveway access permits where new roads intersect with county roads. Prepares road use agreements and/or oversize trip permits when traffic on county road exceeds established size and weight limits or where the potential for excessive road damage exists. Issues construction and conditional use permits for all new structures. Administers zoning changes where applicable.

AGENCY	NATURE OF ACTION
WYOMING OIL AND GAS CONSERVATION COMMISSION	
	Acts as primary authority for drilling on state and privately held mineral resources, and secondary authority for drilling on federal lands. Holds authority to allow or prohibit flaring or venting of gas on private or state owned minerals. Regulates drilling and plugging of wells on private or state owned minerals. Issues Aquifer Exemption Permit Approves directional drilling. Administers rules and regulations governing drilling units. Grants gas injection well permits. Administers drainage protection and protection of correlative rights on private/state mineral estate.

APPENDIX C

C-1: MASTER SURFACE USE PLAN

C-2: MASTER DRILLING PROGRAM

C-3: MASTER DRILLING PROGRAM

C-4: WATER MANAGEMENT PLAN

APPENDIX C-1

MASTER SURFACE USE PLAN

Petroleum Development Corporation (PEDCO)

Sun Dog Pod
Carbon County, Wyoming

Plan of Development - Interim Coalbed Methane Wells

The Petroleum Development Corporation (PEDCO) Sun Dog Interim Development Coalbed Methane Project is located in Carbon County, Wyoming. The Sun Dog Pod is one of nine pods that comprise the Atlantic Rim Coalbed Methane Interim Drilling Project.

Access to the Sun Dog Pod is by State Highway 789 north from Baggs, Wyoming for approximately 22 miles to its intersection with Carbon County Road 608 (Dad Road). The distance from State Highway 789 to the proposed pod is approximately 6 miles. The total Sun Dog Pod interim development proposal consists of +/- 10 wells with attendant developments and facilities as shown on the Sun Dog Project Plan Overview (attached). This Plan Of Development will address 6 of the +/- 10 planned interim development wells in the Sun Dog Pod. These 6 wells, identified below, are coalbed methane exploration/development wells. The proposed well sites are staked. The remaining 4 coalbed methane wells and one injection well, all located in T16N,R91W Sec.8:S2, were previously addressed under the Dry Cow Creek Pod Master Surface Use Plan.

The following wells and corresponding leases are located within the Sun Dog Pod Interim Development Project Area.

Well Name	Federal Lease No.	Location
Sun Dog Pod Interim Wells		
Federal 1691-2-17	WYW-126439	Sec. 17, T16N, R91W
Federal 1691-6-17	WYW-126439	Sec. 17, T16N, R91W
Federal 1691-8-17	WYW-126439	Sec. 17, T16N, R91W
Federal 1691-10-17	WYW-131778	Sec. 17, T16N, R91W
Federal 1691-14-17	WYW-131778	Sec. 17, T16N, R91W
Federal 1691-16-17	WYW-131778	Sec. 17, T16N, R91W

Lease WYW-126439 contains a special timing stipulation that affects raptor and/or sage and sharp-tailed grouse nesting habitat. This stipulation provides that drilling and surface disturbing activity will not be allowed during the period from February 1 to July 31 within certain areas of the lease.

Lease WYW-131778 contains special timing stipulations that affect big game crucial winter range and sage grouse and raptor nesting habitat as mapped on the Great Divide RMP Wildlife Distribution Overlays. The period from February 1 to July 31 is affected by sage grouse and raptor nesting and the period from November 15 to April 30 is affected by big game crucial winter range.

APPENDIX C-1: MASTER SURFACE USE PLAN

All well sites are located on lands administered by the Bureau of Land Management (BLM) Rawlins Field Office.

The primary targeted reservoir in the Sun Dog Area is coalbed methane from the coal seams within the Mesaverde Group. Drill site locations will be on approved 80-acre spacing. All unproductive wells will be plugged and abandoned as soon as practical after the conclusion of production testing. Productive wells may be shut-in temporarily for gas pipeline connections and/or Sundry Notices by the BLM for production activities and facilities.

The Master Surface Use Program shall serve as right-of-way application for water lines, gas lines, electrical lines, access roads to well locations, compressor station, water injection wells, and water transfer facilities.

1) EXISTING ROADS

Access to the Sun Dog pod is provided by by State Highway 789 south from Interstate 80 (I-80) from Creston Junction to the intersection with Carbon County Road 608 (Dad Road), or north from Baggs, Wyoming for approximately 22 miles to its intersection with Carbon County Road 608. The distance from State Highway 789 to the proposed pod and the interim exploration and production wells is approximately 6 miles as shown on the attached Sun Dog Project Plan Overview.

The existing roads will be maintained in the same or better condition as existed prior to the start of operations. Maintenance of existing roads used to access the drill locations will continue until final abandonment and reclamation of the well locations occurs. Roads will not be flat bladed. Excessive rutting or other surface disturbance will be avoided. Operations will be suspended temporarily during adverse weather conditions if excessive rutting is occurring when access routes are wet, soft, or partially frozen.

Refer to the area and topographic maps in the individual well Application for Permit to Drill (APD) for the location of the well, access route, and for the location of existing roads nearby.

2) PROPOSED ACCESS ROADS

Well Access

Access to the individual well sites will be provided by crowned and ditched roads surfaced with a gravel material acceptable to the BLM. The access roads will follow existing terrain and the travelway will be approximately 14 feet wide. All equipment and vehicles will be confined to this travel corridor and other areas specific in the plan of development. All disturbances related to the access routes will be confined within the travel corridor.

Drainage crossings on the access routes within the project area would either be low water crossings or crossings using culverts. Low water crossings would be utilized in shallow channel crossings and at crossings of the main channel. Crossings of the main channel would consist of excavating an area approximately four feet deep under the travelway and filling it with rock and gravel to the level of the drainage bottom. Channel banks on either side of such crossings would be cut down to reduce grade where necessary. Culverts would be installed on smaller, steeper channel crossings. Topsoil would be saved before channel crossing construction occurs. Also, the total area to be disturbed would be flagged on the ground before construction begins.

Where needed, a PEDCO representative will conduct a "Plans in Hand" review with contractors to review the access routes to well locations. Where needed, directional markers will be temporarily placed to mark access routes. All markers will be removed as soon as they are no longer needed.

All construction work will be accomplished as specified by the landowner and the BLM. If no specific BLM field survey requirements are provided, the design, field survey and construction requirement for BLM Temporary Roads that are described in BLM 9113 Manual will be followed. Design drawings and templates will be submitted only if specifically required by the BLM.

After wells are completed and equipment is installed, travel to wells generally would be limited to one visit every other day. A light truck or utility vehicle would be used to check on operations, read meters, and provide light service during the life of the project. Well service trips could be rescheduled or postponed during periods of wet weather when vehicle traffic could cause rutting.

Compressor Site and Water Injection Well Access

If wells are productive, crowned and ditched roads will provide access to the compressor site and water injection facilities. These access roads will be surfaced with a gravel material that is acceptable to the BLM.

All construction work will be accomplished as specified by the BLM. If no specific BLM field survey requirements are provided, the design, field survey and construction requirements for BLM Temporary Roads that are described in BLM 9113 Manual will be followed. Design drawings and templates will be submitted only if specifically required by the BLM.

Culverts and other road drainage control structures, such as drainage dips, ditches, or water bars, will be installed at specific locations as specified by the BLM and the landowner. Drainage structures will be designed to pass all naturally occurring mean flows and flows from certain storm events, as specified by the BLM. Where needed, rip-rap will be placed at the outlets of culverts to minimize erosion.

The all-weather roads to the compressor site and water injection facilities will have a travelway approximately 14 feet wide. All equipment and vehicles will be confined to these travel corridors and other areas specified in the plan of development. All disturbances related to these access roads will be confined within the travel corridor.

Refer to the area and topographic maps in the individual well APD for the location of proposed access roads and site specific road information.

3) LOCATION OF EXISTING WELLS

A listing of permitted water wells and their locations, within one mile of the Sun Dog Interim Development CBM Project, is attached. This listing was obtained from the Wyoming State Engineer's Office (WSEO).

Also enclosed is a map showing the locations of disposal, drilling, producing, injection, and abandoned oil and gas wells within one mile of the Sun Dog Interim Development CBM Project.

4) LOCATION OF EXISTING AND/OR PROPOSED FACILITIES IF WELL IS PRODUCTIVE

On the Well Pad

At each drill location, surface disturbance will be kept to a minimum. The areal extent of each drill pad is approximately 200 feet by 200 feet. Each drill pad will be leveled using cut and fill construction techniques where needed. Should drilling result in established commercial production, the wellhead area will require an area of approximately 15 feet by 15 feet. The surface equipment at each well will consist of the wellhead and an insulated wellhead cover. Each productive well is expected to require the installation of an electric pump, which will be used to produce water necessary to lower pressure with the coal seams. The lowered pressure will permit methane to be recovered. See the attached diagram of a typical wellhead configuration in the Master Drilling Plan. If different production facilities are required, a Sundry Notice will be submitted.

At each well site, water encountered or used during drilling will be placed in a temporary working pit. Any water that is encountered during drilling is expected to be of higher quality than natural occurring surface waters. The pit will be monitored to ensure that no overflow or subsequent discharge of these waters occurs.

Typically, wells will be shut-in until pipelines and discharge facilities are authorized and constructed. Working pits will be closed once the contents have dried. Once wells become operational, produced water will be separated from the gas and collected in a buried polyethylene flowline for transportation to an approved produced water disposal location.

The primary objectives are the Deep Creek and/or Cherokee Creek Sandstone. The Deep Creek and/or Cherokee Formations are isolated above and below by competent shale barriers that will prevent the initiation and propagation of fractures through overlying strata to any fresh water zones. Where possible, produced water flowlines and gas flowlines will be co-located with the road. Areas have been identified where it is uneconomical to co-locate water and/or gas lines with the access roads.

The surface equipment at the well will consist of the wellhead and an insulated wellhead cover. See the attached schematic diagram of typical cbm well site. Depending on site specific conditions, the housing will be painted either "Carlsbad Canyon" tan, color 2.5Y 6/2 or Desert Brown, color 10YR 6/3 of the "Standard Environment Colors", unless otherwise specified by the BLM.

Off the Well Pad

The compressor site facility is expected to be constructed within an approximate area of 200’ X 200’. A drawing of a typical compression site is attached. About one-half of the compressor site will be affected by the construction, maintenance, and operation of the facility. The compressor site facility will be of all-weather construction having a thick layer of gravel over the pad site. If feasible, topsoil will be removed and conserved for later reclamation activities.

The compressor site will consist of an insulated header building containing allocation meters for each well and a single sales meter. The header building will also contain a de-hydrator that will remove water from the wet gas stream. If different production facilities are required, plans will be submitted in a Sundry Notice.

Water injection facilities are expected to be constructed within an approximate area of 150' X 150'. A drawing of a typical injection facility is attached. The injection facility will be of all-weather construction having a thick layer of gravel over the pad site. Topsoil will be removed and conserved for later reclamation activities.

Approximately 4 water transfer pumping facilities would be utilized during production operations to transfer produced water from the coal bed methane well(s) to the injection well in areas where elevation differences require supplemental pumping to transfer the produced water. Each pumping station would be constructed within an approximate area of 120' X 120'. An approximate 3' berm would be constructed around the perimeter of the pumping station area to contain any potential spills. Water transfer facilities will be located near proposed areas of disturbance and will not be located within known cultural resource sites or sensitive wildlife areas. Locations of water transfer facilities will be submitted by Sundry Notice.

A typical pumping station would consist of a 400 barrel water tank and a small centrifugal water pump. A small pump house would be constructed immediately outside of the bermed area to house the centrifugal pump.

5) LOCATION & TYPE OF DRILLING WATER SUPPLY

Water for drilling the wells will be provided by a nearby existing coalbed methane well and transported to the drill site by truck. Water volume used in drilling operations is dependent upon the depth of the well and any losses that might occur during drilling.

6) CONSTRUCTION MATERIALS

Gravel and/or rock will be purchased from a local supplier having a permitted source of materials for the area. This material will be used for road construction to access wells, compressor and injection facilities.

7) METHODS FOR HANDLING WASTE DISPOSAL

No hazardous substance as defined by CERCLA will be used in the drilling of the wells and/or construction of the well sites and access roads. Commercial preparations, which may contain hazardous substances, may be used in testing and production operations and will be transported over the ROW and within the project area. These materials, which may contain hazardous substances, will be handled in the appropriate manner to minimize potential for leaks or spills to the environment. No RCRA hazardous wastes will be generated in well drilling or production operations. Exempt reserve pit contents will be buried on-site.

Drilled cuttings and drilling fluids will be deposited in the reserve mud pit. The reserve pit will be fenced around 3 sides during drilling. A sheep tight woven wire will be used on the bottom with 2 strands of barbed wire above it. The fourth side of the reserve pit will be fenced as soon as the rig leaves the location. The pit will be backfilled within 2 to 3 weeks following completion of drilling or when sufficient drying has occurred, and topsoil replaced.

There will be no oil, salt water or other noxious fluids produced during drilling and completion operations.

A portable, self-contained chemical toilet will be provided on location during drilling and completion operations. Upon completion of operations, or as required, the contents of the toilet holding tanks will be disposed of at an authorized sewage treatment and disposal facility. Disposal will be in accordance with the State of Wyoming, Carbon County, and BLM requirements regarding sewage treatment and disposal.

Garbage and non-flammable waste materials will be contained in a portable dumpster or similar unit. Upon completion of operations, or as needed, the accumulated trash will be hauled off-site to an approved sanitary landfill. No trash will be placed in the reserve pit.

Immediately after removal of the drilling rig, all debris and other waste materials not contained will be cleaned up and removed from the well location. No potentially adverse materials or substances will be left on the location.

Any spills of oil, gas, salt water or any other potentially hazardous substance will be reported immediately to the BLM, and other responsible parties, and will be mitigated immediately, as appropriate, through cleanup or removal to an approved disposal site.

8) ANCILLARY FACILITIES

Self-contained travel-type trailers may be used on-site during drilling operations. No facilities other than those described in this surface use plan (SUP) will be constructed to support the operations associated with the wells.

9) WELL SITE LAYOUT

Drilling operations would disturb an area approximately 200 feet by 200 feet at each well site (See the attached drawing). A temporary mud pit 15 feet wide by 10 feet deep by 35 feet long would be excavated at each well and reclaimed after completion operations. Topsoil would be removed and stockpiled prior to excavating the pit as required by BLM. PEDCO estimates the reserve pit would be open from 2 to 3 weeks to allow for evaporation of pit fluids. The pit would be fenced on all sides to prohibit wildlife and livestock from falling into the pit. A sheep tight woven wire will be used on the bottom with 2 strands of barbed wire above. Any open pit containing hazardous material will be covered with netting.

Ditches will be constructed, where necessary, around the well pads to divert water away from the pad.

Water discharged during testing/production will go into the water discharge line and will be transported to the disposal well.

Where needed, cut and fill construction techniques will be used to level the drill pads. All surface disturbance related to drilling will be confined to each drill site.

Plans for removal and storage of topsoil are presented in Item 10 below.

All equipment and vehicles will be confined to the access road, pad and area specified in the individual APD's.

10) PLANS FOR RECLAMATION OF THE SURFACE

Well Site and Newly Constructed Access Road

Prior to reserve mud pit excavation, the top 6-8 inches (more if available) of soil and associated vegetative material will be removed and stockpiled. The reserve pit will be allowed to dry prior to the commencement of backfilling work. No attempts will be made to backfill the reserve pit until the pit is free of standing water.

Dry Hole - In the event of a dry hole, all equipment and debris will be removed from the location. Any improvements to the access road, such as culverts and gravel, will be removed. The drainages will be restored to their approximate original bank configuration and depth. Topsoil will be replaced over all cut areas. All disturbed areas will be seeded as indicated below.

Seeding - All disturbed areas will be reclaimed by replacing topsoil, grading, and seeding with a mixture agreed upon by the BLM and PEDCO. Seeding would occur during the spring months after ground frost, or in the fall prior to ground frost. Seed would be applied as directed by the surface owner, either drilled, broadcast, or a combination thereof. Mulching may be required to insure seedling establishment.

The seed mix will be planted (subject to approval by the surface owner) with a drill equipped with a depth regulator. The seed mix will be uniformly planted over the disturbed areas. Where drilling is not possible, seed will be broadcast and the area will be raked or chained to cover the seed. Seeding will be repeated until a satisfactory stand is established as determined by the surface owner.

11) SURFACE OWNERSHIP

The surface of the interim development project area is entirely under federal ownership.

12) OTHER INFORMATION

A Class III Cultural Resource Inventory of the proposed drill sites and access roads and other facilities has been completed by Western Archaeological Services. Reports have been filed with the BLM, Rawlins Field Office.

A comprehensive water disposal plan is attached to this Master Surface Use Plan that addresses how produced water will be handled during the testing and production of the CBM wells.

If archaeological, historical or vertebrate fossil materials are discovered during the course of any construction activities, PEDCO will suspend all operations that further disturb such materials and immediately contact the BLM, Rawlins Field Office (307-328-4200). Operations in the area of discovery will not resume until written authorization to proceed has been issued by the BLM Authorized Officer (AO).

PEDCO will be fully responsible for the actions of their subcontractors. A copy of the approved APD and the Conditions of Approval will be on location during drilling and completion operations.

13) CERTIFICATION

I hereby certify that I, or persons under my direct supervision, have inspected the proposed drill site and access route; that I am familiar with the conditions which currently exist; that the statements made in this plan are, to the best of my knowledge, true and correct; and that the work associated with operations proposed herein will be performed by PEDCO and its contractors and subcontractors in conformity with this plan and the terms and conditions under which it is approved. This statement is subject to the provisions of 18 U.S.C. 1001 for the filing of a false statement.

I also certify that PEDCO will comply with the provisions of the law or the regulations governing the Federal or Indian right of reentry to the surface under 43 CFR 3814.

I also certify that PEDCO shall use its best efforts to conduct its approved operations in a manner that avoids adverse effects on any properties which are listed, or may be eligible for listing, in the National Register of Historic Places (NRHP). If historic or archaeological materials are uncovered during construction, the operator will immediately stop work that might further disturb such materials, and contact the AO (or his/her representative) at the BLM Rawlins Field Office. Any paleontological resources or fossils discovered as a result of operations associated with these wells will be brought to the attention of the AO or his/her representative immediately. All activities in the vicinity of such discoveries will be suspended until notified to proceed by the AO.

PEDCO hereby certifies that:

1. All potentially affected landowners having properly permitted water wells with the WSEO within each proposed well's Circle of Influence (one-half mile radius) were offered a Water Well Agreement; and

2. If a Water Well Agreement is not reached with the landowner, PEDCO agrees to mitigate the impacts of its coalbed methane wells in accordance with State of Wyoming water laws; and

3. PEDCO has applied for a Permit to Appropriate Groundwater from the WSEO, concurrently with this APD.

Lessees Representation and Certification - Sun Dog Pod

Mr. Scott Hedlund
Compliance Technician
PEDCO
801 East 4th Street, Suite 23
Gillette, Wyoming 82716
Phone: (307) 682-4088

PEDCO: Date: August 9, 2001

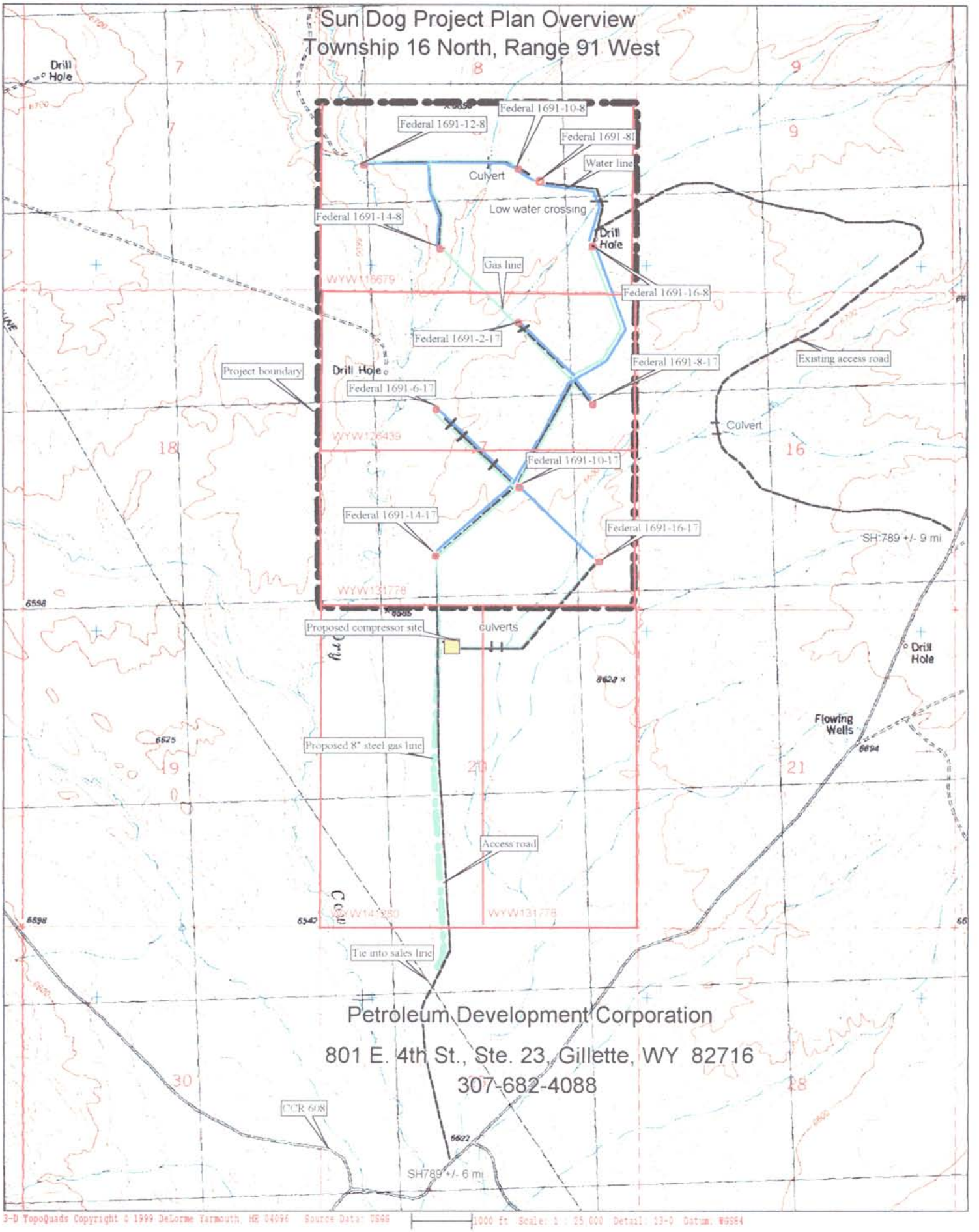
Sun Dog Project Plan Overview
Township 16 North, Range 91 West
Drill Hole
Federal 1691-10-8
Federal 1691-12-8
Federal 1691-8I
Water line
Culvert
Low water crossing
Federal 1691-14-8
Drill Hole
Gas line
WYW116679
Federal 1691-16-8
Federal 1691-2-17
Federal 1691-8-17
Existing access road
Project boundary
Drill Hole
Federal 1691-6-17
Culvert
WYW126439
Federal 1691-10-17
Federal 1691-14-17
Federal 1691-16-17
SH789 +/- 9 mi
WYW131778
Proposed compressor site
culverts
Drill Hole
Flowing Wells
Proposed 8" steel gas line
Access road
WYW131778
Tie into sales line
Petroleum Development Corporation
801 E. 4th St., Ste. 23, Gillette, WY 82716
307-682-4088
CCR 608
SH789 +/- 6 mi
3-D TopoQuads Copyright © 1999 DeLorme Yarmouth, ME 04096 Source Data: USGS
1000 ft Scale: 1 : 25,000 Detail: 13-0 Datum: WGS84

Permitted Water Wells Within One Mile of the Sun Dog Project Area

Permit No.	Twn	Rng	Sec	Qtr/Qtr	Applicant	Facility Name	Use	YldAct	Well Depth	Stat Depth
P56794W	16	91	8	SESE	BLM	Coyote	STO	20	10913	Flowin
P6143P	16	91	21	SWNE	BLM	Dry Cow Well #1	STO	20	8500	Artesian
P6144P	16	91	21	SWNE	BLM	Dry Cow Well #2	STO	20	605	Artesian

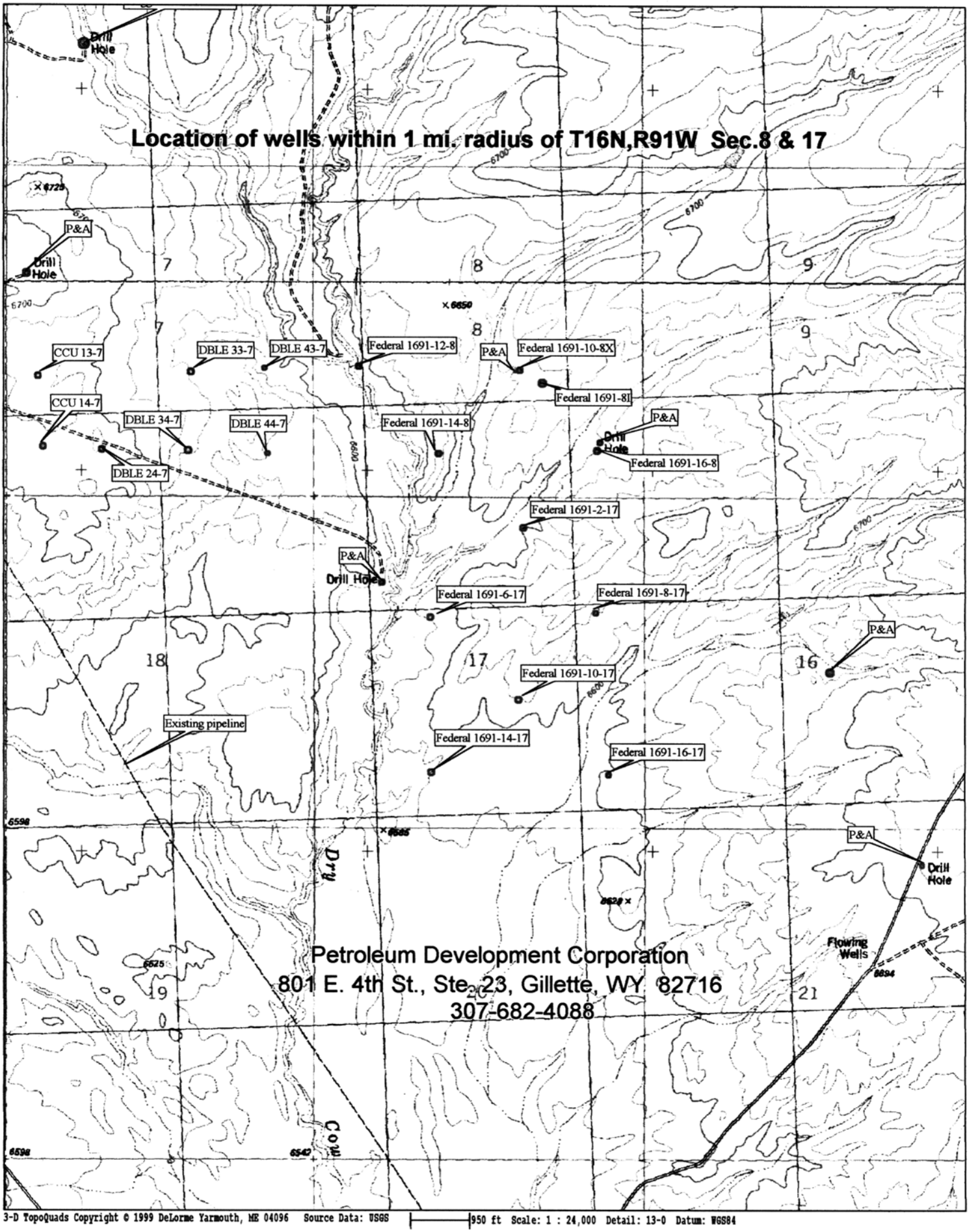

3-D TopoQuads Copyright © 1999 DeLorme Yarmouth, ME 04096 Source Data: USGS 950 ft Scale: 1 : 24,000 Detail: 13-0 Datum: WGS84

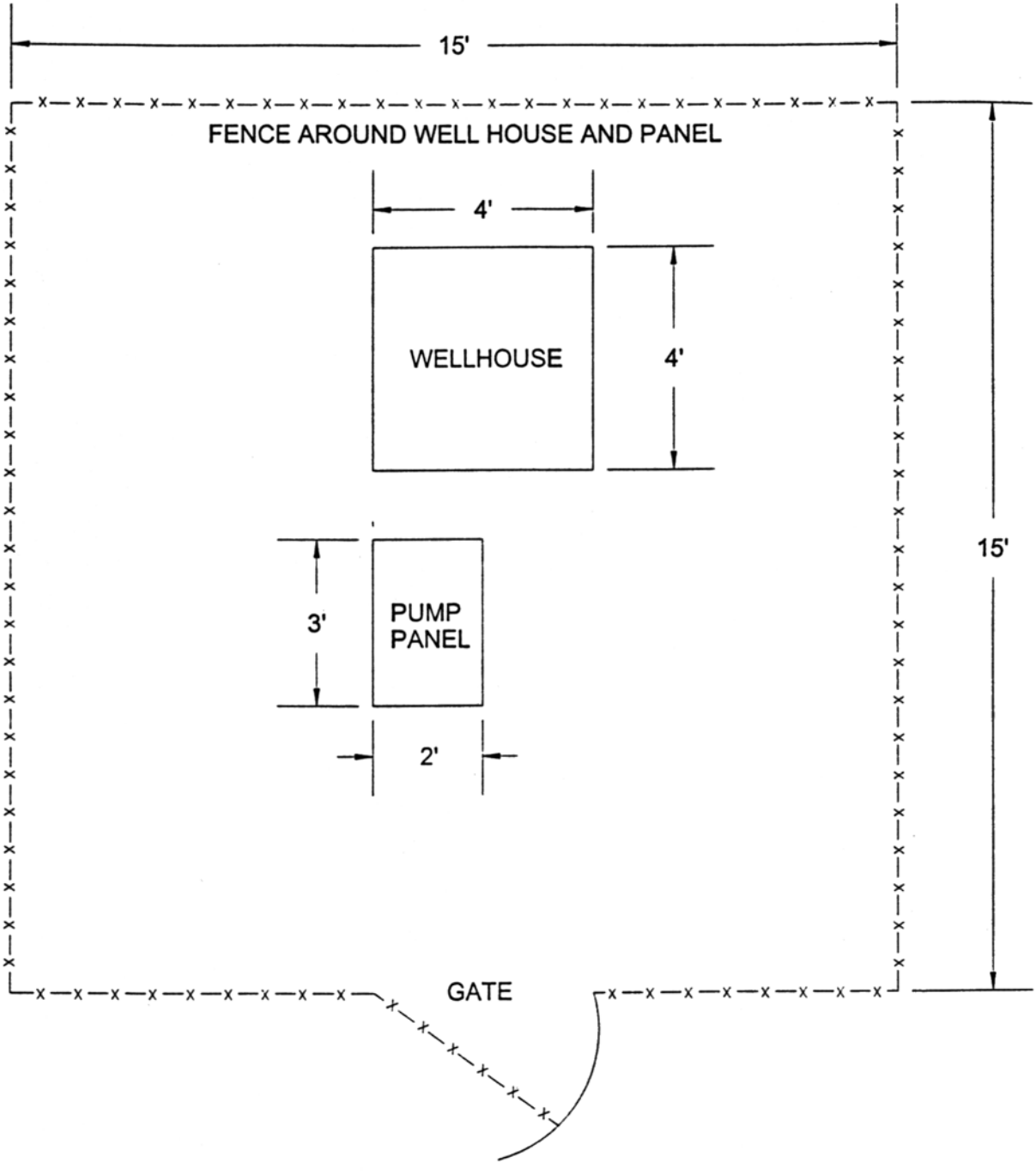

PETROLUEM DEVELOPMENT CORP.

TYPICAL CBM WELL SITE

SCALE: NTS	DATE: 05.04.01	DRAWN BY: MTM	FIGURE: 5

1172/Exhibit A

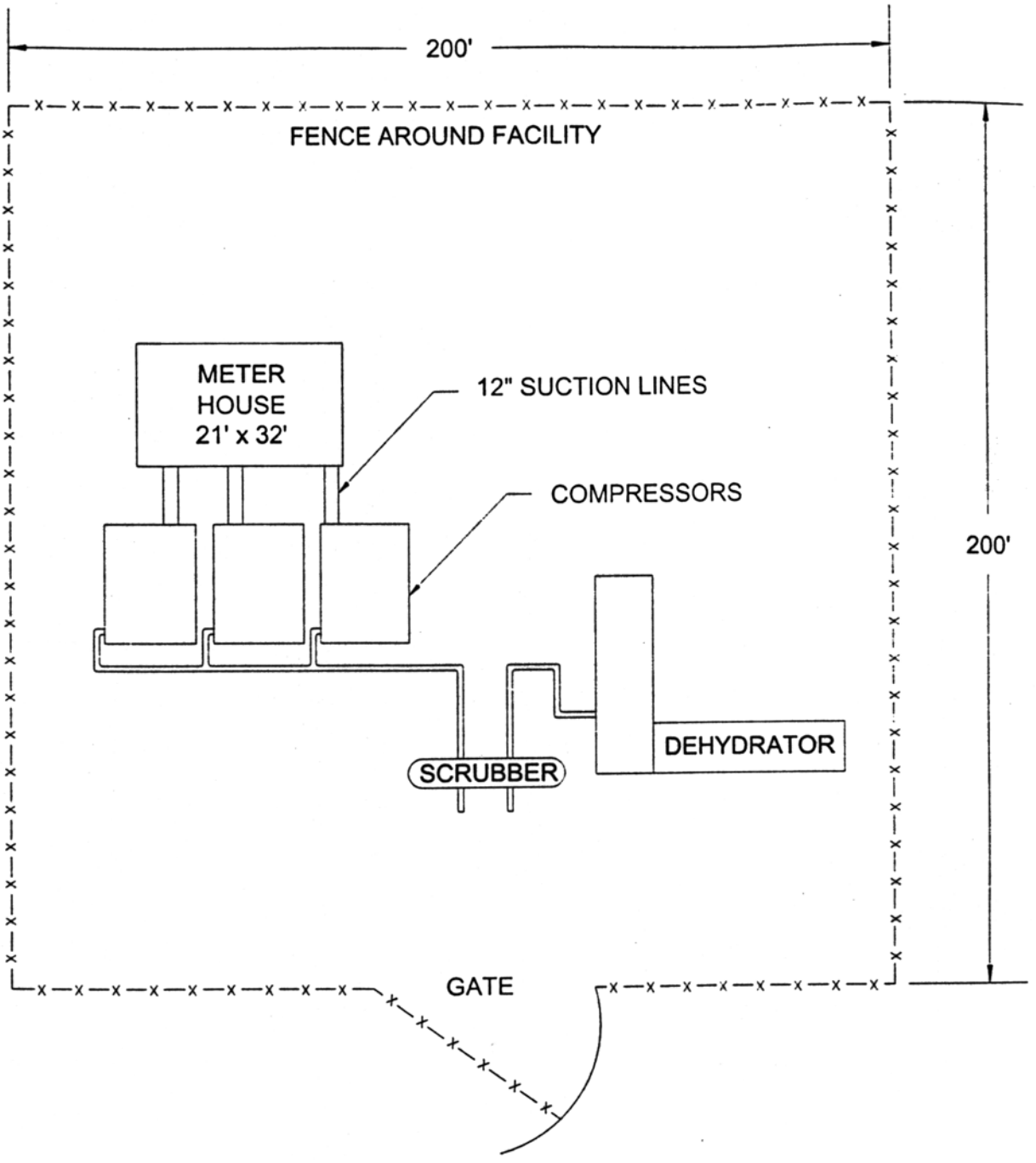

PETROLUEM DEVELOPMENT CORP.

TYPICAL COMPRESSOR STATION & METER FACILITY

SCALE: NTS	DATE: 5.04.01	DRAWN BY: MTM	FIGURE: 10

1172/Exhibit A

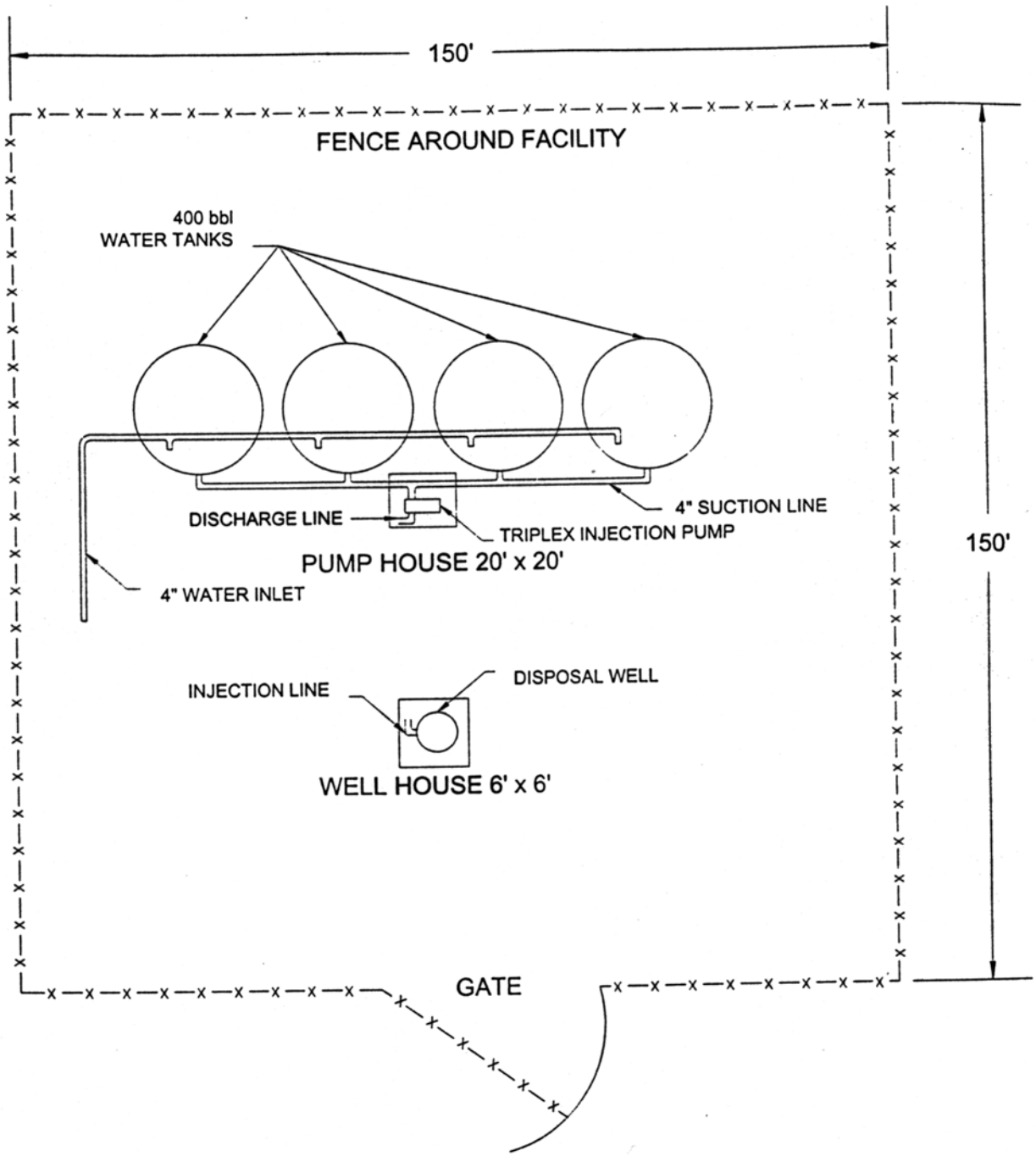

PETROLUEM DEVELOPMENT CORP.

TYPICAL WATER DISPOSAL FACILITY

SCALE: NTS	DATE: 05.04.01	DRAWN BY: MTM	FIGURE: 8

1172/Exhibit A

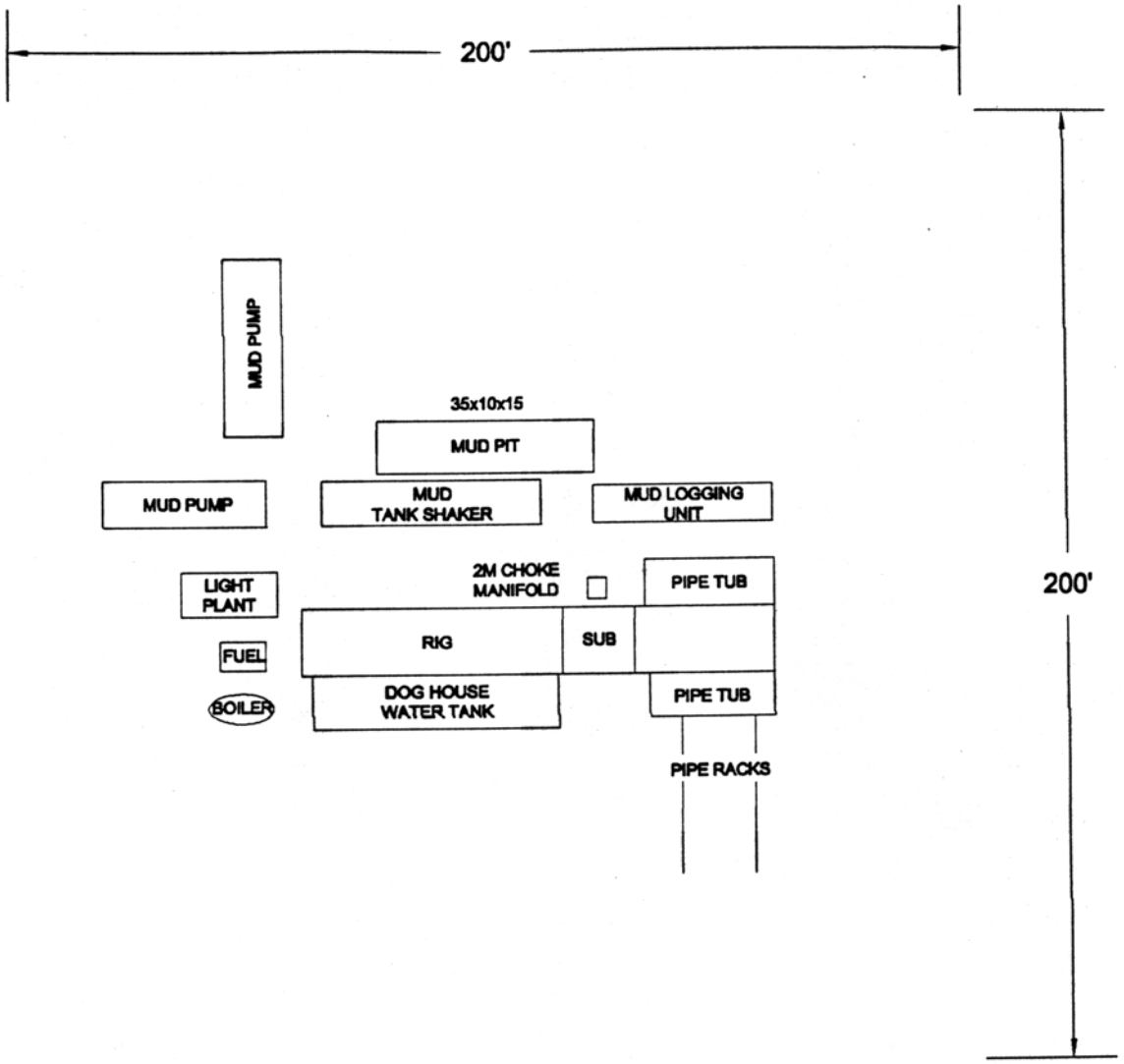

PETROLUEM DEVELOPMENT CORP.

TYPICAL DRILLSITE LAYOUT

SCALE: NTS	DATE: 5.18.01	DRAWN BY: ML	FIGURE: -

1172/Exhibit A

APPENDIX C-2

MASTER DRILLING PROGRAM

OPERATOR: Petroleum Development Corporation (Pedco)
Carbon County, Wyoming
Section 17 T16N, R91W, 6th PM
BLM Leases: WYW126439, WYW131778

Drilling Program for the subject wells listed below:

1. Federal 1691-2-17
2. Federal 1691-6-17
3. Federal 1691-10-17
4. Federal 1691-14-17
5. Federal 1691-16-17

1. AVERAGE ESTIMATED TOPS OF IMPORTANT GEOLOGIC MARKERS:

Formation	Depth
Lewis Shale	Surface
Almond	+/- 586’
Pine Ridge	+/- 881’
Allen Ridge	+/- 1136’
TD	+/- 1600’

2. ESTIMATED DEPTH OF ANTICIPATED WATER, OIL, GAS OR MINERAL FORMATIONS:

Almond	Methane gas
Allen Ridge	Methane gas

The Lewis Shale is not anticipated to contain any zones capable of producing water. There are several zones within the Mesaverde capable of producing fresh water, including the coal seams. Several coal seams may be tested for gas producing formations to total depth. All shallow water zones will be protected with casing and cement. Cement will be brought above the base of the Lewis Shale to isolate all formations in the Mesaverde Group.

Planned Objective: Mesaverde

3. MINIMUM BOP REQUIREMENTS: - refer to attached BOP schematics

1. The BOPE shall be closed whenever the well is unattended.
2. The BOPE shall be pressure tested when initially installed, whenever any seal subject to pressure testing is broken, after repairs, or every 30 days.
3. PEDCO shall notify the Rawlins BLM office 4 hours prior to the BOPE test.

4. SUPPLEMENTARY INFORMATION:

The primary objective of this project is to drill, stimulate, and produce coalbed methane gas from the coal seams of the Mesaverde Formation.

PEDCO proposes to test the Mesaverde coals between 586' and 1600'. Stimulation of the perforated coal seams will be done by hydraulic fracturing. Fresh water, gelled water, and/or foam fracturing techniques will be used.

Please see the attached schematics for **Typical CBM Drill Site Layout**, **Configuration Options, Typical CBM Completed Well**, and **Typical CBM Well Site.**

5. CASING PROGRAM:

Hole Size	Casing Size	Casing Wt.	Grade	Joint	Depth Set	New/Used	Rng
13 1/2"	10 ¾"	32.75#	H-40	ST&C	0-160	New	3
9 7/8"	7"	23#	MC-50	LT&C	0-TD	New	3

Surface Casing:	10 ¾"	32.75 ppf.	H-40	STC	Collapse	Burst	Tension
				Ratings:	880	1820	205M

A. Burst = [0.052 * FG * TVD(shoe)] – [Gas Gradient * TVD]
= [0.052 * 9.3ppg * 160'] – [0.1psi/ft * 160']
= 61.38psi
Safety Factor = Rating/Burst
= 1820/61.38
= 29.65

B. Collapse = 0.052 * MW * TVD(shoe)
= 0.052 * 8.8ppg * 160'
= 73.22psi
Safety Factor = Rating/Collapse
= 880/73.22
= 12.02

C. Tension = Weight * MD * [1 – (MW/65.5ppg)]
= 32.75ppf * 160' * [1 – (8.8ppg/65.5ppg)]
= 4558.8 lbs.
Safety Factor = Rating/Tension
= 205,000/4558.8
= 44.97

Surface casing shall have centralizers on the bottom 3 joints of the casing, starting with the shoe joint.

Production Casing:	7"	23 ppf.	MC-50	STC	Collapse	Burst	Tension
				Ratings:	3110	3960	273M

A. Burst = [0.052 * 8.4ppg * 1600'] – [0.1psi/ft * 1600']
= 538.88psi
Safety Factor = Rating/Burst
= 3960/538.88
= 7.35

B. Collapse = 0.052 * 12.5ppg * 1600'
= 1040psi
Safety Factor = Rating/Collapse
= 3110/1040
= 2.99

C. Tension weight = 23lbs./ft * 1600' * [1 – (12.5ppg/65.5ppg)]
= 23lbs./ft * 1600' * .8092
= 29,778.56 lbs.
Safety Factor = Rating/Tension
= 273,000/29,778.56
= 9.17

6. MUD PROGRAM:

Drilling mud will be used by the circulation medium. A fresh water, polymer, gel drilling mud will be used and visual monitoring will be done from spud to total depth. The anticipated mud weight will be between 8.5 – 13 ppg. Sufficient quantities of lost circulation material and barite will be available at the well site at all times for the purpose of assuring well control.

7. CEMENTING PROGRAM:

The following is the proposed procedure for cementing the 10 ¾" surface pipe and 7" long string:

Surface Casing:

Lead: Class "C" Type III, 14.4 ppg., yield 1.44ft^3/sk @ 101% excess. Compressive strength in 24 hours at 80°F 3100psi.

The surface casing shall be cemented back to surface. In the event cement does not circulate to surface or fall back of the cement column occurs, remedial cementing shall be done to cement the casing back to surface.

Long String:

Lead: Class "C" Type III, 14.4 ppg., yield 1.44ft^3/sk @ 35% excess. Compressive strength in 24 hours at 95°F 3200psi.

Estimated top of cement back to surface.

8. LOGGING PROGRAM:

Cores: Rotary Cores will be taken as needed to evaluate the coal seams.

DST's: None Planned

Logs: Induction, GR, SP, Density, Neutron and Caliper – From surface to TD
Cement Bond Log – From 10 ¾"casing shoe TD
Mud Logger – As Needed.

9. PRESSURE DATA, POTENTIAL HAZARDS:

Bottom hole pressures anticipated @ 1000 – 1100 psi.
There is no history of hydrogen sulfide gas in the area and none is anticipated.

10. ANTICIPATED STARTING DATES AND NOTIFICATION OF OPERATIONS:

A. Anticipated Starting Dates:

Anticipated Commencement Date	- Summer 2001, or upon approval
Drilling Days	- Approximately 7 Days/Per Well
Completion Days	- Approximately 2 Days/Per Well
Testing Days	- Approximately 7-14 Days/Per Well

Note: Drilling operations will commence as soon as practical after approval of all necessary permits including the APD's.

B. Notification of Operations:

Rawlins Field Office, BLM
1300 North Third
Rawlins, Wyoming 82301
(307) 328-4200

NL

SHAFFER HYDRAULIC BLOWOUT PREVENTERS
TYPE E DOUBLE PREVENTERS
(RISING LOCKING SHAFTS)

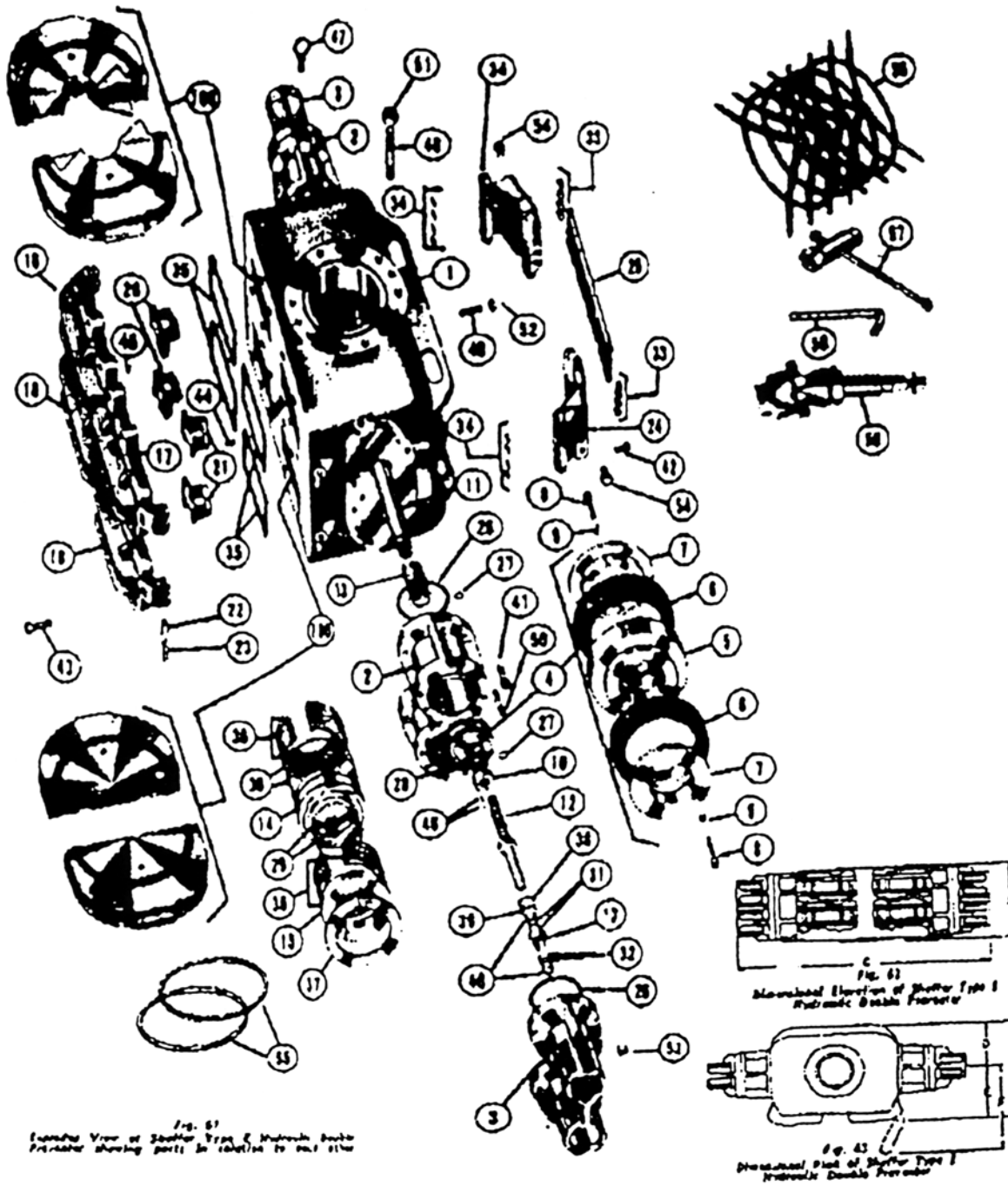

Size	Press. Rat	Test Press	Vertical bore
10"	3,000 psi	6,000 psi	11"

Hieght	width	Length	Close	open
27 1/2"	34 1/4"	80 1/8	3.25 gals	2.7 gals

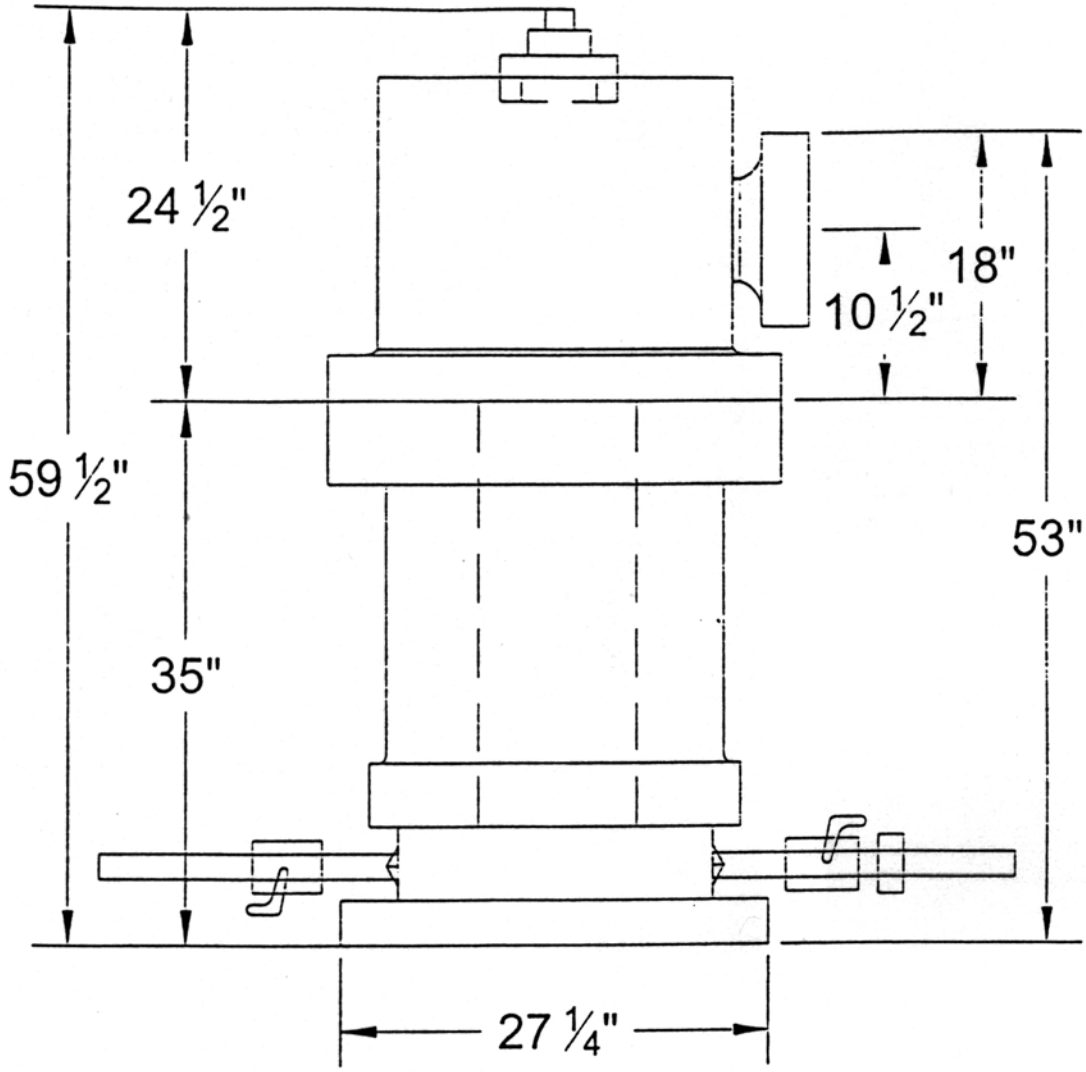

SPECIFICATIONS

10" - 900 FLANGES ON B.O.P.
10" - 900 FLANGE ON ROTATING HEAD
6" - 600 FLANGE ON FLOWLINE
2" - COLLAR ON EACH SIDE OF B.O.P. AT BOTTOM

PETROLUEM DEVELOPMENT CORP.

SCHEMATIC

1500 P.S.I. REAGAN ANNULAR B.O.P.

SCALE: AS NOTED	DATE: 05.04.01	DRAWN BY: MTM	FIGURE: 1

1172/Exhibit A

BOTTOM FLANGE ON ANNULAR B.O.P.

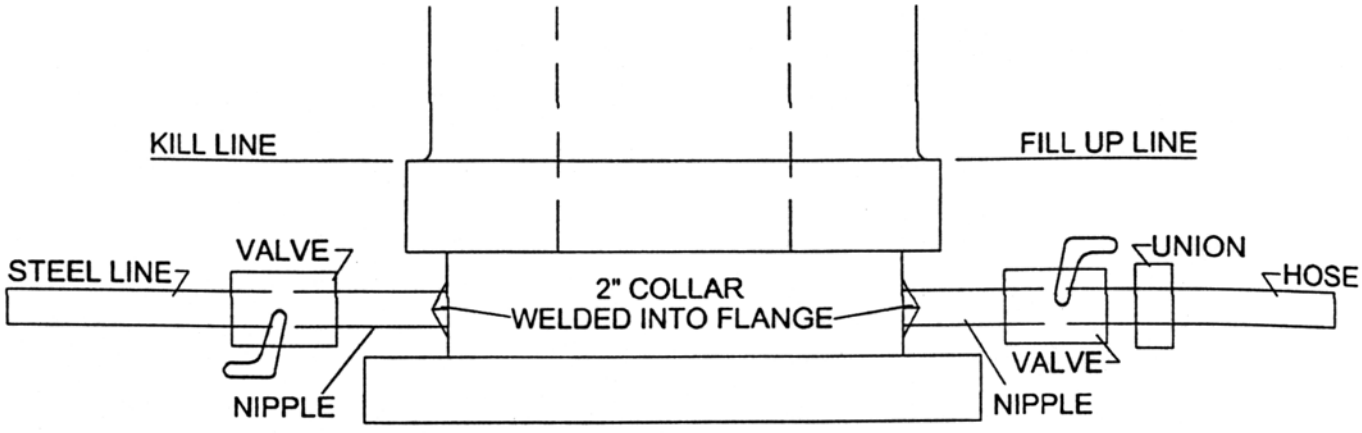

2M CHOKE MANIFOLD EQUIPMENT

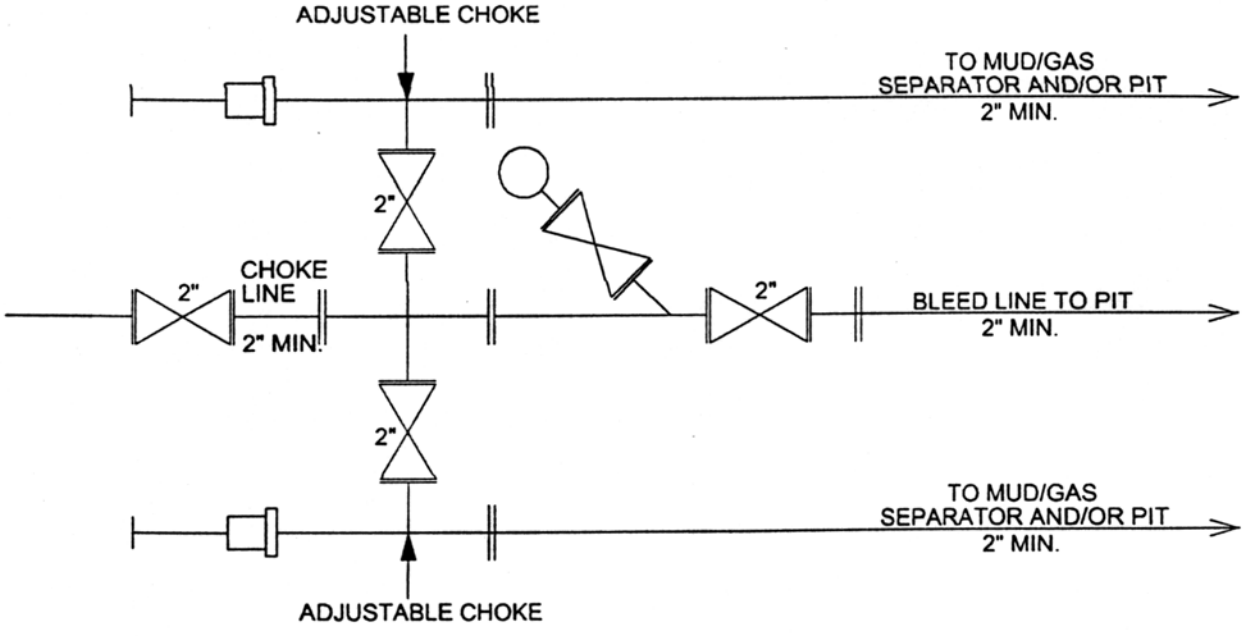

SPECIFICATIONS

10" - 900 FLANGES ON B.O.P.
10" - 900 FLANGES ON ROTATING HEAD
6" - 600 FLANGE ON FLOWLINE
2" - COLLAR ON EACH SIDE OF B.O.P. AT BOTTOM

PETROLUEM DEVELOPMENT CORP.

SCHEMATIC

BOTTOM FLANGE ON ANNULAR B.O.P. &
2M CHOKE MANIFOLD EQUIPMENT

SCALE: as noted	DATE: 05.04.01	DRAWN BY: MTM	FIGURE: 2

1172/Exhibit A

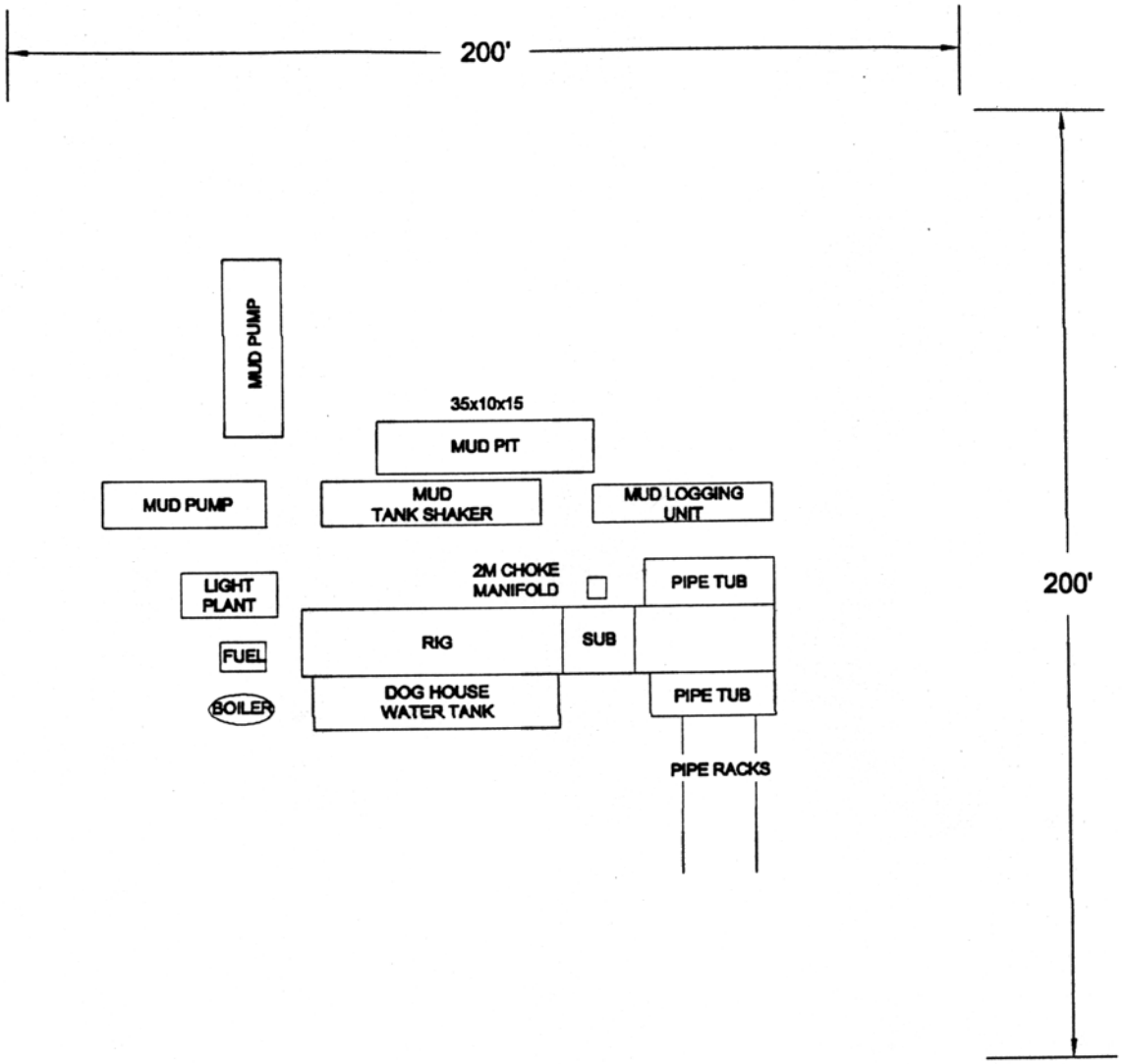

PETROLUEM DEVELOPMENT CORP.

TYPICAL DRILLSITE LAYOUT

SCALE: NTS	DATE: 5.18.01	DRAWN BY: ML	FIGURE: -

1172/Exhibit A

MANDREL STYLE

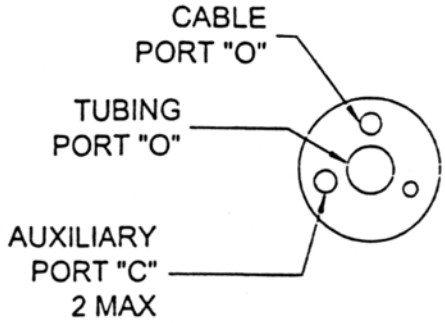

GS-3 / GS-4
CENTERED HANGER
WITH CABLE PORT &
UP TO 2 AUX PORTS

BODY STYLES

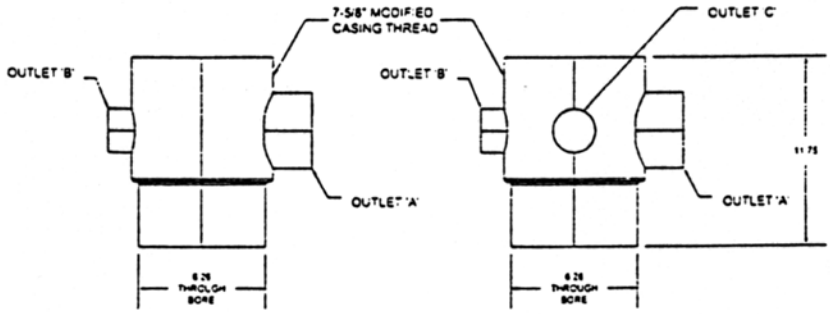

4 x 3 STYLE

4 x 2 STYLE

Standard Body Configurations				
Body Style	Bottom Connection	Outlet "A"	Outlet "B"	Outlet "C"
4 x 2	7" Short Casing (Male or Female)	4' LP Female	2" LP Female	NA
4 x 3	7" Short Casing (Male or Female)	4" LP Female	3" LP Female	NA
4 x 2 x 2	7" Short Casing (Male or Female)	4" LP Female	2" LP Female	2" LP Female

Standard Mandrel Configurations				
Mandrel Style	Port "C"	Port "D"	Port "E"	Approx Wt - LBS
GS-3	2-3/8" UPTBG Box Down X	1" LP	(1) 1/2" LP Box Up	26
GS-4	2-3/8" UPTBG Box Up	Box Up	(2) 1/2" LP Box Up	26

PETROLUEM DEVELOPMENT CORP.

CONFIGURATION OPTIONS

SCALE: NTS	DATE: 05.04.01	DRAWN BY: MTM	FIGURE

1172/Exhibit A

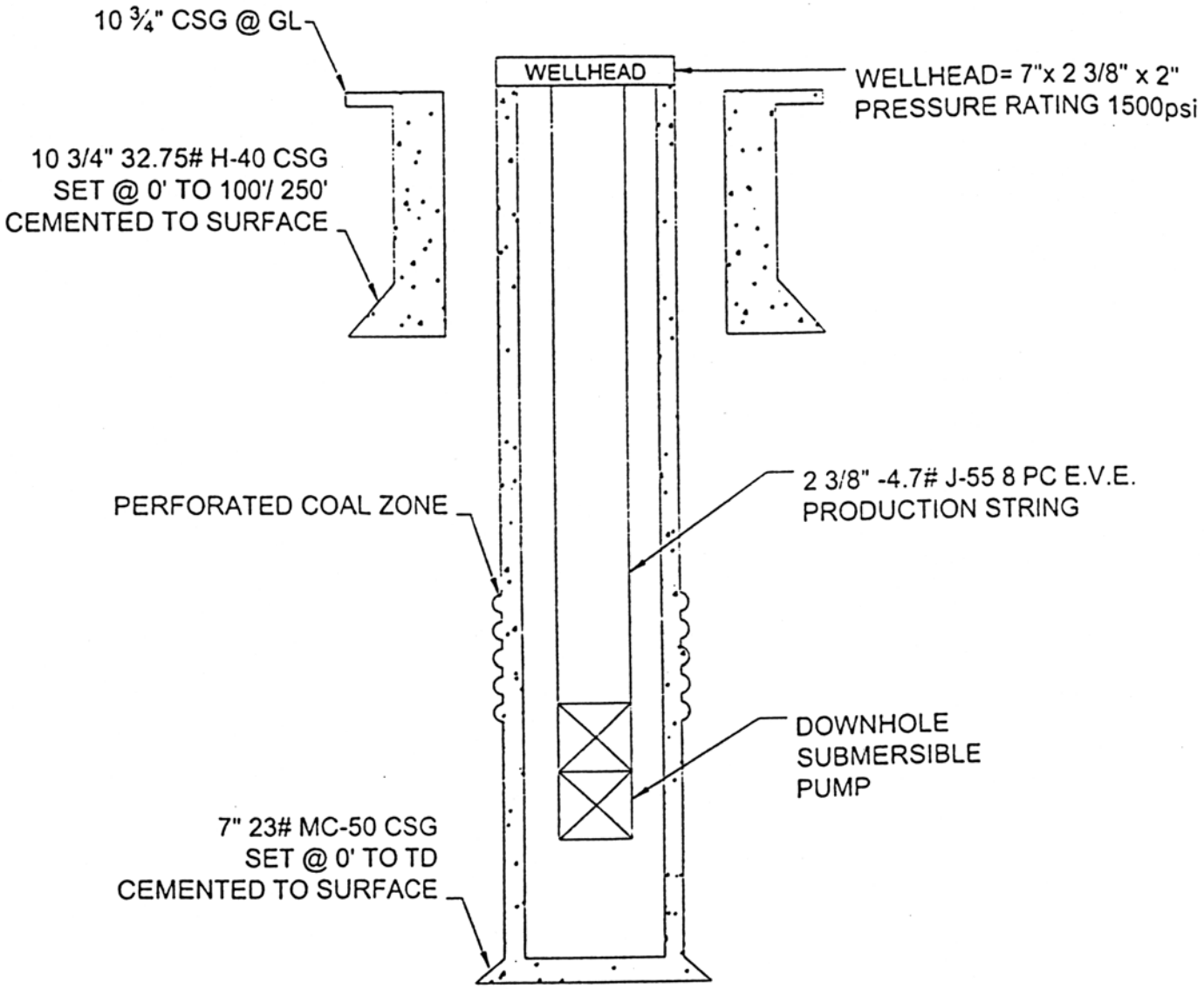

PETROLUEM DEVELOPMENT CORP.

TYPICAL CBM COMPLETED WELL

SCALE: NTS	DATE: 05.04.01	DRAWN BY: MTM	FIGURE: 4

1172/Exhibit A

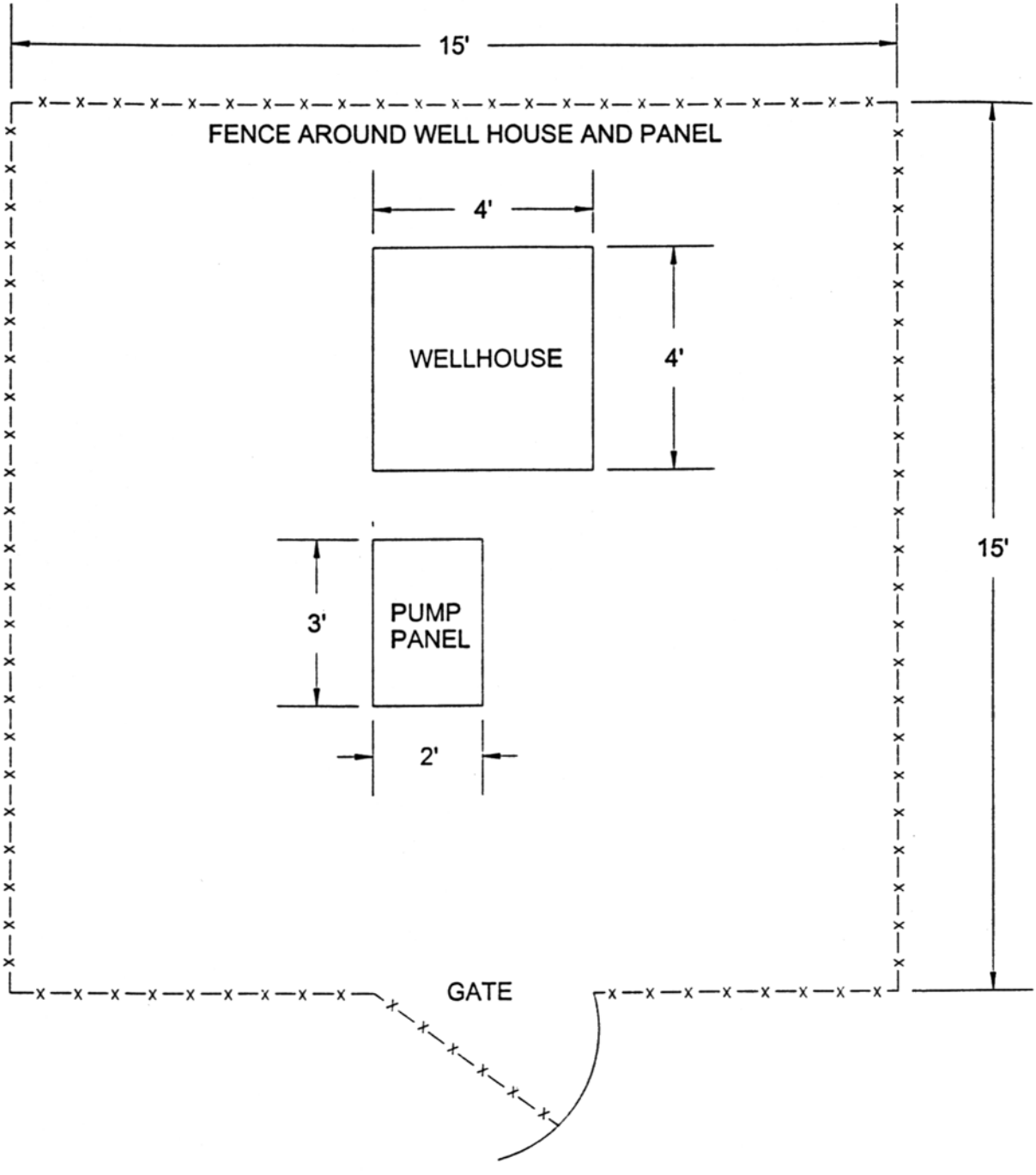

PETROLUEM DEVELOPMENT CORP.

TYPICAL CBM WELL SITE

SCALE: NTS	DATE: 05.04.01	DRAWN BY: MTM	FIGURE: 5

1172/Exhibit A

APPENDIX C-3

MASTER DRILLING PROGRAM

OPERATOR: Petroleum Development Corporation (Pedco)

Carbon County, Wyoming

Sections 8 & 17 T16N, R91W, 6th PM

BLM Leases: WYW116679, WYW126439

Drilling Program for the subject wells listed below:

1. Federal 1691-10-8X
2. Federal 1691-8-17

1. AVERAGE ESTIMATED TOPS OF IMPORTANT GEOLOGIC MARKERS:

Formation	Depth
Lewis Shale	Surface
Almond	+/- 580’
Pine Ridge	+/- 1010’
Allen Ridge	+/- 1174’
TD	+/- 1400’

2. ESTIMATED DEPTH OF ANTICIPATED WATER, OIL, GAS OR MINERAL FORMATIONS:

Almond	Methane gas
Allen Ridge	Methane gas

The Lewis Shale is not anticipated to contain any zones capable of producing water. There are several zones within the Mesaverde capable of producing fresh water, including the coal seams. Several coal seams may be tested for gas producing formations to total depth. All shallow water zones will be protected with casing and cement. Cement will be brought above the base of the Lewis Shale to isolate all formations in the Mesaverde Group.

Planned Objective: Mesaverde

3. MINIMUM BOP REQUIREMENTS: - refer to attached BOP schematics

1. The BOPE shall be closed whenever the well is unattended.
2. The BOPE shall be pressure tested when initially installed, whenever any seal subject to pressure testing is broken, after repairs, or every 30 days.
3. PEDCO shall notify the Rawlins BLM office 4 hours prior to the BOPE test.

4. SUPPLEMENTARY INFORMATION:

The primary objective of this project is to drill, stimulate, and produce coalbed methane gas from the coal seams of the Mesaverde Formation.

PEDCO proposes to test the Mesaverde coals between 580’ and 1400’. Stimulation of the perforated coal seams will be done by hydraulic fracturing. Fresh water, gelled water, and/or foam fracturing techniques will be used.

Please see the attached schematics for **Typical CBM Drill Site Layout**, **Configuration Options, Typical CBM Completed Well**, and **Typical CBM Well Site.**

5. CASING PROGRAM:

Hole Size	Casing Size	Casing Wt.	Grade	Joint	Depth Set	New/Used	Rng
13 1/2”	10 ¾”	32.75#	H-40	ST&C	0-140	New	3
9 7/8”	7”	17#	H-40	LT&C	0-TD	New	3

Surface Casing:	10 ¾”	32.75 ppf.	H-40	STC	Collapse	Burst	Tension
				Ratings:	880	1820	205M

A. Burst = [0.052 * FG * TVD(shoe)] – [Gas Gradient * TVD]
= [0.052 * 9.3ppg * 140’] – [0.1psi/ft * 140’]
= 53.7psi
Safety Factor = Rating/Burst
= 1820/53.7
= 33.89

B. Collapse = 0.052 * MW * TVD(shoe)
= 0.052 * 8.8ppg * 140’
= 64.06psi
Safety Factor = Rating/Collapse
= 880/64.06
= 13.74

C. Tension = Weight * MD * [1 – (MW/65.5ppg)]
= 32.75ppf * 140’ * [1 – (8.8ppg/65.5ppg)]
= 3988.95 lbs.
Safety Factor = Rating/Tension
= 205,000/3988.95
= 51.39

Surface casing shall have centralizers on the bottom 3 joints of the casing, starting with the shoe joint.

Production Casing:	7”	17 ppf.	H-40	STC	Collapse	Burst	Tension
				Ratings:	1450	2310	122M

A. Burst = [0.052 * 8.4ppg * 1400’] – [0.1psi/ft * 1400’]
= 471.52psi
Safety Factor = Rating/Burst
= 2310/471.52
= 4.89

B. Collapse = 0.052 * 12.5ppg * 1400'
= 910psi
Safety Factor = Rating/Collapse
= 1450/910
= 1.59

C. Tension weight = 17lbs./ft * 1400' * [1 – (12.5ppg/65.5ppg)]
= 17lbs./ft * 1400' * .8092
= 19,259 lbs.
Safety Factor = Rating/Tension
= 122,000/19,259
= 6.33

6. MUD PROGRAM:

Drilling mud will be used by the circulation medium. A fresh water, polymer, gel drilling mud will be used and visual monitoring will be done from spud to total depth. The anticipated mud weight will be between 8.5 – 13 ppg. Sufficient quantities of lost circulation material and barite will be available at the well site at all times for the purpose of assuring well control.

7. CEMENTING PROGRAM:

The following is the proposed procedure for cementing the 10 ¾" surface pipe and 7" long string:

Surface Casing:

Lead: Class "C" Type III, 14.4 ppg., yield 1.44ft^3/sk @ 101% excess. Compressive strength in 24 hours at 80°F 3100psi.

The surface casing shall be cemented back to surface. In the event cement does not circulate to surface or fall back of the cement column occurs, remedial cementing shall be done to cement the casing back to surface.

Long String:

Lead: Class "C" Type III, 14.4 ppg., yield 1.44ft^3/sk @ 35% excess. Compressive strength in 24 hours at 95°F 3200psi.

Estimated top of cement back to surface.

8. LOGGING PROGRAM:

Cores: Rotary Cores will be taken as needed to evaluate the coal seams.

DST's: None Planned

Logs: Induction, GR, SP, Density, Neutron and Caliper – From surface to TD
Cement Bond Log – From 10 ¾"casing shoe TD
Mud Logger – As Needed.

9. PRESSURE DATA, POTENTIAL HAZARDS:

Bottom hole pressures anticipated @ 1000 – 1100 psi.
There is no history of hydrogen sulfide gas in the area and none is anticipated.

10. ANTICIPATED STARTING DATES AND NOTIFICATION OF OPERATIONS:

A. Anticipated Starting Dates:

Anticipated Commencement Date	- Summer 2001, or upon approval
Drilling Days	- Approximately 7 Days/Per Well
Completion Days	- Approximately 2 Days/Per Well
Testing Days	- Approximately 7-14 Days/Per Well

Note: Drilling operations will commence as soon as practical after approval of all necessary permits including the APD's.

B. Notification of Operations:

Rawlins Field Office, BLM
1300 North Third
Rawlins, Wyoming 82301
(307) 328-4200

NL

SHAFFER HYDRAULIC BLOWOUT PREVENTERS
TYPE E DOUBLE PREVENTERS
(RISING LOCKING SHAFTS)

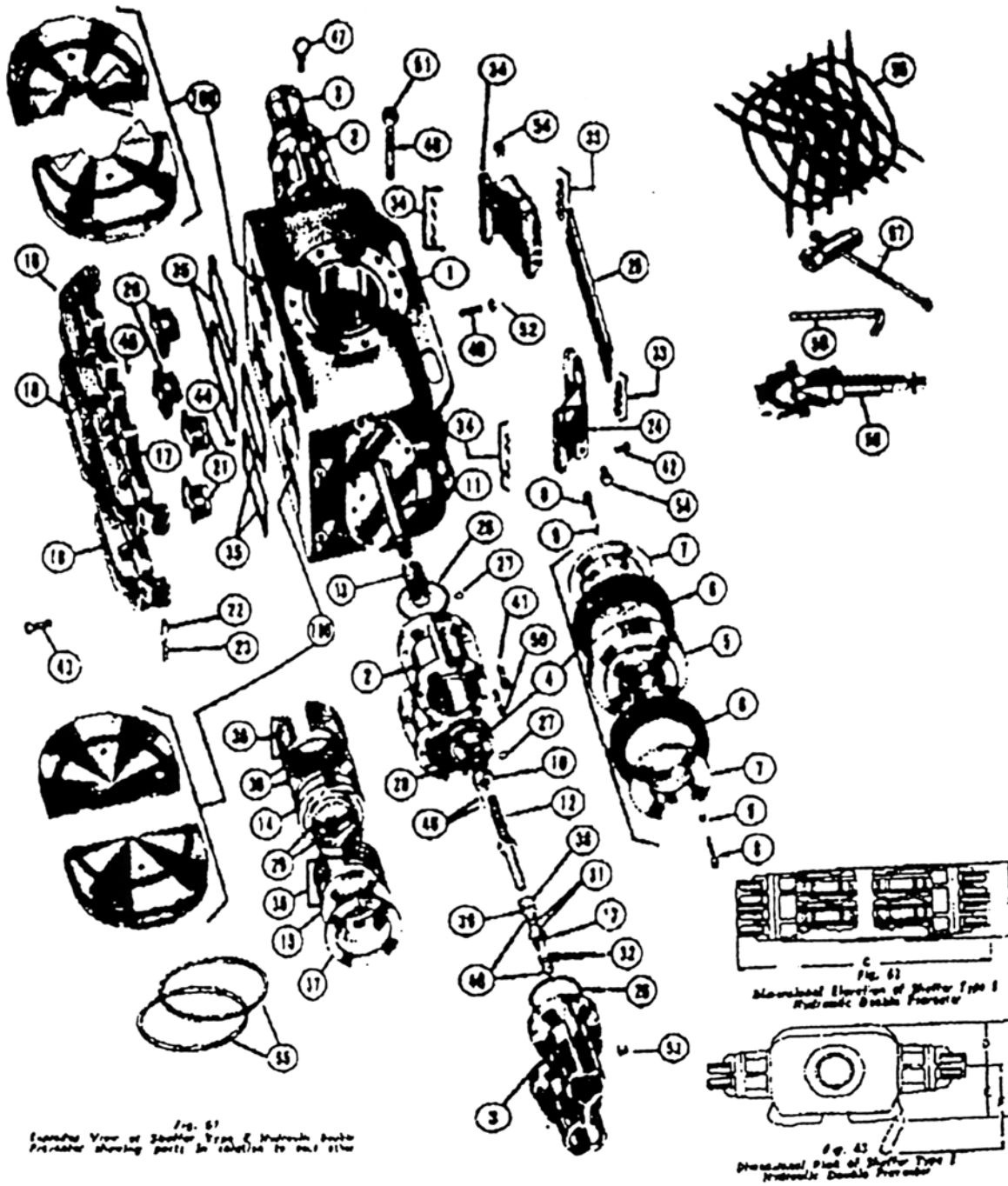

Size	Press. Rat	Test Press	Vertical bore
10"	3,000 psi	6,000 psi	11"

Hieght	width	Length	Close	open
27 1/2"	34 1/4"	80 1/8	3.25 gals	2.7 gals

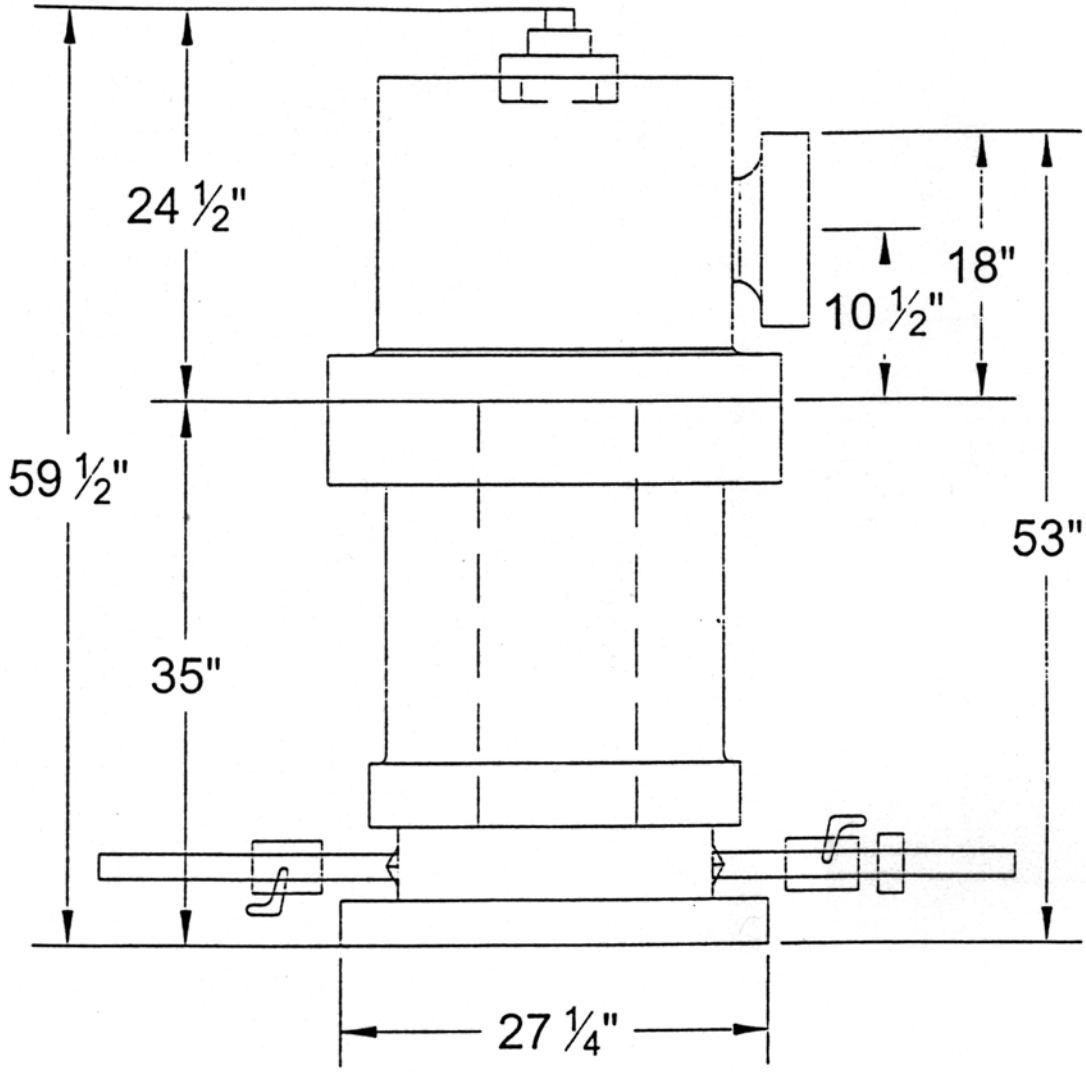

SPECIFICATIONS

10" - 900 FLANGES ON B.O.P.
10" - 900 FLANGE ON ROTATING HEAD
6" - 600 FLANGE ON FLOWLINE
2" - COLLAR ON EACH SIDE OF B.O.P. AT BOTTOM

PETROLUEM DEVELOPMENT CORP.

SCHEMATIC

1500 P.S.I. REAGAN ANNULAR B.O.P.

SCALE: AS NOTED	DATE: 05.04.01	DRAWN BY: MTM	FIGURE: 1

1172/Exhibit A

BOTTOM FLANGE ON ANNULAR B.O.P.

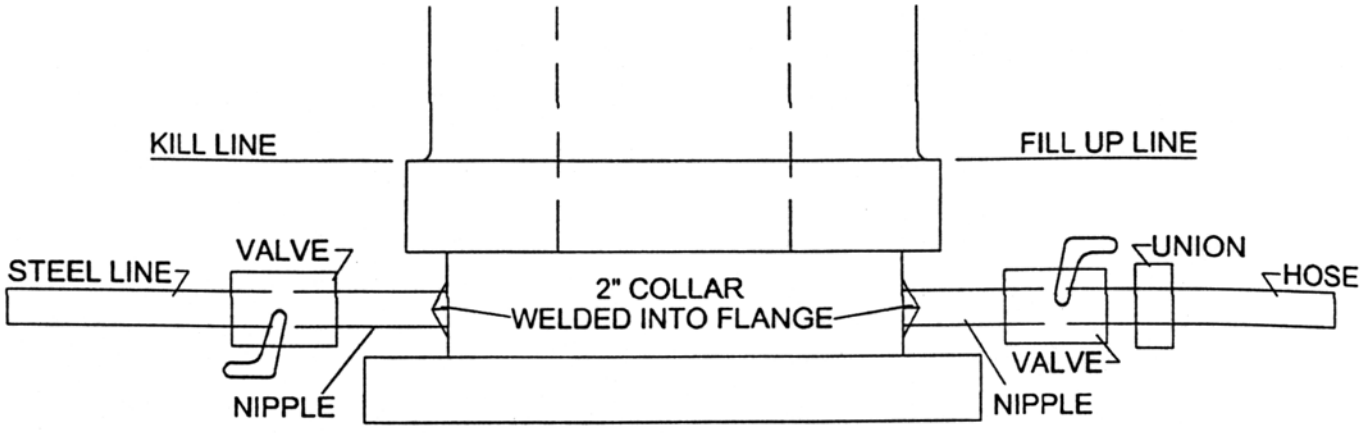

2M CHOKE MANIFOLD EQUIPMENT

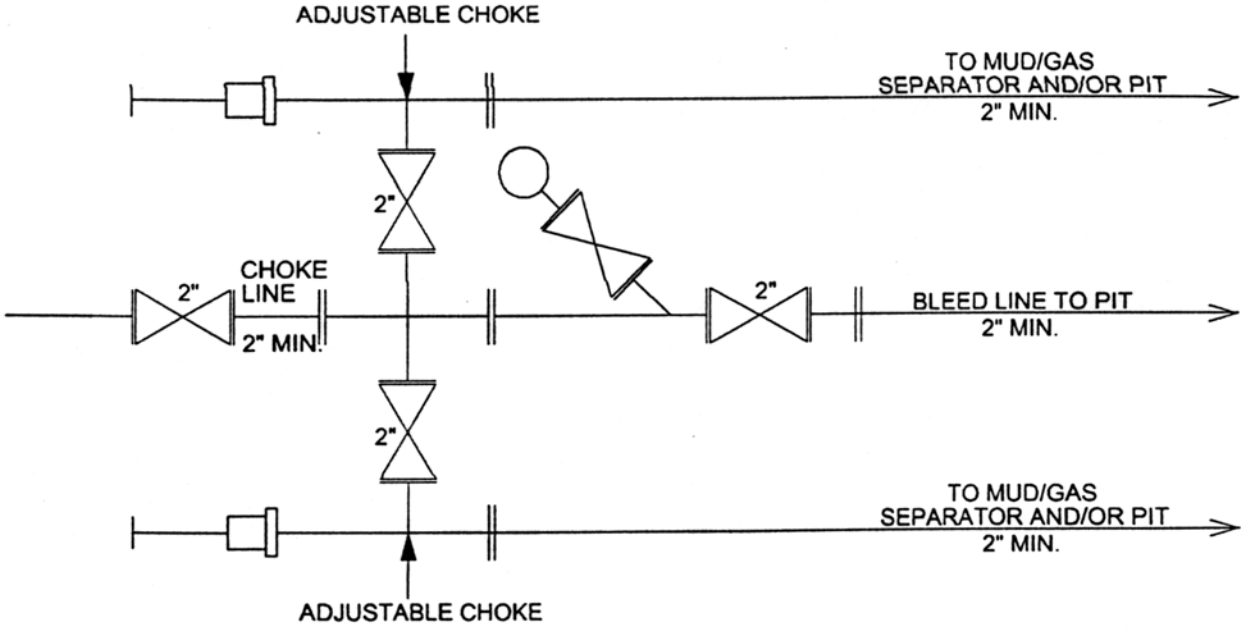

SPECIFICATIONS

10" - 900 FLANGES ON B.O.P.
10" - 900 FLANGES ON ROTATING HEAD
6" - 600 FLANGE ON FLOWLINE
2" - COLLAR ON EACH SIDE OF B.O.P. AT BOTTOM

PETROLUEM DEVELOPMENT CORP.

SCHEMATIC

BOTTOM FLANGE ON ANNULAR B.O.P. &
2M CHOKE MANIFOLD EQUIPMENT

SCALE: as noted	DATE: 05.04.01	DRAWN BY: MTM	FIGURE: 2

1172/Exhibit A

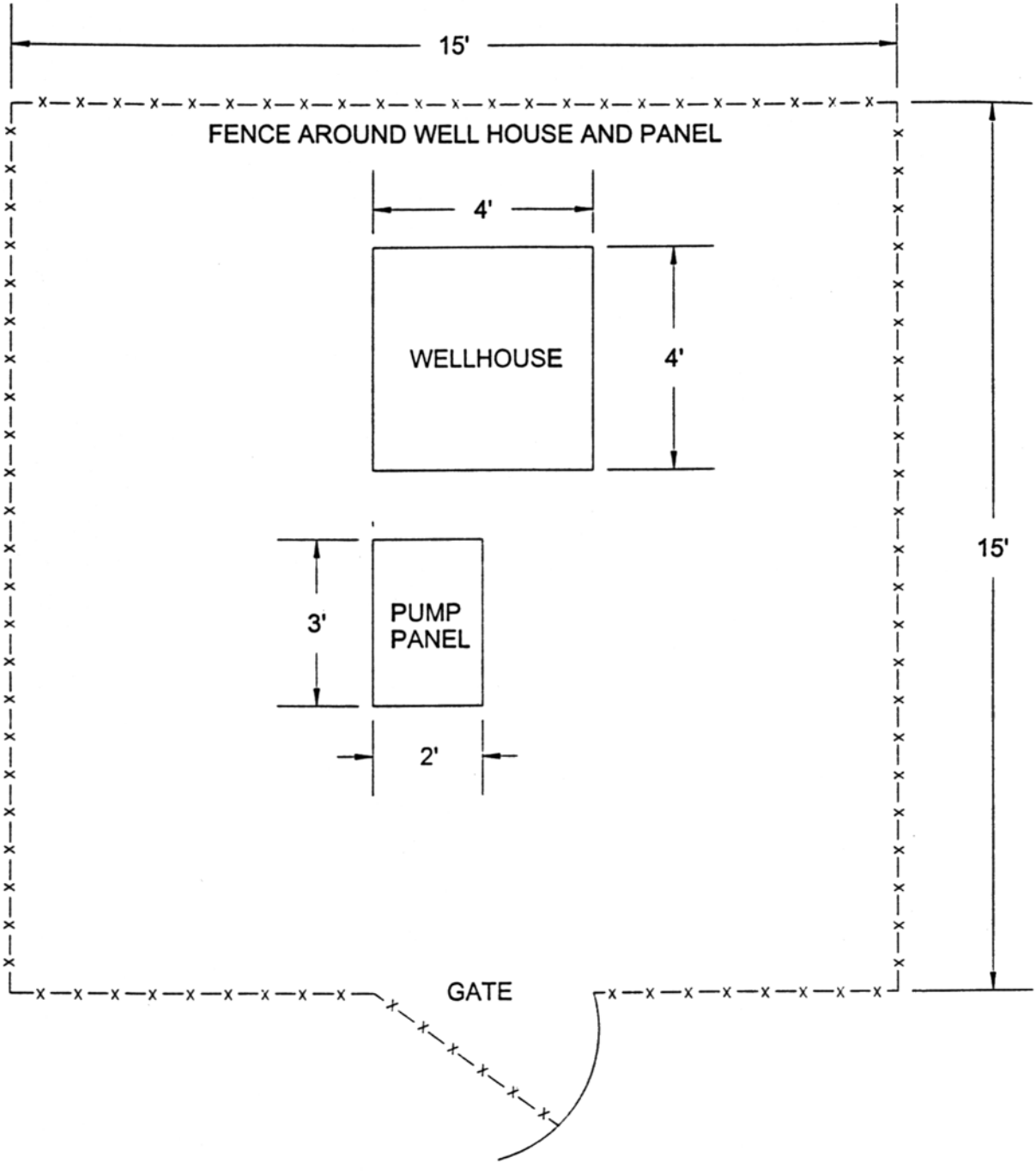

PETROLUEM DEVELOPMENT CORP.

TYPICAL CBM WELL SITE

SCALE: NTS	DATE: 05.04.01	DRAWN BY: MTM	FIGURE: 5

1172/Exhibit A

MANDREL STYLE

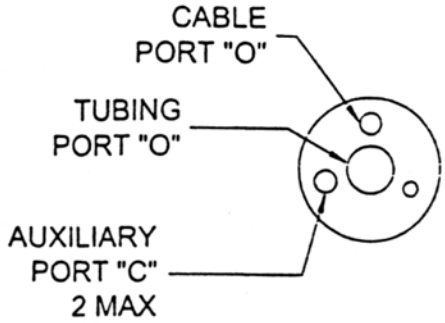

GS-3 / GS-4
CENTERED HANGER
WITH CABLE PORT &
UP TO 2 AUX PORTS

BODY STYLES

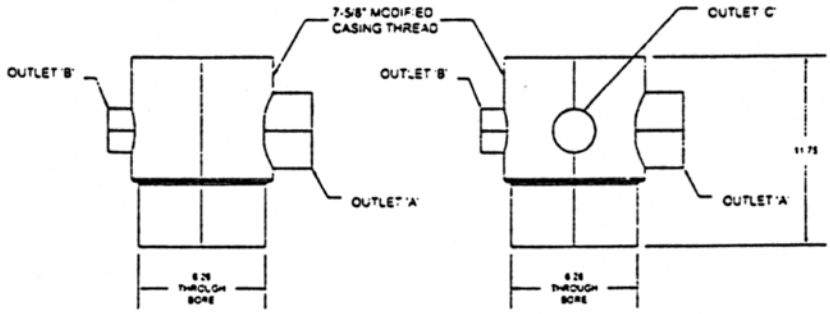

4 x 3 STYLE

4 x 2 STYLE

Standard Body Configurations				
Body Style	Bottom Connection	Outlet "A"	Outlet "B"	Outlet "C"
4 x 2	7" Short Casing (Male or Female)	4' LP Female	2" LP Female	NA
4 x 3	7" Short Casing (Male or Female)	4" LP Female	3" LP Female	NA
4 x 2 x 2	7" Short Casing (Male or Female)	4" LP Female	2" LP Female	2" LP Female

Standard Mandrel Configurations				
Mandrel Style	Port "C"	Port "D"	Port "E"	Approx Wt - LBS
GS-3	2-3/8" UPTBG Box Down X	1" LP	(1) 1/2" LP Box Up	26
GS-4	2-3/8" UPTBG Box Up	Box Up	(2) 1/2" LP Box Up	26

PETROLUEM DEVELOPMENT CORP.

CONFIGURATION OPTIONS

SCALE: NTS	DATE: 05.04.01	DRAWN BY: MTM	FIGURE

1172/Exhibit A

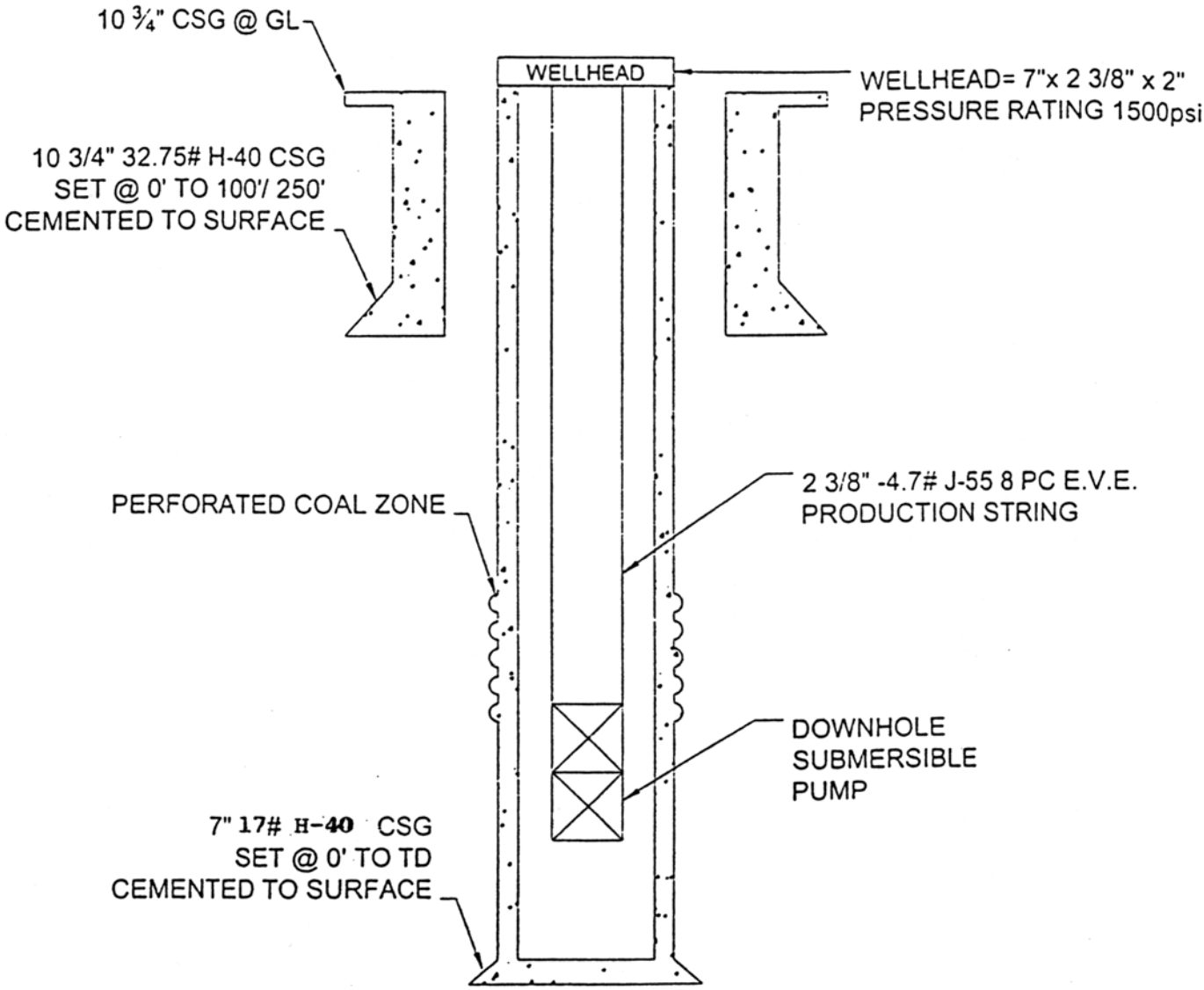

PETROLUEM DEVELOPMENT CORP.

TYPICAL CBM COMPLETED WELL

SCALE: NTS	DATE: 05.04.01	DRAWN BY: MTM	FIGURE: 4

1172/Exhibit A

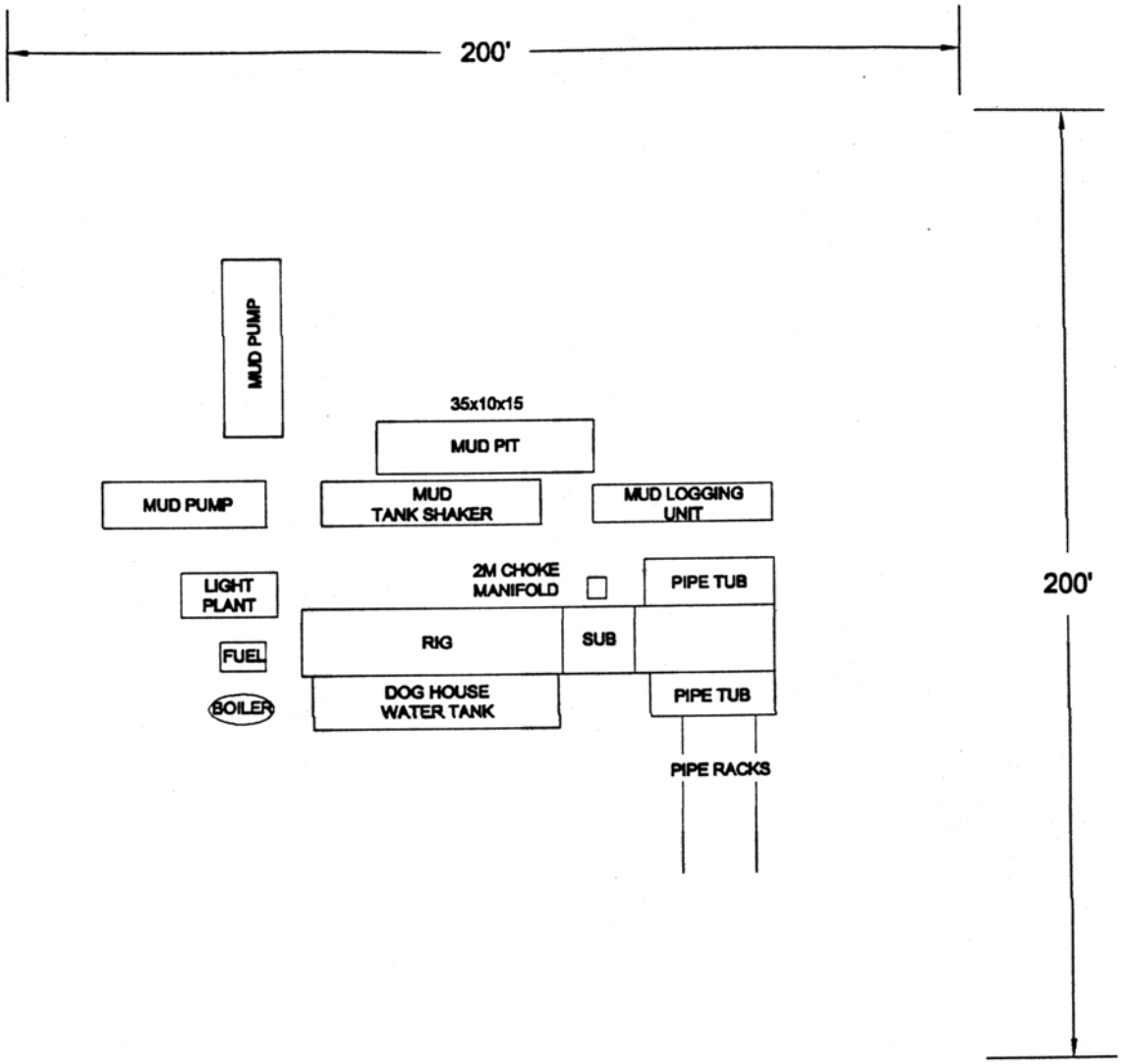

PETROLUEM DEVELOPMENT CORP.

TYPICAL DRILLSITE LAYOUT

SCALE: NTS	DATE: 5.18.01	DRAWN BY: ML	FIGURE: -

1172/Exhibit A

APPENDIX C-4

WATER MANAGEMENT PLAN

OPERATOR: Petroleum Development Corporation (PEDCO)

Sun Dog Pod

Carbon County, Wyoming

The Sun Dog Pod is 1 of 9 pods that comprise the Atlantic Rim Coalbed Methane Interim Drilling Project. The Sun Dog Pod consists of 10 gas wells and related water disposal wells. This Water Management Plan will address 6 of the 10 planned interim development wells located in T16N,R91W Section 17. The remaining 4 gas wells located in T16N,91W Sec.8:S2 were previously addressed under the Dry Cow Pod Water Management Plan. Water injection wells will be used to dispose of water produced during testing and production of methane gas.

Before the injection wells are drilled and completed, water produced from CBM wells may be transported to nearby drilling locations and used to drill additional wells. Any produced water will be contained in the drilling reserve pit constructed on each well pad until the injection wells are completed. Once all wells have been drilled, water produced at the exploratory well sites would be gathered and transported to the injection wells for disposal, which would be permitted by all necessary agencies.

See attached diagrams of **typical injection well, water transfer facility and water disposal facility**.

The injection well will be drilled, cased, cemented to surface and the Cherokee and/or Deep Creek sands will be tested to determine their suitability for water disposal. The estimated depths of these formations are 3200' and 3400' respectively.

Typically, a single injection well would be used for several gas wells. The number of producing gas wells per injection well will depend on the suitability of the Cherokee and Deep Creek sands and the amount of produced water from each gas well.

The source of the water to be disposed will be from the coal formations of the Mesaverde Group. Water will be transported from each gas well to the injection well by buried 2" poly pipe. Transfer pumping stations may need to be utilized in areas where elevation differences require supplemental pumping to transfer the produced water. A typical water transfer facility consists of a 400 bbl water tank with associated pump and piping.
Locations of water transfer facilities will be submitted via Sundry Notice.

To keep surface damage to a minimum, ditches will combine as many pipelines as possible (i.e., water, electricity, gas).

A typical water injection facility will consist of four – 400 bbl water tanks, pump house, piping, and well house for the disposal well.

Both the Cherokee and Deep Creek formations are isolated above and below by competent shale barriers. These shales will prevent the initiation and propagation of fractures through overlying strata to any fresh water zones.

APPENDIX C-4: WATER MANAGEMENT PLAN

PEDCO hereby certifies that:

1. All potentially affected landowners having properly permitted water wells with the Wyoming State Engineer's Office within each proposed well's Circle of Influence (one-half mile radius) were offered a Water Well Agreement; and

2. If a Water Well Agreement is not reached with the landowner, PEDCO agrees to mitigate the impacts of its coalbed methane wells in accordance with State of Wyoming water laws; and

3. Pedco has applied for a Permit to Appropriate Groundwater from the Wyoming State Engineer's Office, concurrently with the Applications for Permit to Drill.

Lessees Representation and Certification – Sun Dog Pod
Mr. Scott Hedlund
Compliance Technician
PEDCO
801 E. 4th St., Ste. 23
Gillette, WY 82716
(307) 682-4088

PEDCO: Date: August 21, 2001

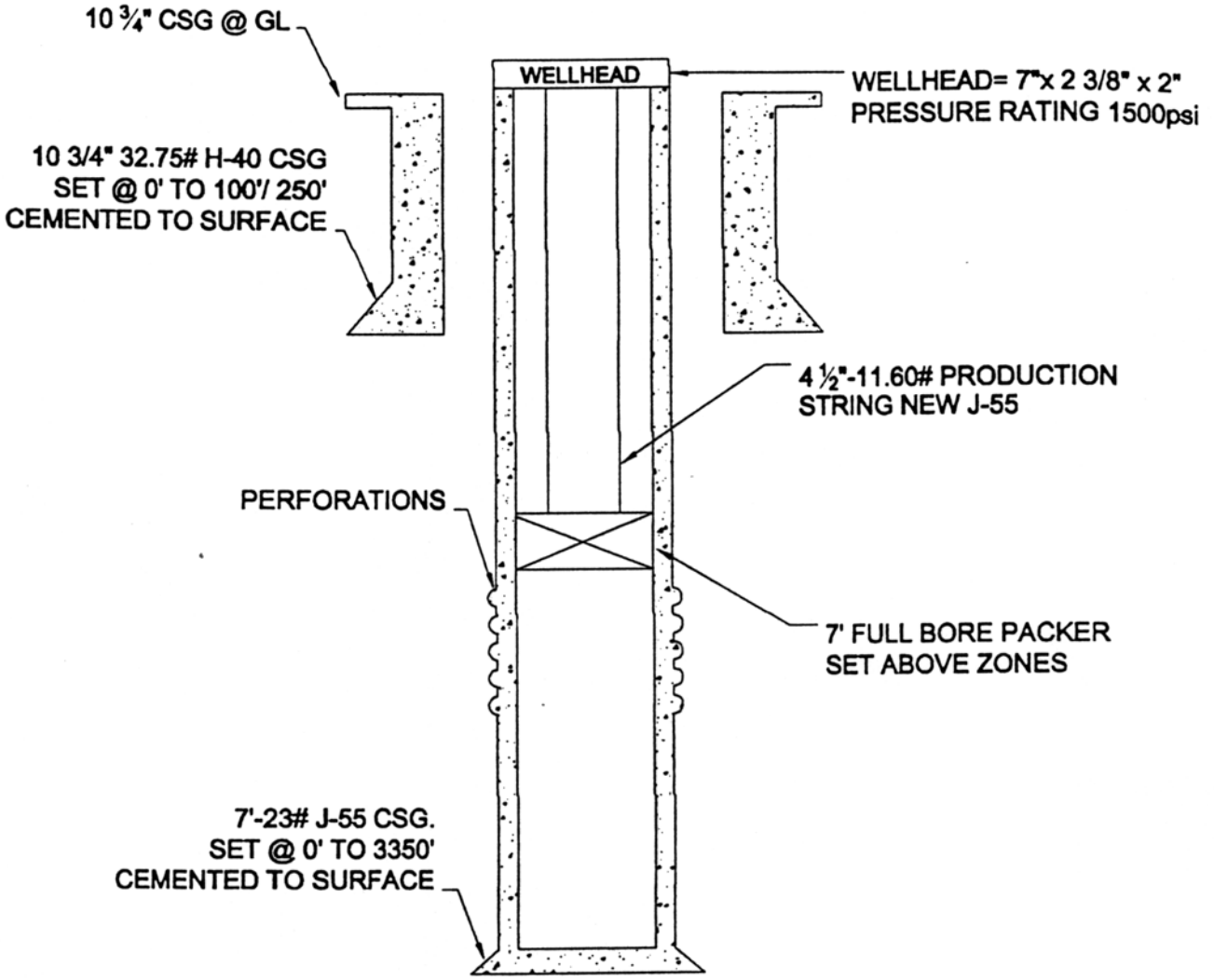

PETROLUEM DEVELOPMENT CORP.

INJECTION WELL

SCALE: NTS	DATE: 05.04.01	DRAWN BY: MTM	FIGURE: 7

1172/Exhibit A

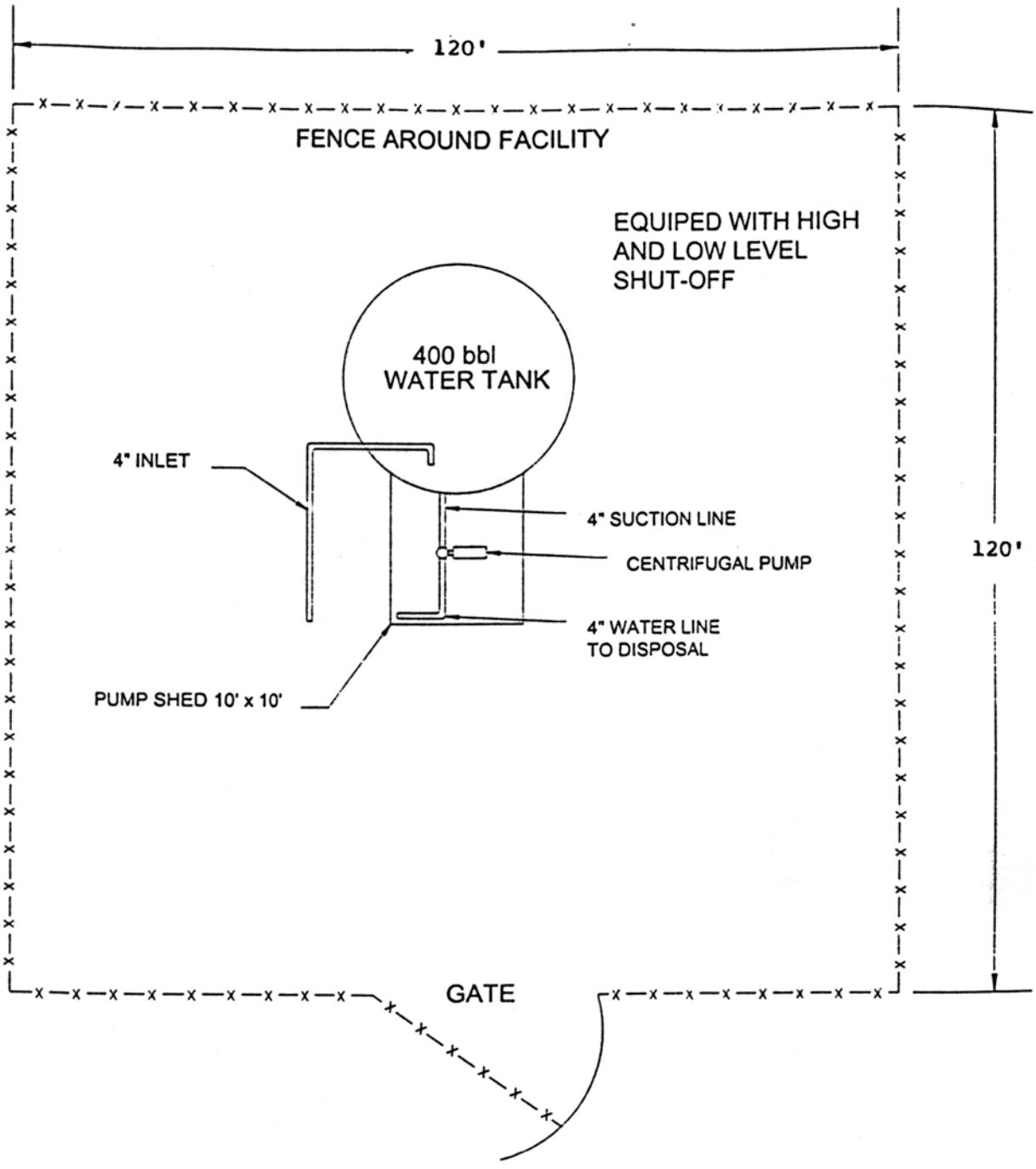

PETROLUEM DEVELOPMENT CORP.

TYPICAL WATER TRANSFER FACILITY

SCALE: NTS	DATE: 05.04.01	DRAWN BY: MTM	FIGURE: 9

1172/Exhibit A

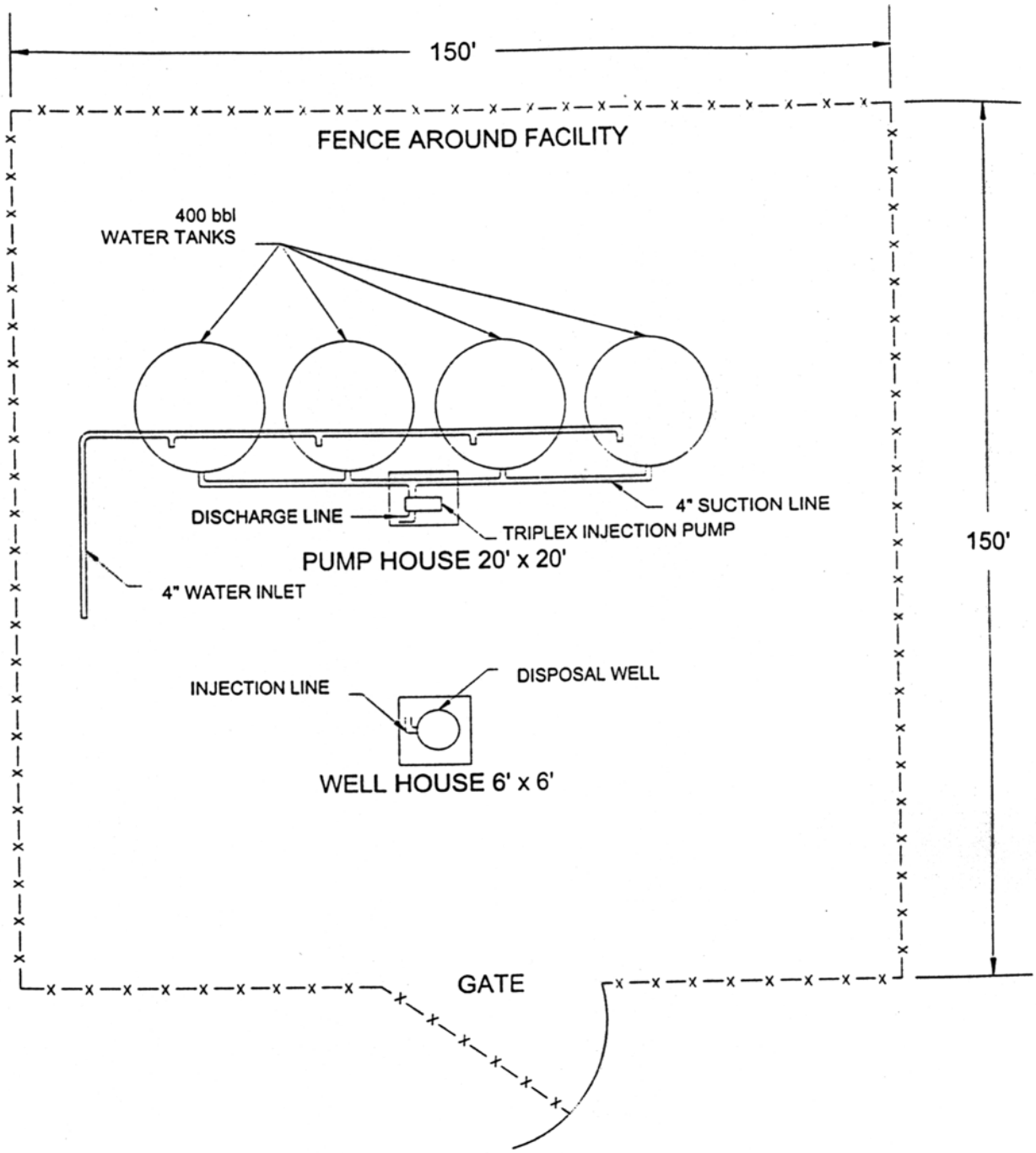

PETROLUEM DEVELOPMENT CORP.

TYPICAL WATER DISPOSAL FACILITY

SCALE: NTS	DATE: 05.04.01	DRAWN BY: MTM	FIGURE: 8

1172/Exhibit A

Appendix D

SPECIES OF CONCERN: PLANTS AND WILDLIFE

Appendix D

Plant and Wildlife Species of Concern that may potentially occur on or near the Sun Dog Pod.

Plant Species of Concern[1]					
Species	**Counties of Distribution**	**Wyoming Range**	**Status[2]**	**Probability of Occurrence**	**Habitat**
Smallflower androstephium (*Androstephium breviflorum*)	Carbon, Sweetwater	Peripheral	G5/S1	moderate potential	open, south-facing slopes; erosional slopes; deep sandy-silty-loamy soils
Crandall's rock-cress (*Arabis crandallii*)	Carbon, Sweetwater	Regional Endemic	G2/S1	unlikely	rocky-sandy ridges in juniper woodlands
Hayden's milkvetch (*Astragalus bisculatus* var *haydenianus*)	Carbon, Fremont, Lincoln?, Sweetwater, Uinta?	Peripheral	G5T4?/ S1	moderate potential to occur along wet draws and riparian areas	moist clay soils; spring draws; associated with dense gramanoids and shrubs
Wolf's orache (*Atriplex wolfii*)	Carbon, Sweetwater	Regional Endemic	G3G4/ S1	moderate potential to occur in greasewood fans & flats	alkaline or clay soils; elevated mounds near aquatic sites; associated with greasewood
Payson's tansymustard (*Descurania pinnata* ssp. *paysonii*)	Carbon, Laramie, Sweetwater	Regional Endemic	G5T3?/ S2	potential to occur within the vicinity of the Dry Cow Creek pod	stabilized sand dunes
Little golden-aster (*Heterotheca pumila*)	Carbon (unlikely in project area)	Regional Endemic	G4/S1	highly unlikely	sub-alpine and mountainous habitats
Weber's scarlet-gilia *(Ipomopsis aggregata* ssp *weberi)*	Carbon, Albany	Peripheral	R2, G5T1T 2/S1	highly unlikely	openings in coniferous forests and scrub oak woodlands.
Rusby's stickleaf (*Mentzelia rusbyi*)	Carbon, Albany	Peripheral	G3G4/ S1	unlikely	barren , rocky slopes or banks with coarse, thin soils

APPENDIX D: PLANT AND WILDLIFE SPECIES OF CONCERN

Plant Species of Concern[1]					
Species	**Counties of Distribution**	**Wyoming Range**	**Status[2]**	**Probability of Occurrence**	**Habitat**
Gibben's beardtongue (*Penstemon gibbensii*)	Carbon, Sweetwater	Regional Endemic	G1/S1 BLM	moderate potential to occur (known to occur within 20 miles of project area along southern border of Carbon and Sweetwater Counties)	barren, south-facing slopes on loose, pale, sandy-clay derived from Brown's Park Formation; may occur in grass-dominated sites with scattered shrubs; semi-barren fringed sagebrush (*A. frigida*) / thickspike wheatgrass communities with 15-20% vegetation cover, or ashy-clay barrens on steep slopes amid *Cercocarpus montanus*; also may occur on outcrops of Green River Formation on steep, yellowish sandstone-shale slopes below caprock ridges
Rydberg twinpod (*Physaria vitulifera*)	Carbon, Albany	Regional Endemic	G4/S1	unlikely	rocky meadows; montane transition areas; bare ground in and among sagebrush associations (*Artemisia* spp)
Many-headed broom groundsel (*Senecio spartoides* var *multicapitus*)	Carbon, Sweetwater	Peripheral	G4/S1	potential to occur within the vicinity of the Dry Cow Creek pod	stabilized sand dunes

APPENDIX D: PLANT AND WILDLIFE SPECIES OF CONCERN

Wildlife Species of Concern[1]		
Common Name	**Scientific Name**	**Sensitivity Status/Rank[2]**
Mammals		
Wyoming pocket gopher	*Thomomys clusius*	R2, G2/S1S2
Swift fox	*Vulpes velox*	C, R2, G2/S2S3, SSC3
Birds		
Northern goshawk	*Accipiter gentilis*	R2, G5/S2S3B, S4N, SSC4
Columbian sharp-tailed grouse	*Tympanuchus phasianellus*	R4
Snowy plover	*Charadrius alexandrius*	R2, G4/S1B, S2?N
Burrowing owl	*Athene cunicularia*	R2, G4/S3B, SZN, SSC4
Reptiles		
Smooth green snake	*Liochlorophis vernalis*	G5/S2
Fish		
Roundtail chub	*Gila robusta*	G2G3/S2?, NSS1
Bluehead sucker	*Catostomus discobolus*	G4/S2S3, NSS1
Flannelmouth sucker	*Catostomus latipinnis*	G3G4/S3, NSS1
Colorado River cutthroat trout	*Oncorhynchus clarki pleuriticus*	G4T2T3/S2, NSS2, FSR2/R4

1 - Sources: Dorn 1992, Fertig and Beauvais 1999, WYNDD 2000
2 - Definition of status:

Global Rank/Definition

G1 Critically imperilled globally because of extreme rarity (5 or fewer occurrences or very few remaining individuals) or because of some factor of its biology that makes it especially vulnerable to extinction (Critically endangered throughout range).

G2 Imperiled globally because of rarity (6 to 20 occurrences) or because of other factors demonstrably making it very vulnerable to extinction throughout its range (Endangered throughout range).

G3 Either very rare and local throughout its range or found locally (even abundant at some of its locations) in a restricted range, or because of other factors making it vulnerable to extinction throughout its range (21 to 100 occurrences; Threatened throughout its range).

G4 Apparently secure globally, though it may be quite rare in parts of its range, especially at the periphery.

G5 Demonstrably secure globally, though it may be quire rare in parts of its range, especially at the periphery.

State Rank

S1 Critically imperiled in Wyoming because of extreme rarity (five or fewer occurrence, or very few remaining individuals) or because of some factor of its biology making it especially vulnerable to extinction (Critically endangered in state).

S2 Imperiled in Wyoming because of rarity (6 to 20 occurrences) or because of other factors demonstrably making it very vulnerable to extinction throughout its range (Endangered in state).

S3 Rare in Wyoming (on the order of 20+ occurrences) (Threatened in state).

S4 Apparently secure in Wyoming.

S5 Demonstrably secure in Wyoming.

Other Codes

T Rank for a subspecific taxon (species or variety); appended to the global rank for the full species.

? Assigned status questionable.

R2 Designated sensitive in U.S. Forest Sevice Region 2

SSC3 WGFD Species of Special Concern (SSC) in which 1) habitat is not limited, but populations are greatly restricted or declining and extirpation appears possible; 2) habitat is limited or vulnerable, although no significant recent loss has occurred, and populations are declining or restricted in numbers or distribution, but exterpation is not imminent; or 3) significant habitat loss is ongoing, but the species is widely distributed and population trends are thought to be stable.

SSC4 WGFD Species of Special Concern (SSC) in which 1) habitat is stable and not restricted, but populations are greatly restricted or declining and exterpation appears possible; 2) habitat is limited or vulnerable; although no significant recent loss has occurred and species is not sensitive to human disturbance populations are declining or restricted in numbers and/or distribution but extirpation is not imminent; 3) habitat is restricted or vulnerable but no recent or on-going significant loss has occured; species may be sensitive to human disturbance; species is widely distributed and population status is suspected to be stable; or 4) significant habitat loss is on-going but populations are stable or increasing and not restricted in numbers or distribution.

BLM BLM-identified Special Status plants in the Great Divide Resource Area, Rawlins District.