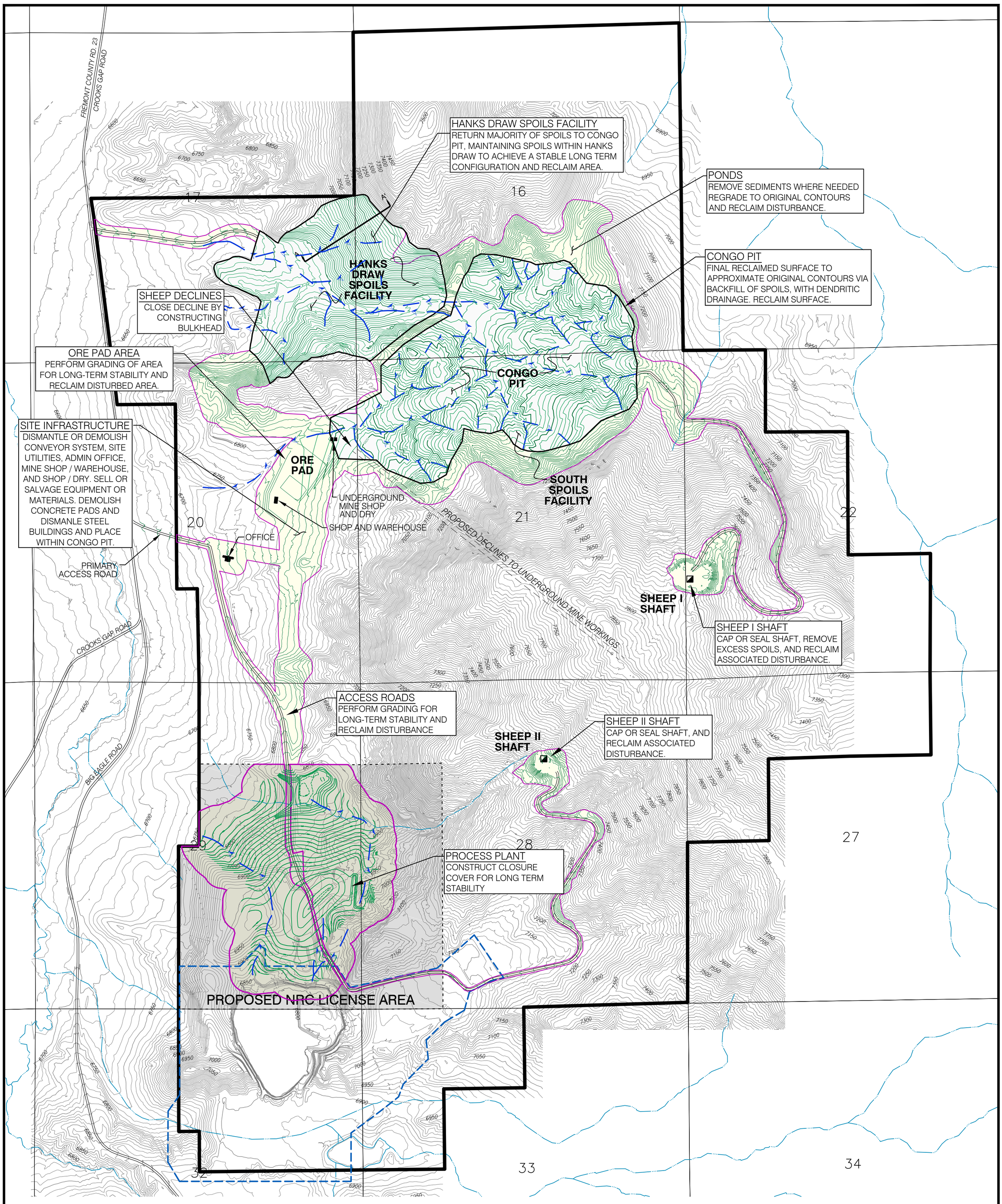

LEGEND

- SECTION LINE
- EXISTING GROUND CONTOUR
- PERMIT AREA BOUNDARY
- EXISTING MINE SHAFT
- EXISTING ROAD
- UNDERGROUND MINE DECLINE
- PROPOSED DISTURBANCE AREA
- DESIGN CONTOURS
- PROPOSED NRC LICENSE AREA
- AML APE BOUNDARY
- EXISTING DRAINAGE
- PROPOSED DRAINAGE

N
W E
S

500 250 0 500 1000
Scale: 1" = 1000'

NOTES:
1) TOPO DATA OBTAINED FROM AERIAL FLIGHT ON 10/23/2009. CONTOUR INTERVAL = 10'
2) LAND DATUM: NAD 83 WYOMING WEST CENTRAL
3) CONGO PIT RECLAMATION GRADING DEVELOPED BY BRS ENGINEERING USING NATURAL RE-GRADE

Energy Fuels

REVISIONS		SHEEP MOUNTAIN	
Date	By	County: FREMONT	State: WYOMING
		Location: T 28 N – R 92 W	
		MAP 5-1	
		FINAL RECLAMATION PLAN	
		Scale: 1"=1000'	Date: 10/5/15	Drafted By: RE

Congo Pit Reclamation.dwg MAP 5-1

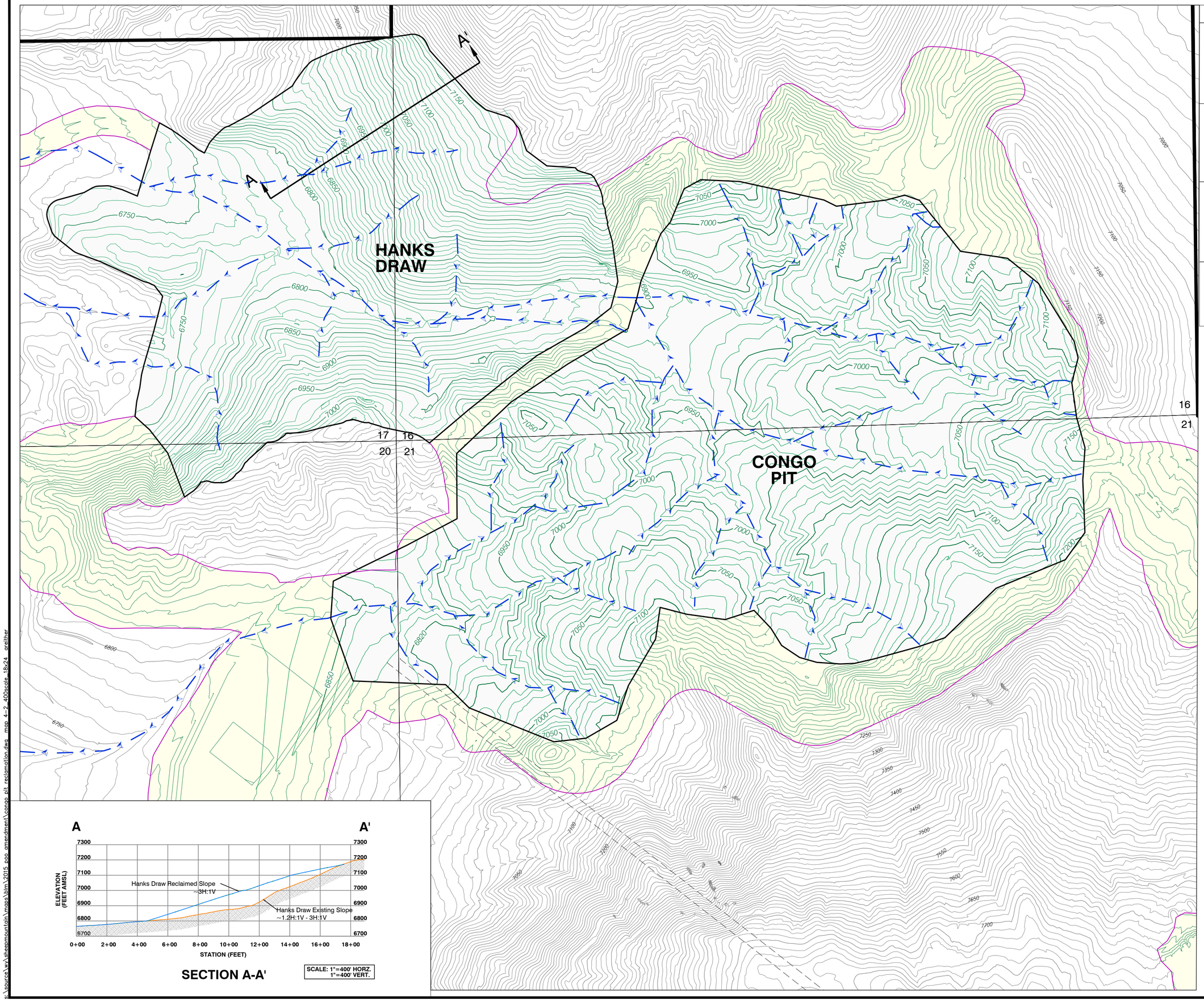

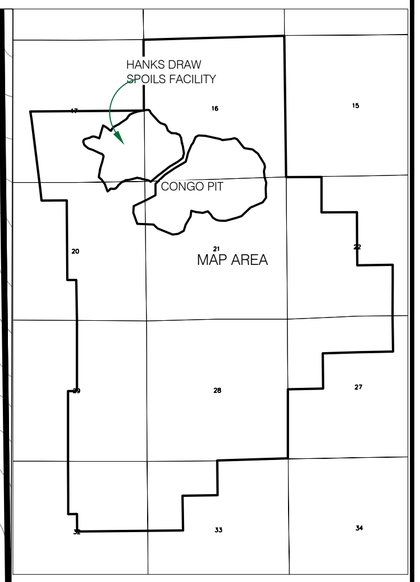

KEY MAP
1"=4000'

LEGEND

- SECTION LINE
- EXISTING GROUND CONTOUR
- PERMIT AREA BOUNDARY
- EXISTING ROAD
- PROPOSED DISTURBANCE AREA
- DESIGN CONTOURS
- DESIGN CHANNEL FLOW LINE
- NATURAL REGRADE BASIN OUTLINES
- UNDERGROUND MINE DECLINE

N
W E
S

200 100 0 200 400
Scale: 1" = 400'

NOTES:
1) TOPO DATA OBTAINED FROM AERIAL FLIGHT ON 10/23/2009. CONTOUR INTERVAL = 10'
2) LAND DATUM: NAD 83 WYOMING WEST CENTRAL
3) CONGO PIT RECLAMATION GRADING DEVELOPED BY BRS ENGINEERING USING NATURAL RE-GRADE

SECTION A-A'

SCALE: 1"=400' HORZ.
1"=400' VERT.

Energy Fuels

REVISIONS		SHEEP MOUNTAIN	
Date	By	County: FREMONT	State: WYOMING
		Location: T 28 N – R 92 W	
		MAP 5-2	
		CONGO PIT AREA RECLAMATION PLAN	
		Scale: 1"=400'	Date: 10/2/15	Drafted By: RE

Congo Pit Reclamation.dwg MAP 4-2_400scale_18x24

s:\source\wx\sheepmountain\maps\blm\2015 poo amendment\congo pit reclamation.dwg map 4-2_400scale_18x24 arether

LEGEND

- EXISTING GROUND PROFILE
- GRANULAR BACKFILL
- CONCRETE
- EXISTING GROUND

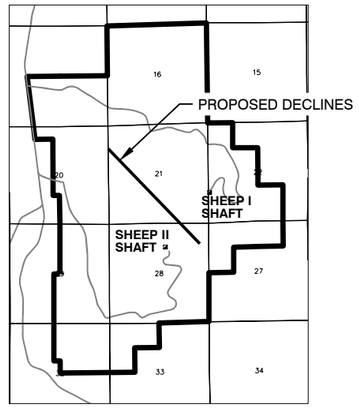

KEY MAP
1"=8000'

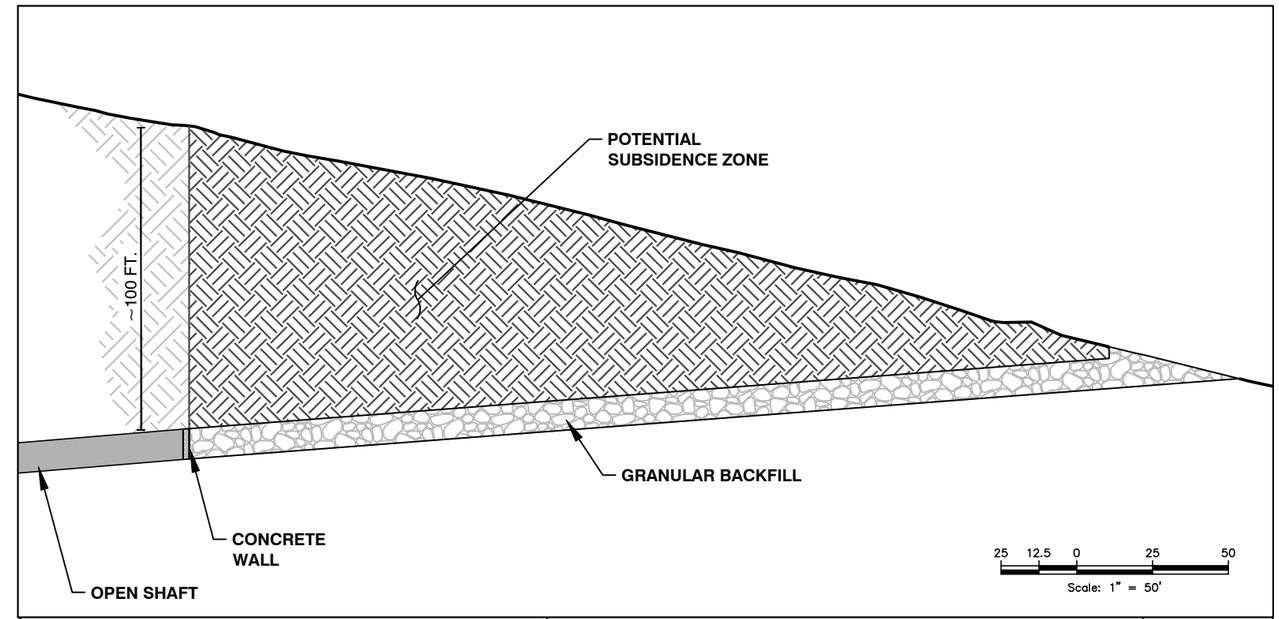

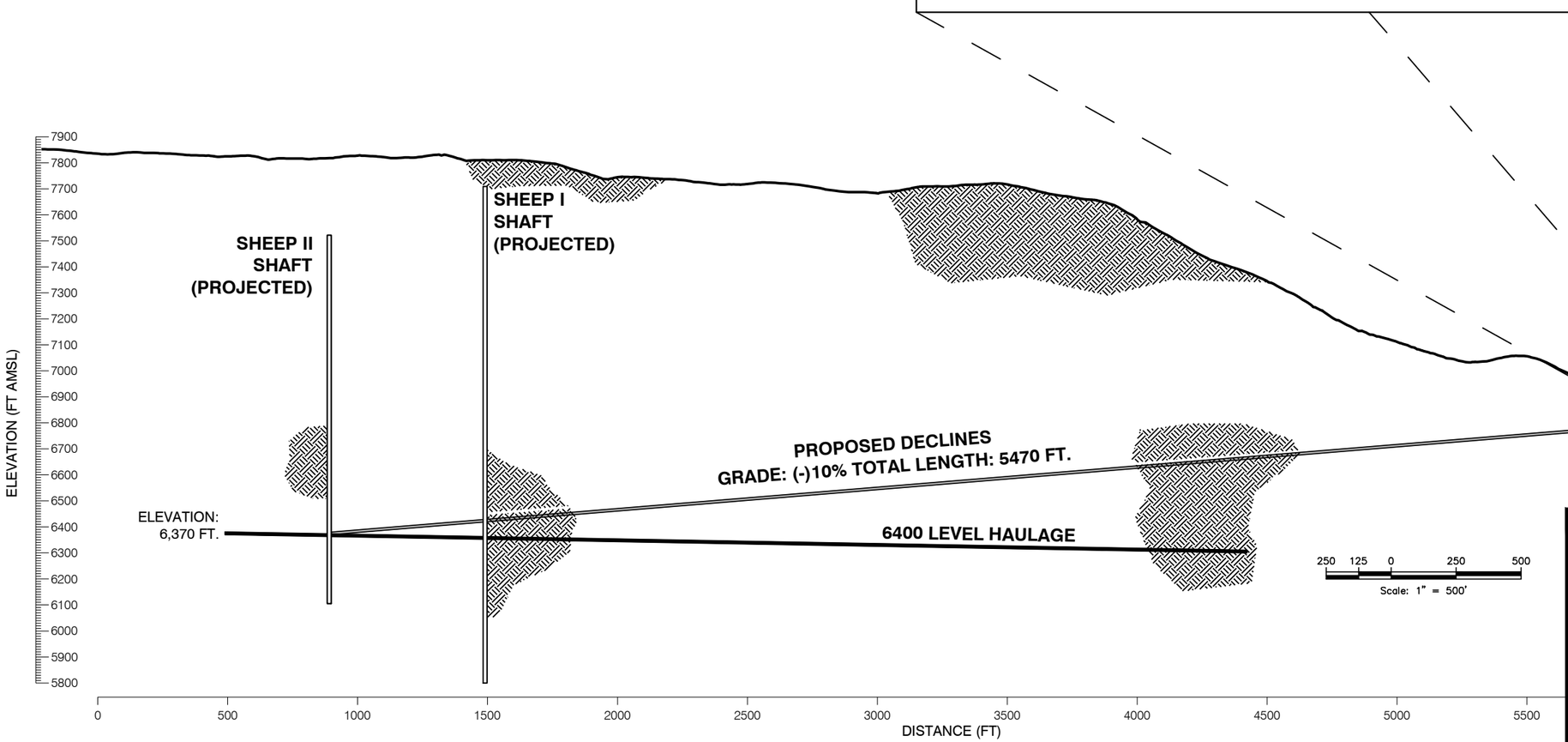

Energy Fuels

REVISIONS		SHEEP MOUNTAIN	
Date	By	County: FREMONT	State: WYOMING
		Location: T 28 N – R 92 W	
		MAP 5-3	
		SHEEP DECLINE RECLAMATION	
		Scale: Varies	Date: 9/28/15	Drafted By: RE

Reclamation Details.dwg MAP 5-3

RIPPING (Note 2)

NTS

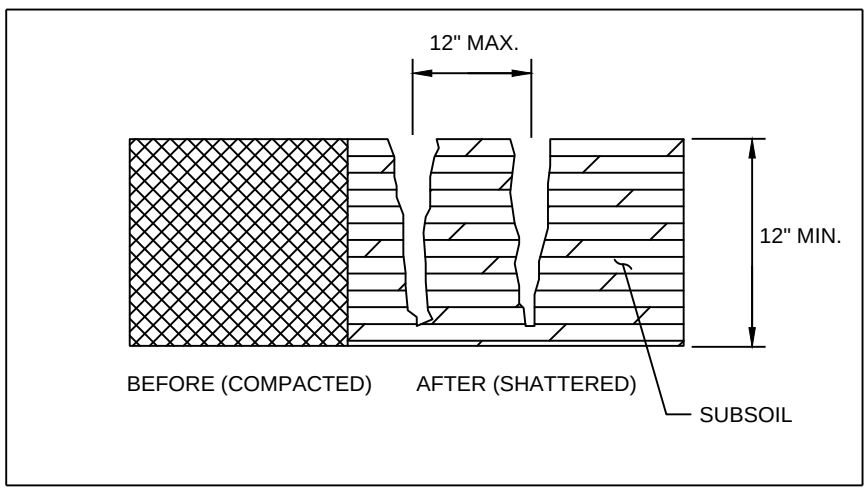

DISCING (Note 3)

NTS

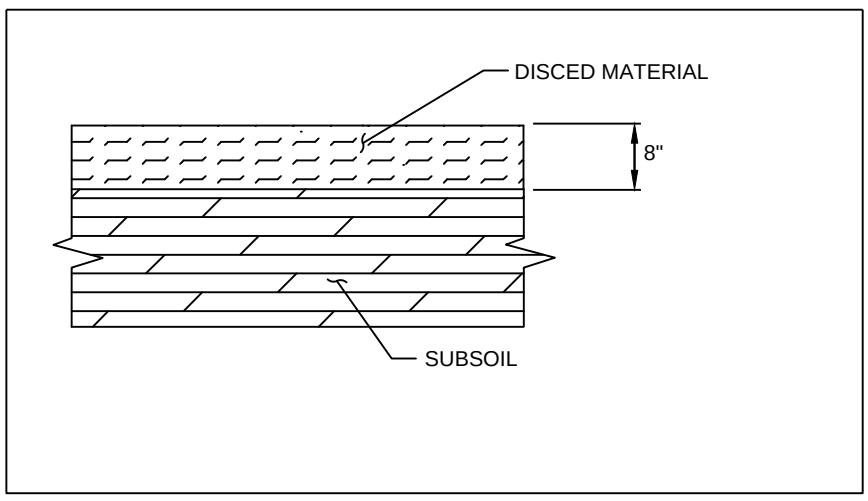

PITTING AND SEEDING (Note 4)

NTS

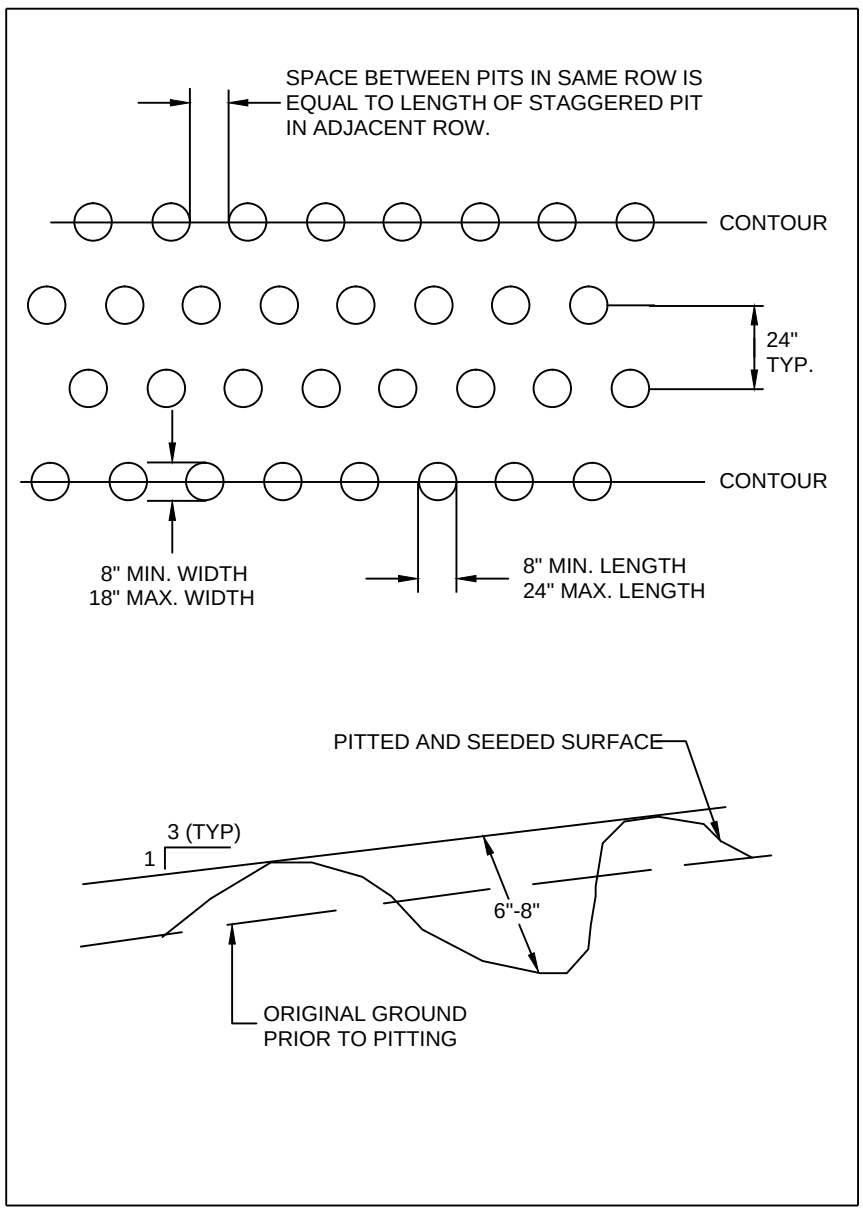

REVEGETATION SEQUENCE

1. RIPPING, DISCING, PITTING AND SEEDING SHALL ONLY BE DONE UNDER APPROPRIATE SOIL AND CLIMATIC CONDITIONS FOR AGRONOMIC PURPOSES. SOME CONDITIONS WHICH MAY PREVENT ACCEPTABLE SOIL PREPARATION INCLUDE: SOILS TOO WET; FORMATION OF CLODS DURING RIPPING, FROZEN CONDITIONS OR SOILS TOO DRY.

2. THE GROUND SURFACE WILL BE BROUGHT TO THE LINES AND GRADES REFLECTING APPROXIMATE DESIGN CONTOURS AND BLENDED WITH ADJACENT TOPOGRAPHY AT THE COMPLETION OF GRADING. RIPPING SHALL BE PERFORMED ON AREAS OF COMPACTED SUBSOIL PRIOR TO TOPSOIL PLACEMENT.

3. TOPSOIL SHALL BE STAGED IN THE RECLAMATION AREA AND THEN SPREAD WITH A LOW GROUND PRESSURE (LGP) DOZER TO LIMIT COMPACTION. TOPSOIL SHALL BE PLACED ON THE SURFACE IN A MINIMUM 6" THICK LAYER ALONG CONTOUR.

4. FERTILIZER SHALL BE APPLIED TO THE RIPPED COVERSOIL AT THE RATE DESCRIBED IN THE SPECIFICATIONS.

5. DISCING SHALL IMMEDIATELY FOLLOW FERTILIZER APPLICATION TO PRODUCE A SUITABLE SEEDBED. DISCING SHALL BE DONE TO A NOMINAL DEPTH OF EIGHT INCHES PARALLEL TO THE CONTOUR.

6. SEEDING OPERATIONS SHALL CONSIST OF DRILL AND BROADCAST SEEDING. SEEDING SHALL ONLY BE DONE DURING DAYLIGHT HOURS. DRILL SEEDING WILL BE CONDUCTED ALONG THE CONTOURS.

TYPICAL REVEGETATION OPERATION SEQUENCE DETAIL

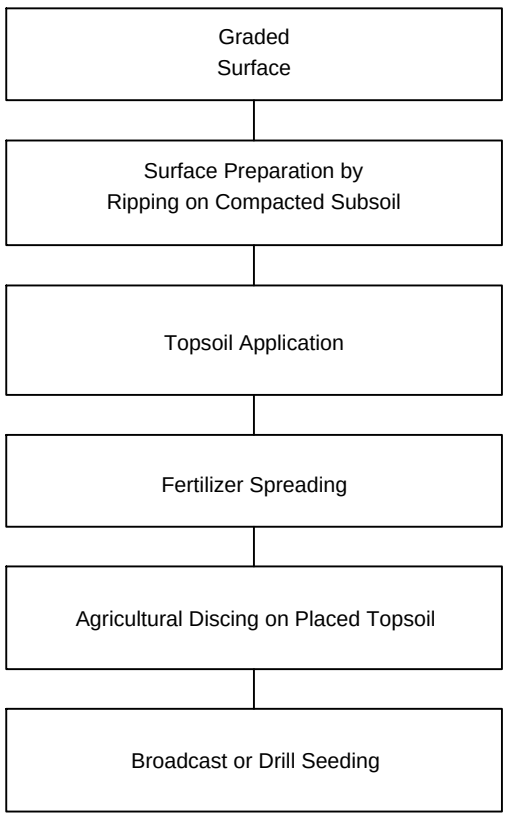

NOTES:

1. DRAWING DEVELOPED BY BRS ENGINEERING WITH MINOR MODIFICATIONS BY ENERGY FUELS.
2. SUBSOIL RIPPING SHALL BE PERFORMED TO A DEPTH OF 12" ALONG THE CONTOUR AT A MAX. SPACING INTERVAL OF 12" IN ONE PASS.
3. DISCING SHALL BE PERFORMED TO A NOMINAL DEPTH OF 8" ALONG THE CONTOUR.
4. PITS WILL ONLY BE USED ON 3H:1V SLOPES OR STEEPER. FLATTER SLOPES WILL BE RIPPED ON CONTOUR. PITS TO BE CONSTRUCTED PARALLEL WITH CONTOURS.

Energy Fuels

REVISIONS		SHEEP MOUNTAIN		
Date	By	County: FREMONT	State: WYOMING	
		Location: T 28 N – R 92 W		
		MAP 5-4		
		REVEGETATION DETAILS		
		Scale: NTS	Date: 10/2/15	Drafted By: RE

Reclamation Details.dwg Map 4-4