Figure 4
Riser Structure
New Pass Peak Distribution Line Project
Churchill and Lander County, Nevada

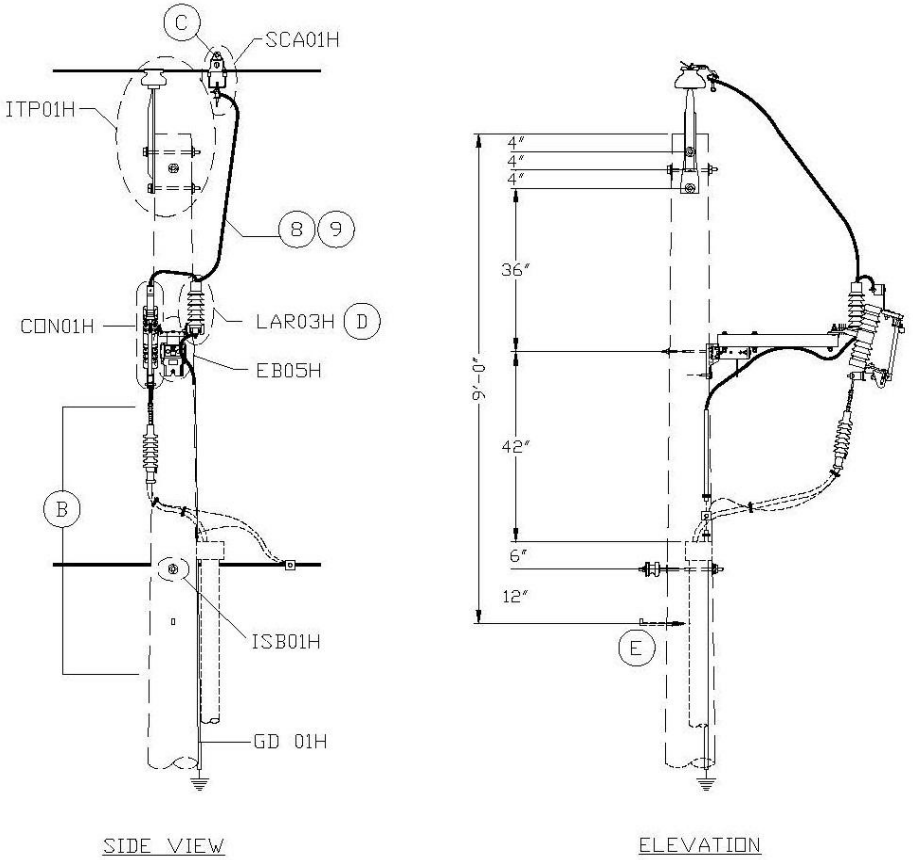

NVEnergy				Volume 3 – Structure Standard	RIS16H
Drawn:	Eng:	Appr:	Date:	OVERHEAD 1Ø TANGENT 200 AMP FUSED 1Ø RISER 4 WIRE SYSTEM	Revision: 1
BSP	JL/YR	SJ	09/02		Page 1 of 2