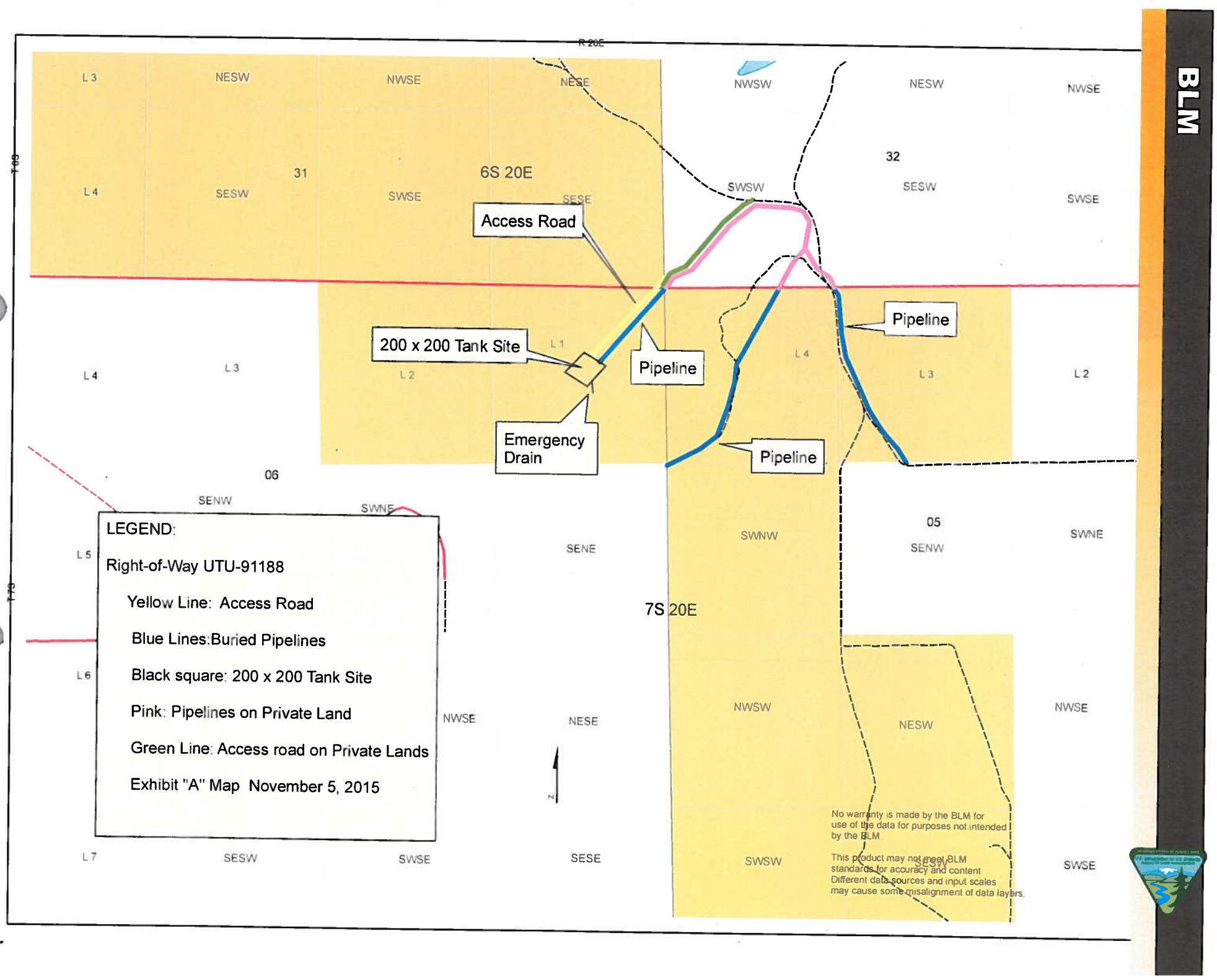
R 20E
T 6S
T 7S
L 3
NESW
NWSE
NESE
NWSW
NESW
NWSE
31
6S 20E
32
L 4
SESW
SWSE
SESE
SWSW
SESW
SWSE
Access Road
Pipeline
200 x 200 Tank Site
L 1
L 2
L 4
L 3
L 2
Pipeline
Emergency Drain
Pipeline
06
SENW
SWNE
05
SENW
SWNE
SENE
SWNW
L 5
7S 20E
L 6
NWSE
NESE
NWSW
NESW
NWSE
L 7
SESW
SWSE
SESE
SWSW
SESW
SWSE
LEGEND:
Right-of-Way UTU-91188
Yellow Line: Access Road
Blue Lines:Buried Pipelines
Black square: 200 x 200 Tank Site
Pink: Pipelines on Private Land
Green Line: Access road on Private Lands
Exhibit "A" Map November 5, 2015
No warranty is made by the BLM for use of the data for purposes not intended by the BLM
This product may not meet BLM standards for accuracy and content Different data sources and input scales may cause some misalignment of data layers.
BLM

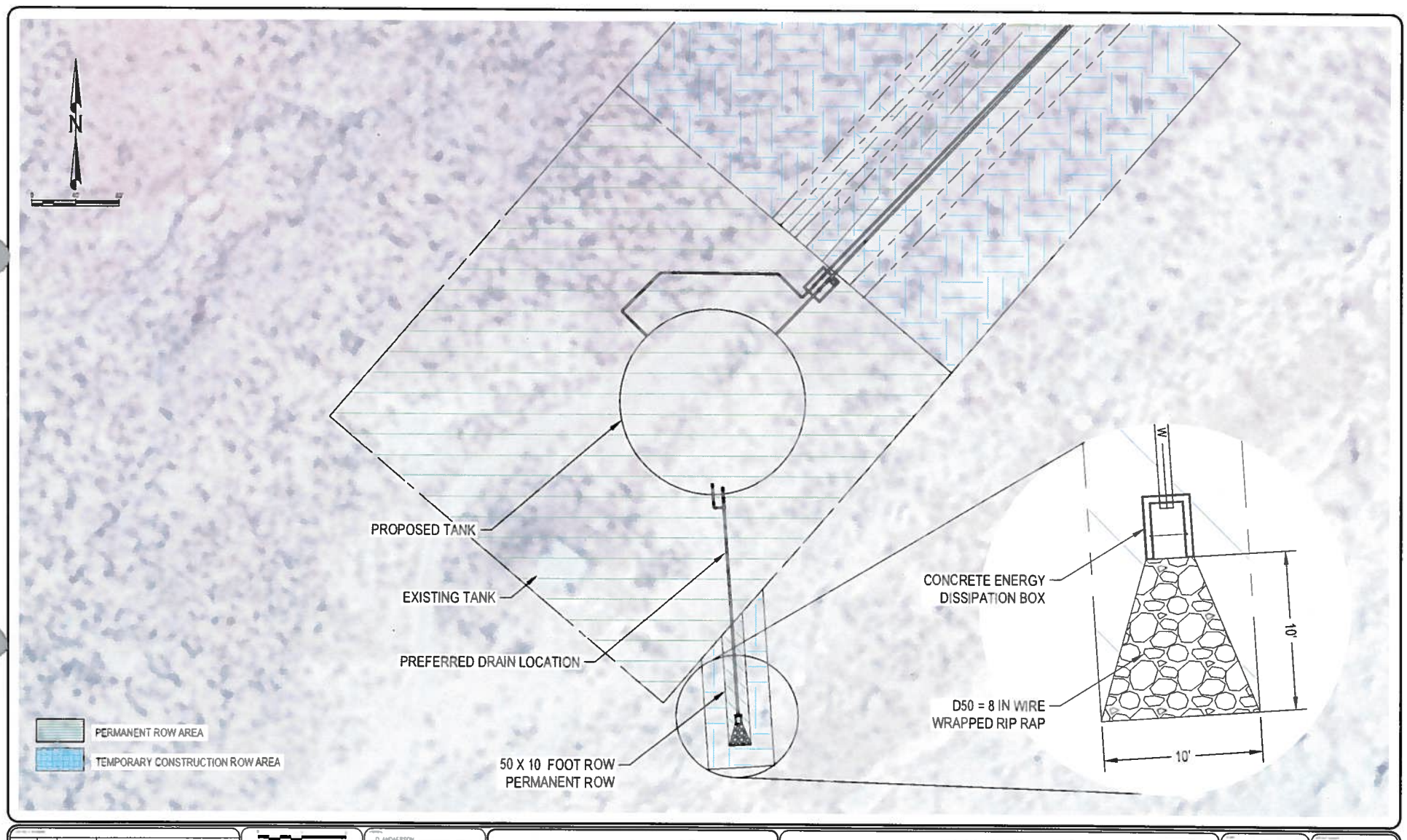

D. ANDAERSON
K. DESPAIN
B. WILLIAMS
C. ALLEN
AS INDICATED
03-30-15

CALDWELL RICHARDS SORENSEN
ANSWERS TO INFRASTRUCTURE

Vernal Office:
2020 NE 500 NORTH
VERNAL, UTAH 84078
Phone 435 781 2550

OURAY PARK WATER IMPROVEMENT DISTRICT
OURAY PARK WATERLINE IMPROVEMENT PROJECT
TANK DRAIN LOCATION

UINTAH COUNTY UTAH

14080V

EXHIBIT A

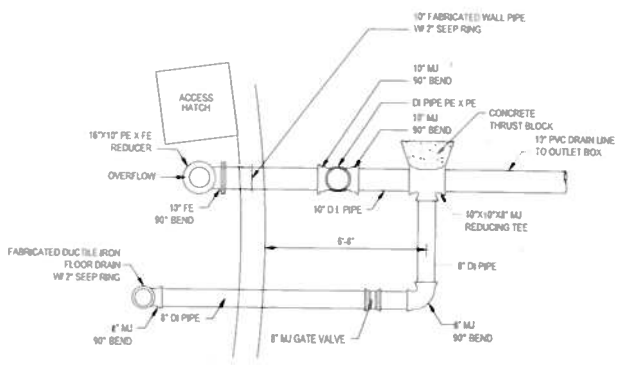

PLAN VIEW

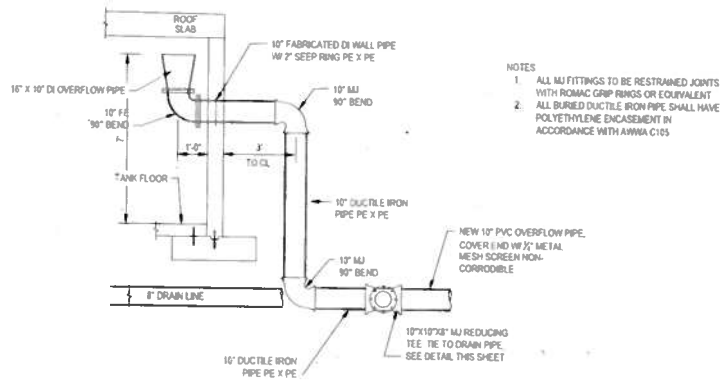

ELEVATION VIEW

NOTES
1. ALL MJ FITTINGS TO BE RESTRAINED JOINTS WITH ROMAC GRIP RINGS OR EQUIVALENT
2. ALL BURIED DUCTILE IRON PIPE SHALL HAVE POLYETHYLENE ENCASEMENT IN ACCORDANCE WITH AWWA C105

OVERFLOW & DRAIN DETAIL
SCALE NTS

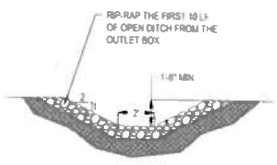

DRAINAGE CHANNEL DETAIL
SCALE NTS

NOTE:
DRAIN AND OVERFLOW PIPES ARE TO HAVE A MINIMUM SLOPE OF 1% TO OUTLET DRAIN BOX.

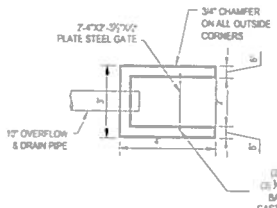

TOP VIEW

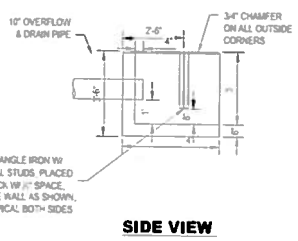

SIDE VIEW

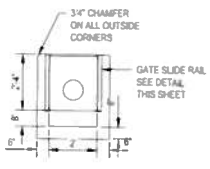

FRONT VIEW

NOTES
COVER END OF OVERFLOW DRAIN PIPE W/ ½" METAL MESH SCREEN, NON-CORRODIBLE

REINFORCE W/ #4 REBAR AT 6" TO 8" O.C. B.W.

THE FLOOR OF THE OUTLET BOX SHALL BE A MIN. OF 12 INCHES HIGHER THAN THE RIP-RAP IMMEDIATELY FOLLOWING THE BOX.

OUTLET BOX DETAIL
SCALE NTS

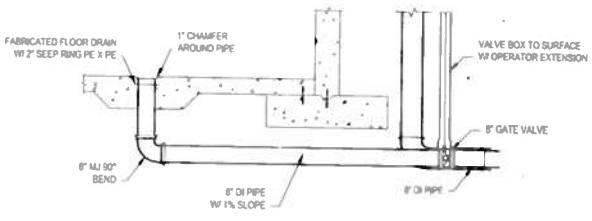

DRAIN PIPE
SCALE NTS

8" = 6" HEIGHT SCALE BAR DOES NOT MEASURE 1-INCH IN LENGTH. DO NOT USE THIS DRAWING FOR SCALING PURPOSES. DIMENSIONS AND MEASUREMENTS SPECIFIED ON THE DRAWING ARE PRECEDENCE NOT TO SCALE ON MEASUREMENTS.
THE PROPERTY OF CRS ENGINEERS MUST NOT BE REPRODUCED, MODIFIED OR USED FOR ANY OTHER PROJECT OR BY ANYONE OTHER THAN CRS ENGINEERS
© 2010

D. ANDERSON
R. DESPAIN
C. NEBEKER
B. FELIX
NOT
13 09/14

CALDWELL RICHARDS SORENSEN
ANSWERS TO INFRASTRUCTURE

Vernal Office:
2023 WEST 500 NORTH
VERNAL, UT 84078
PHONE: 435 . 781 . 2550
www.crengineers.com

OURAY PARK WATER IMPROVEMENT DISTRICT
250,000 GALLON WATER TANK
PIPING DETAILS

14080V
7 8
C501

Ouray Park Water Improvement District
Waterline and Tank Project

26 October 2015

DESCRIPTION OF TANK DRAIN SYSTEM

The tank drain will have several methods to prevent erosion should the tank ever need to be drained. First, a valve on the drain line can be adjusted to control the rate of flow from the tank. Second, a concrete structure will be built with an energy-dissipating baffle. The water flowing from the tank will hit the baffle and slow down. The water will then flow under the baffle to the discharge side of the concrete structure. As water leaves the structure, it will travel in an armored channel for ten feet before entering the natural drainage.

The new tank drain will discharge to the same location as the existing tank drain to minimize impacts to the environment. The drain valve, the energy dissipation structure and the armored channel out of the new tank will protect against erosion to the natural drainage. These three measures will reduce water velocities and ensure water is released at an appropriate rate.

The maximum discharge from the tank would occur under extremely unlikely conditions. First, the tank would need to be completely full. Second, the drain valve would need to be completely opened. Once that happened, the discharge would decrease as the water level in the tank decreased. In reality, if the tank were to be drained, the water district would allow the tank to be drained by system usage while the filling pumps were turned off. If the tank drain valve were to be opened, the tank level would be one or two feet. The following chart shows the maximum discharge from the tank compared to the depth of water in the tank.

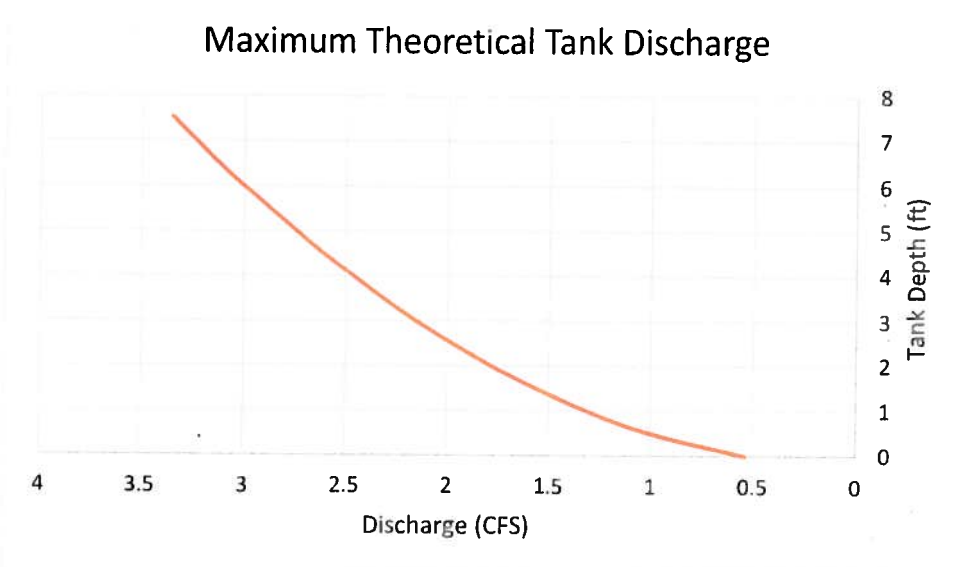

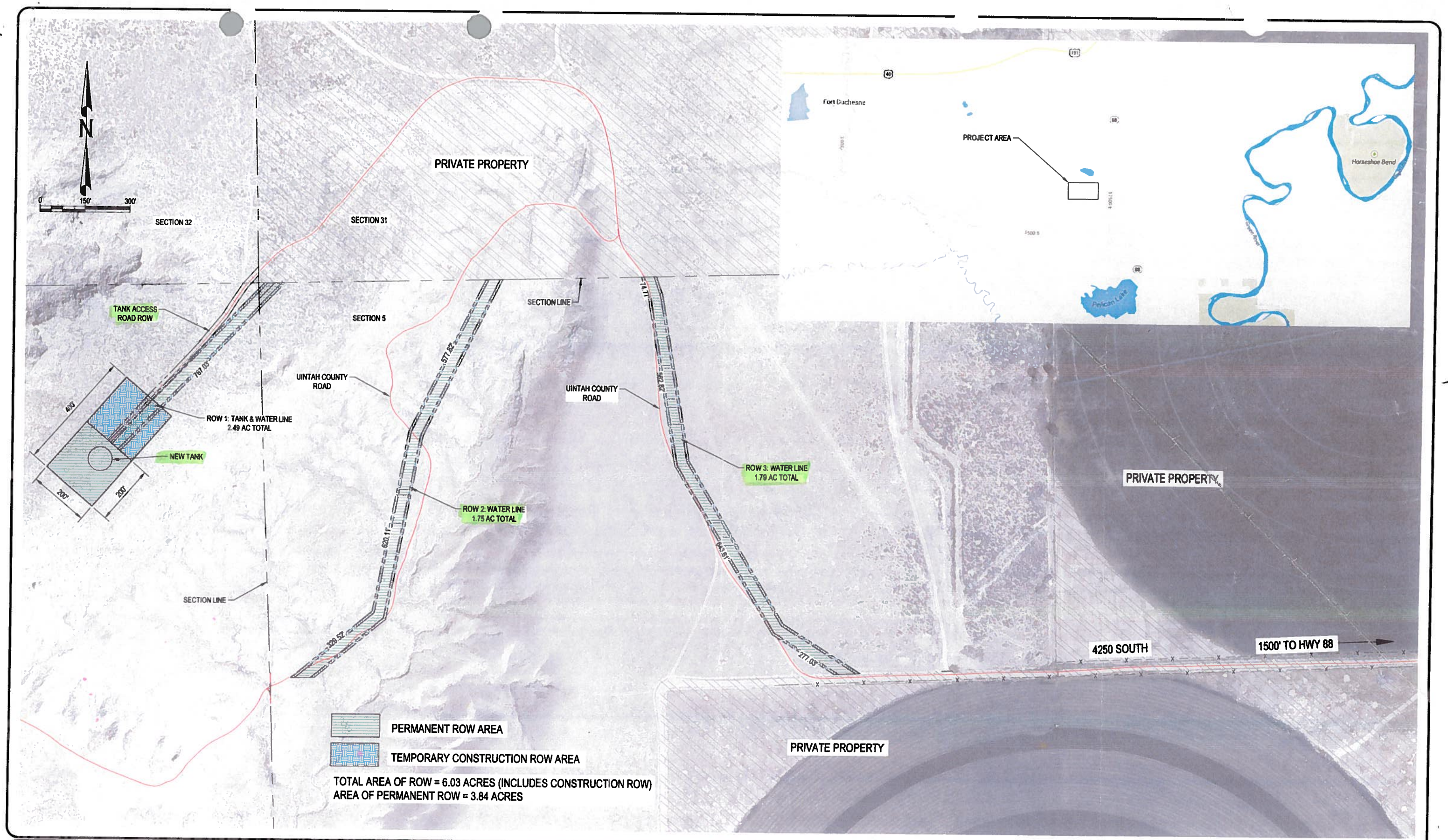

RECORD OF REVISIONS

0 1 2

IF THE ABOVE SCALE BAR DOES NOT MEASURE 1-INCH IN LENGTH, DO NOT USE THIS DRAWING FOR SCALING PURPOSES. DIMENSIONS AND MEASUREMENTS SPECIFIED IN THE DRAWING TAKE PRECEDENCE TO SCALED MEASUREMENTS.

THE INFORMATION CONTAINED IN THIS DRAWING IS THE PROPERTY OF CRS ENGINEERS AND IS NOT TO BE REPRODUCED, MODIFIED OR USED FOR ANY OTHER PROJECT OR EXTENSION OF THIS PROJECT EXCEPT BY AGREEMENT WITH CRS ENGINEERS
© 2010

PREPARED BY: D. ANDAERSON
PROJECT MANAGER: K. DESPAIN
CHECKED BY: K. DESPAIN
DRAWN BY: C. ALLEN
DRAWING SCALE: AS INDICATED
ISSUE DATE: 03-30-15

CALDWELL RICHARDS SORENSEN
ANSWERS TO INFRASTRUCTURE
CRS

Vernal OFFICE:
2028 WEST 500 NORTH
VERNAL, UTAH 84078
PHONE: 435 .781 .2550
www.crsengineers.com

OURAY PARK WATER IMPROVEMENT DISTRICT

OURAY PARK WATERLINE IMPROVEMENT PROJECT

BLM ROW EXHIBIT

UINTAH COUNTY UTAH

STAMP

PROJECT NUMBER: 14080V
SHEET 1 OF 1
SHEET NUMBER: EXHIBIT 1