United States Department of the Interior
Bureau of Land Management

Categorical Exclusion DOI-BLM-MT-C020-2016-0033-CX
November 3, 2015

Moorhead Road R/W
MTM-108475
&
Short Term Use R/W
MTM-108475-01

Location: **Powder River County, Montana**
T. 5 S., R. 51 E., Sec. 18, NE¼NW¼, NW¼NE¼ ;
T. 5 S., R. 50 E., Sec. 23, Lots 3, 6, 7;
Sec. 26, NW¼NE¼, SE¼NW¼;
Sec. 34, E½;
T. 6 S., R. 50 E., Sec. 20, NE¼NE¼, SE¼NW¼;
Sec. 29, SW¼NW¼;
T. 7 S., R. 49 E., Sec. 30, Lot 5;
T. 8 S., R. 48 E., Sec. 28, Lot 20;
Sec. 29, Lot 14;
Sec. 32, SW¼SE¼;
T. 9 S., R. 48 E., Sec. 18, Lots 1, 2, SE¼NE¼, NW¼SE¼, SW¼NE¼;
Sec. 19, Lot 1;
Sec. 20, NW¼NW¼, SW¼NW¼, SE¼NW¼, NW¼SW¼;
Sec. 30, Lot 3, NW¼NE¼, SW¼NE¼,SE¼NW¼,NE¼SW¼;
Sec. 31, Lot 3.

U.S. Department of the Interior
Bureau of Land Management
Miles City Field Office
111 Garryowen Road
Miles City, MT 59301
Phone: 406-233-2800
FAX: 406-233-2921

UNITED STATES DEPARTMENT OF INTERIOR
BUREAU OF LAND MANAGEMENT
Miles City Field Office
111 Garryowen Road
Miles City, Montana 59301

CATEGORICAL EXCLUSION REVIEW AND APPROVAL

A. Background

BLM Office: Miles City Field Office Serial/Case File No.: MTM-108475
MTM_108475-01

NEPA Number (if applicable): DOI-BLM-MT-C020-2016-0033-CX

Proposed Action Title/Type: Moorhead County Road ROW MTM-108475 and Short Term Use ROW MTM-108475-01

Location of Proposed Action (w/county):
Powder River County, Montana, PMM (see Exhibit 1)

Background: The Moorhead Road is an existing graveled road and was declared a county road in 2011.

Description of Proposed Action:
The proposed action is to issue a Title V FLPMA right-of-way (ROW) to Powder River County to operate, maintain, and terminate within a 100-foot right-of-way for the existing graveled Moorhead Road (serial number MTM-108475) across federal, BLM administered land. The Moorhead Road starts at US Highway 212 S (Broadus) and extends southwest for 42 miles to the Wyoming State line. The road crosses several BLM parcels in the following locations (see attached map, exhibit 1):

Powder River County, Montana, PMM
T. 5 S., R. 51 E., Sec. 18, NE¼NW¼, NW¼NE¼ ;
T. 5 S., R. 50 E., Sec. 23, Lots 3, 6, 7;
Sec. 26, NW¼NE¼, SE¼NW¼;
Sec. 34, E½;
T. 6 S., R. 50 E., Sec. 20, NE¼NE¼, SE¼NW¼;
Sec. 29, SW¼NW¼;
T. 7 S., R. 49 E., Sec. 30, Lot 5;
T. 8 S., R. 48 E., Sec. 28, Lot 20;
Sec. 29, Lot 14;
Sec. 32, SW¼SE¼;
T. 9 S., R. 48 E., Sec. 18, Lots 1, 2, SE¼NE¼, NW¼SE¼, SW¼NE¼;
Sec. 19, Lot 1;
Sec. 20, NW¼NW¼, SW¼NW¼, SE¼NW¼, NW¼SW¼;

Sec. 30, Lot 3, NW¼NE¼,
SW¼NE¼,SE¼NW¼,NE¼SW¼;
Sec. 31, Lot 3.

The Moorhead Road ROW (MTM-108475) would be approximately 34,058 feet long and 100 feet wide, consisting of 78.18 acres, more or less. The county has requested the width of the ROW in Lots 1 and 2 of Sec. 18, T. 9S., R48E., to be 200 feet to allow for routine maintenance along the Moorhead Bridge and river bank. The length of the 200-ft width ROW would extend 100 ft north of the bridge to 400 ft south of the bridge. This Fall the county is proposing placing rip-rap along the bank to protect the bridge.

Additionally, Powder River County has requested a short term use grant (MTM-108475-01) for extra workspace and staging area that would be needed when the rip-rap placement takes place (see Exhibit 1 & 2). The short term use grant would be located in Lot 2, Sec. 18, T. 9S., R48E., the area will be 300 ft by 200 ft, consisting of 1.38 acres, more or less. The short term use grant would be issued until December 31, 2016.

The existing road would be maintained and reconstructed if necessary within the 100 foot right-of-way; any work outside the 100 foot right-of-way (200 foot in the specific location) would require an amended or new right-of-way grant. No hazardous material would be used, produced, or stored in connection with the proposed right-of-way.

The standard stipulations for cultural and/or paleontological resource protection and hazardous materials stipulation would be made a part of the ROW grant, as would the standard Civil Rights stipulation and standard stipulation that all activities associated with the ROW would be conducted within the authorized limits of the grant. Fences, gates, culverts, cattleguards, and brace panels shall be reconstructed, if necessary, to appropriate Bureau standards and/or specifications as determined by the authorized officer and all operation, maintenance, reconstruction, design, material, and termination practices shall be in accordance with safe and proven engineering practices. The applicant would be responsible for weed control on disturbed areas within the limits of the ROW and for coordinating with parties holding authorized rights on the adjacent and affected lands [such as the grazing permittee/lessee and other ROW holders]. Ninety days prior to termination of the right-of-way, the holder shall contact the authorized officer to arrange a joint inspection of the right-of-way and to agree on an acceptable termination (and rehabilitation) plan. The ROW would be granted pursuant to Title V of the Federal Land Policy and Management Act of October 21, 1976 (90Stat. 2776; 43 U.S.C. 1761) and be subject to the terms and conditions in 43 CFR 2800 and to the attached stipulations. Prairie County is exempt from paying processing and monitoring fees, and rental as provided for by regulations found at 43 CFR 2804.16 and 2806.14, respectively. The ROW will be monitored for use and before renewal or closure.

B. Land Use Plan Conformance

Land Use Plan Name: BLM 2015 Miles City Resource Management Plan

Date Approved/Amended: Approved September 21, 2015

The proposed action is in conformance with the applicable LUPs because it is specifically provided for in the following LUPs decision(s):

This proposed action is in conformance with the BLM 2015 Miles City Resource Management Plan (ARMP) which was approved in September, 2015. On page 3-8 of the ARMP, it states; "On the remaining surface acres in the planning area, Major ROWs are allowed on 445,170 surface acres (16%) and Minor ROWs are allowed on 1,809,798 surface acres (66%)." The proposed action has been reviewed for conformance with this plan and its terms and conditions as required by 43 CFR 1610.5.

C: Compliance with NEPA:

The Proposed Action is categorically excluded from further documentation under the National Environmental Policy Act (NEPA) in accordance with 516 DM 11.9E (16) for "Acquisition of easements for an existing road or issuance of leases, permits, or rights-of-way for the use of existing facilities, improvements, or site for the same or similar purposes."

This categorical exclusion is appropriate in this situation because there are no extraordinary circumstances potentially having effects that may significantly affect the environment. The proposed action has been reviewed, and, as documented below, none of the extraordinary circumstances described in 516 DM2 apply.

Extraordinary Circumstances		
The project would:		
1. Have significant impacts on public health or safety.		
Yes	**No**	**Rationale:** *The project would not have significant impacts on public health and safety as this is an existing public road which is being put under a Title V FLPMA Right-of-Way.* ***BKK 11/3/2015***
	X	
2. Have significant impacts on such natural resources and unique geographic characteristics as historic or cultural resources; park, recreation or refuge lands; wilderness areas; wild or scenic rivers; national natural landmarks; sole or principal drinking water aquifers; prime farmlands; wetlands (Executive Order 11990); floodplains (Executive Order 11988); national monuments; migratory birds; and other ecologically significant or critical areas.		
Yes	**No**	**Rationale:** *Impacts would not be significant as the proposed action is to authorize an existing road under a Title V FLPMA right-of-way.* ***BKK 11/3/2015***
	X	
3. Have highly controversial environmental effects or involve unresolved conflicts concerning alternative uses of available resources [NEPA section 102 (2) (E)].		
Yes	**No**	**Rationale:** *No controversial environmental effects or unresolved conflicts.* ***BKK 11/3/2015***
	X	

4. Have highly uncertain and potentially significant environmental effects or involve unique or unknown environmental risks.		
Yes	**No** **X**	**Rationale:** *No highly uncertain and potentially significant environmental effects or unique or unknown environmental risks.* ***BKK 11/3/2015***
5. Establish a precedent for future action or represent a decision in principal about future actions with potentially significant environmental effects.		
Yes	**No** **X**	**Rationale:** *This action is not connected to another action that would require further environmental analysis nor will it set a precedent for future actions that would normally require environmental analysis* ***BKK 11/3/2015***
6. Have a direct relationship to other actions with individually insignificant but cumulatively significant environmental effects.		
Yes	**No** **X**	**Rationale:** *This action does not have a direct relationship to other actions with individually insignificant but cumulatively significant environmental effects. See CFR 1508.7.* ***BKK 11/3/2015***
7. Have significant impacts on properties listed, or eligible for listing, on the National Register of Historic Places as determined by either the bureau or office.		
Yes	**No** **X**	**Rationale:** *Confirm that cultural surveys have been completed; the appropriate data bases have been reviewed; and appropriate concurrence from SHPO and tribes have been received indicating that significant impacts are not expected.* ***JGH 11/6/2015***
8. Have significant impacts on species listed, or proposed to be listed, on the List of Endangered or Threatened Species, or have significant impacts on designated Critical Habitat for these species.		
Yes	**No** **X**	**Rationale:** T&E species habitat does not exist within these areas. ***BKK 11/3/2015 KU 11/3/2015***
9. Violate a Federal law, or a State, local or tribal law or requirement imposed for the protection of the environment.		
Yes	**No** **X**	**Rationale*:*** *No laws are being violated by this action.* ***BKK 11/3/2015***
10. Have a disproportionately high and adverse effect on low income or minority populations (Executive Order 12898).		
Yes	**No** **X**	**Rationale:** *Does not have a disproportionately high and adverse effect on low income or minority populations.* ***BKK 11/3/2015***
11. Limit access to and ceremonial use of Indian sacred sites on Federal lands by Indian religious practitioners or significantly adversely affect the physical integrity of such sacred sites (Executive Order 13007).		
Yes	**No** **X**	**Rationale:** *Consultation with tribes regarding Indian sacred sites must take place.* ***JGH 11/6/2015***
12. Contribute to the introduction, continued existence, or spread of noxious weeds or non-native invasive species known to occur in the area or actions that may promote the introduction, growth, or expansion of the range of such species (Federal Noxious Weed Control Act and Executive Order 13112).		

Yes	No	
	X	**Rationale:** *The proposed action will not contribute to the introduction or spread of noxious weeds as an existing road is being authorized under a Title V FLPMA right-of-way. Further, under the authorization the applicant is responsible for weed control within the authorized area.* ***BKK 11/3/2015***

/s/ John Brumbach 11/10/2015
Engineer Date

/s/ Christopher Morris 11/10/2015
Supervisory Division of Non-Renewable Resources Date

/s/ Kathy Bockness 11/10/2015
Environmental Coordinator Date

Decision Record for Categorical Exclusion
Moorhead Road Right-of-Way MTM-108475, Short Term Use Right-of-Way MTM-108475-01
DOI-BLM-MT-C020-2016-0033-CX

Decision: I have made the decision to issue a Title V FLPMA right-of-way (ROW) to Powder River County to operate, maintain, and terminate within a 100-foot right-of-way for the existing graveled Moorhead Road (serial number MTM-108475) across federal, BLM administered land. The Moorhead Road starts at US Highway 212 S (Broadus) and extends southwest for 42 miles to the Wyoming State line. The road crosses several BLM parcels in the following locations (see attached map);

Powder River County, Montana, PMM

T. 5 S., R. 51 E., Sec. 18, NE¼NW¼, NW¼NE¼ ;
T. 5 S., R. 50 E., Sec. 23, Lots 3, 6, 7;
Sec. 26, NW¼NE¼, SE¼NW¼;
Sec. 34, E½;
T. 6 S., R. 50 E., Sec. 20, NE¼NE¼, SE¼NW¼;
Sec. 29, SW¼NW¼;
T. 7 S., R. 49 E., Sec. 30, Lot 5;
T. 8 S., R. 48 E., Sec. 28, Lot 20;
Sec. 29, Lot 14;
Sec. 32, SW¼SE¼;
T. 9 S., R. 48 E., Sec. 18, Lots 1, 2, SE¼NE¼, NW¼SE¼, SW¼NE¼ ;
Sec. 19, Lot 1;
Sec. 20, NW¼NW¼, SW¼NW¼, SE¼NW¼, NW¼SW¼;
Sec. 30, Lot 3, NW¼NE¼,
SW¼NE¼,SE¼NW¼,NE¼SW¼;
Sec. 31, Lot 3.

The Moorhead Road ROW (MTM-108475) would be approximately 34,058 feet long and 100 feet wide, consisting of 78.18 acres, more or less. The county has requested the width of the ROW in Lots 1 and 2 of Sec. 18, T. 9S., R48E., to be 200 feet to allow for routine maintenance along the Moorhead Bridge and river bank. The length of the 200-ft width ROW will extend 100 ft north of the bridge to 400 ft south of the bridge. This Fall the county is proposing placing rip-rap along the bank to protect the bridge.

Additionally, a short term use grant would (108475-01) be issued to Powder River County t for extra workspace and staging area that will be needed when the rip-rap placement takes place. The short term use grant would be located in Lot 2, Sec. 18, T. 9S., R48E., the area will be 300x200 ft, consisting of 1.38 acres, more or less. The short term use grant would be issued until December 31, 2016.

Rational for Decision: The proposed action meets the criteria for a categorical exclusion under 516 DM 11.9E (16), and none of the exceptions in 516 DM 2 apply. Further the action is in conformance BLM 2015 Miles City Resource Management Plan which was approved on

September 21, 2015.

I considered the proposed action and associated stipulations which will be included in the right-of-way and which are attached below. There is no potential for significant impacts. Use of this CX is appropriate and I have decided to implement this action.

D: Signature

/s/ Eric D. Lepisto November 10, 2015
Signature of Authorizing Official Date

Name: Eric D. Lepisto .

Title: Acting Field Manager

Contact Person

For additional information concerning this CX review and decision, contact:

Beth Klempel, Realty Specialist (406-233-2896)
BLM – Miles City Field Office
111 Garryowen Road
Miles City, Montana 59301

Administrative Review or Appeal Opportunities

A BLM decision to issue a ROW may be appealed under regulations 43CFR 2881.10 in accordance with part 4 of 43 CFR. A BLM decision affecting a ROW application carries the "full force and effect" of the decision. Under full force and effect the decision can be implemented immediately even if the decision is appealed to the IBLA. An affected party has the opportunity to file a petition for a stay with an appeal to the IBLA. The decision to issue a ROW in full force and effect requires information on petitions for stay to be included with the decision notification. The decision may be appealed to the Interior Board of Land Appeals, Office of the Secretary, in accordance with the regulations contained in 43 CFR, Part 4 and information on BLM Form 1842-1. If an appeal is taken, the notice of appeal must be filed in the Miles City Field Office at 111 Garryowen Road, Miles City, Montana 59301 within 30 days from receipt of the decision issuing the decision. The appellant has the burden of showing that the decision appealed from is in error.

If a petition (request) is filed pursuant to regulation 43 CFR 2881.10 for a stay (suspension) of the effectiveness of the decision during the time that the appeal is being reviewed by the Board, the petition for a stay must accompany the notice of appeal. A petition for a stay is required to show sufficient justification based on the standards listed below. Copies of the notice of appeal and petition for a stay must also be submitted to each party named in the decision and to the Interior Board of Land Appeals and to the appropriate Office of the Solicitor (see 43 CFR 4.413)

at the same time the original documents are filed with the Miles City Field Office. If a stay is requested, the requester has the burden of proof to demonstrate that a stay should be granted.

Standards for Obtaining a Stay

Except as otherwise provided by law or other pertinent regulation, a petition for a stay of a decision pending appeal shall show sufficient justification based on the following standards:

(1) The relative harm to the parties if the stay is granted or denied,

(2) The likelihood of the appellant's success on the merits,

(3) The likelihood of immediate and irreparable harm if the stay is not granted, and

(4) Whether the public interest favors granting the stay.

Exhibit 1: Map

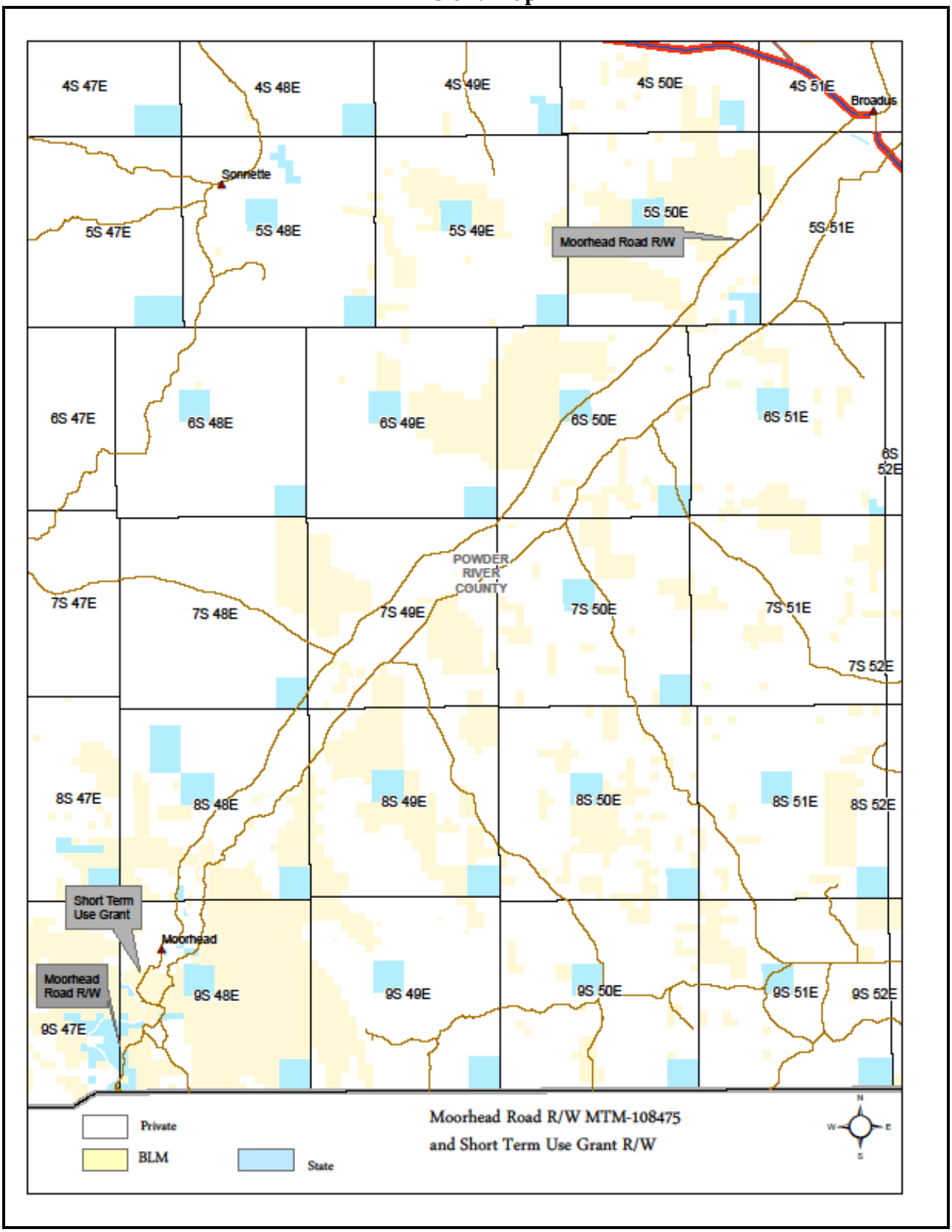

Exhibit 2: Aerial with Rip-Rap Placement

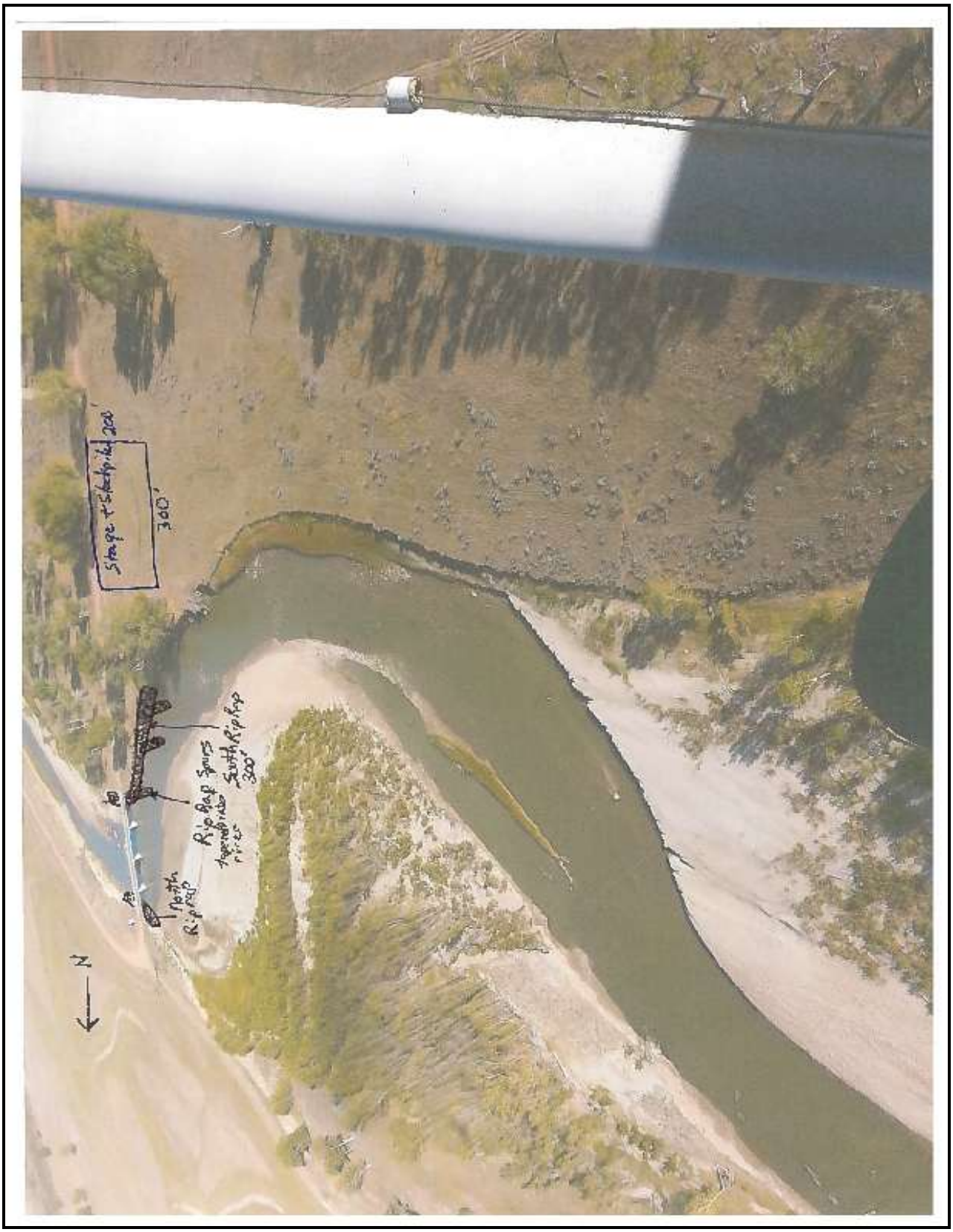

Exhibit 3: Construction Drawings

Construction Notes:

1. Rip-rap shall have a gradation from 6 to 48 inch and placed to reduce voids.
2. Rip-rap shall be placed on a uniform compacted base at a consistent slope.
3. A temporary dam may be constructed to de-water the site prior to construction.
4. Some fill material may be needed to construct the slope to achieve a 1.5H:1V(or flatter) rock slope. The material will be borrowed from adjacent road borrow ditch that have filled in.
5. A Keyway that is a minimum of 3' deep below the toe of the slope shall be constructed for the entire length of the rip-rap.
6. Rip-rap shall be keyed into the bank 10' back from the rock face, 2' thick and to the top of rock to prevent the rock protection from being undermined by high flows.

Rip-Rap Gradation	
% Passing	Size Range In.
100	48in
85	18"-36
50	12-18
15	6-12

Mobilhead Estimated Quantities		
ITEM	UNIT	QUANTITY
RIP-RAP	CU. YDS.	350
GRANULAR FILL	CU. YDS.	130

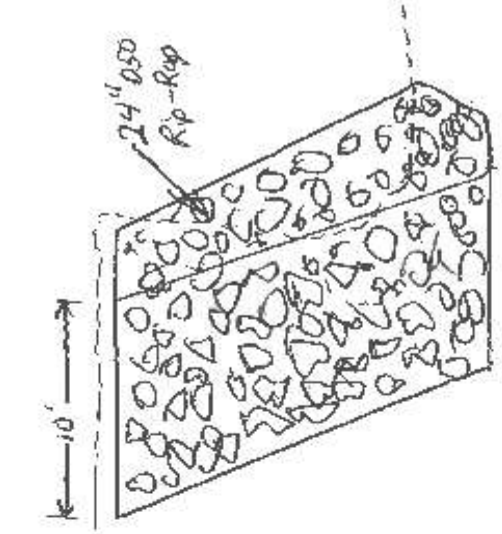

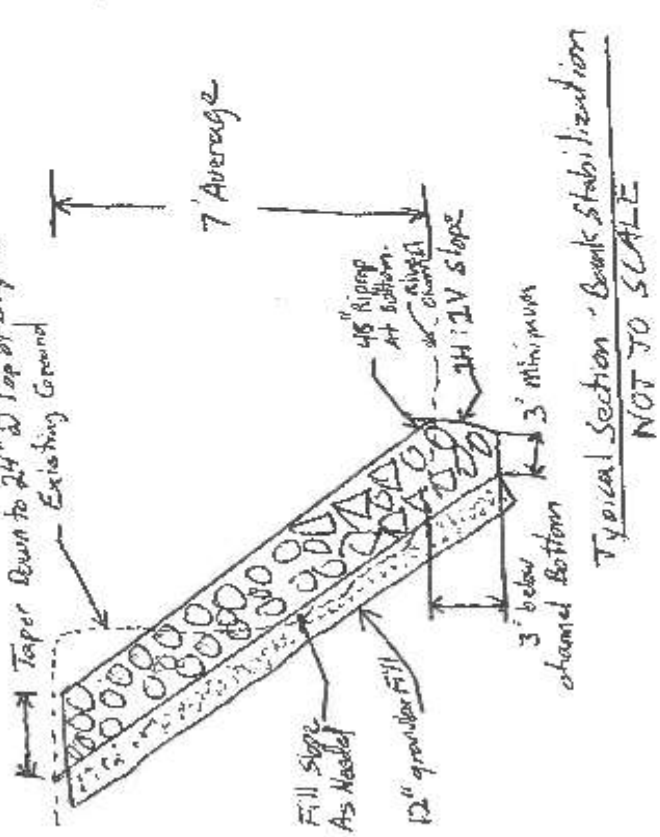

Drawn By: Ty Lee Elsinore River Conservation Service Supervisor) Date 10/23/08

STIPULATIONS:

1. Any cultural and/or paleontological resource (historic or prehistoric site or object) discovered by the holder, or any person working on his behalf, on public or Federal land shall be immediately reported to the authorized officer. Holder shall suspend all operations in the immediate area of such discovery until written authorization to proceed is issued by the authorized officer. An evaluation of the discovery will be made by the authorized officer to determine appropriate actions to prevent the loss of significant cultural or scientific values. The holder will be responsible for the cost of evaluation and any decision as to proper mitigation measures will be made by the authorized officer after consulting with the holder.

1a. The holder shall contact the Miles City BLM Field Office prior to any ground disturbing activities occurring within 100 feet of the Reynolds Battlefield ACEC (24PR0089) boundary.

2. The holder shall be responsible for weed control on disturbed areas within the limits of the right-of-way. The holder is responsible for consultation with the authorized officer and/or local authorities for acceptable weed control methods (within limits imposed in the grant stipulations).

3. No construction or routine maintenance activities shall be performed during periods when the soil is too wet to adequately support construction equipment. If such equipment creates ruts in excess of four (4) inches deep, the soil shall be deemed too wet to adequately support construction equipment.

4. The holder shall conduct all activities associated with the construction, operation, maintenance, and termination of the right-of-way within the authorized limits of the right-of-way.

5. The holder(s) shall comply with all applicable Federal laws and regulations existing or hereafter enacted or promulgated. In any event, the holder(s) shall comply with the Toxic Substances Control Act of 1976, as amended (15 U.S.C. 2601, et. seq.) with regard to any toxic substances that are used, generated by or stored on the right-of-way or on facilities authorized under this right-of-way grant. (See 40 CFR, Part 702-799 and especially, provisions on polychlorinated biphenyls, 40 CFR 761.1-761.193.) Additionally, any release of toxic substances (leaks, spills, etc.) in excess of the reportable quantity established by 40 CFR, Part 117 shall be reported as required by the Comprehensive Environmental Response, Compensation and Liability Act of 1980, Section 102b. A copy of any report required or requested by any Federal agency or State government as a result of a reportable release or spill of any toxic substances shall be furnished to the authorized officer concurrent with the filing of the reports to the involved Federal agency or State government.

6. The holder shall coordinate with the parties holding authorized rights on the adjacent and affected lands.

7. This grant is issued subject to the holder's compliance with the mitigations set forth in

the application/plan of development.

8. In the event that the public land underlying the right-of-way (ROW) encompassed in this grant, or a portion thereof, is conveyed out of Federal ownership and administration of the ROW or the land underlying the ROW is not being reserved to the United States in the patent/deed and/or the ROW is not within a ROW corridor being reserved to the United States in the patent/deed, the United States waives any right it has to administer the right-of-way, or portion thereof, within the conveyed land under Federal laws, statutes, and regulations, including the regulations at 43 CFR Part 2800, including any rights to have the holder apply to BLM for amendments, modifications, or assignments and for BLM to approve or recognize such amendments, modifications, or assignments. At the time of conveyance, the patentee/grantee, and their successors and assigns, shall succeed to the interests of the United States in all matters relating to the right-of-way, or portion thereof, within the conveyed land and shall be subject to applicable State and local government laws, statutes, and ordinances. After conveyance, any disputes concerning compliance with the use and the terms and conditions of the ROW shall be considered a civil matter between the patentee/grantee and the ROW Holder.

9. All operation, maintenance, reconstruction, design, material, and termination practices shall be in accordance with safe and proven engineering practices as stated in BLM Manual 9113- Road Standards http://www.blm.gov/pgdata/etc/medialib/blm/mt/blm_programs/energy/oil_and_gas/operations/gold_book.Par.10040.File.dat/9113.pdf and in accordance with the "Gold Book" http://www.blm.gov/wo/st/en/prog/energy/oil_and_gas/best_management_practices/gold_book.html requirements for roads.

10. The holder shall seed all disturbed areas with the seed mixture listed below. The seed mixture shall be planted in the amounts specified in pounds of pure live seed (PLS)/acre. There shall be no primary or secondary noxious weed seed in the seed mixture. Seed shall be tested and the viability testing of seed shall be done in accordance with State law(s) and within six months prior to purchase. Commercial seed shall be either certified or registered seed. The seed mixture container shall be tagged in accordance with State law(s) and available for inspection by the authorized officer.

Seed shall be planted using a drill equipped with a depth regulator to ensure proper depth of planting where drilling is possible. The seed mixture shall be evenly and uniformly planted over the disturbed area. (Smaller/heavier seeds have a tendency to drop to the bottom of the drill and are planted first. The holder shall take appropriate measures to insure this does not occur.) Where drilling is not possible, seed shall be broadcast and the area shall be raked or chained to cover the seed. When broadcasting the seed, the pounds per acre noted below are to be doubled. The seeding will be repeated until a satisfactory stand is established as determined by the authorized officer. Evaluation of growth will not be made before completion of the second growing season after seeding. The authorized officer is to be notified a minimum of seven (7) days prior to seeding of the project.

Seed Mixture (clayey) - Western wheatgrass must be included in the mix. Thickspike wheatgrass may be substituted only when western wheatgrass is unavailable. The combination for the seed mixture must include at least four of the following species including Western wheatgrass:

Species of Seed	***(Variety)***	***Common Name***	***Pounds/acre *(PLS)***
Pascopyrum smithii	(Rosanna)	Western wheatgrass	3.00
Pseudoroegneria spicata	(Goldar)	Bluebunch wheatgrass	2.00
Stipa viridula	(Lodom)	Green needlegrass	2.00
Elymus trachycaulus	(Pryor)	Slender wheatgrass	2.00
Stipa comata		Needleandthread	1.00
Bouteloua curtipendula		Sideoats Grama	2.00
Schizachyrium scoparium		Little bluestem	2.00

*******Pure Live Seed (PLS) formula: % of purity of seed mixture times % germination of seed mixture = portion of seed mixture that is PLS.*