Exhibit M3
Visual Simulations

Existing Condition – View looking south from the Cedar Mountain Overlook toward the San Rafael Swell, Buckhorn Flat, and the Old Spanish NHT with an existing 345kV transmission line crossing BLM VRM Class III lands

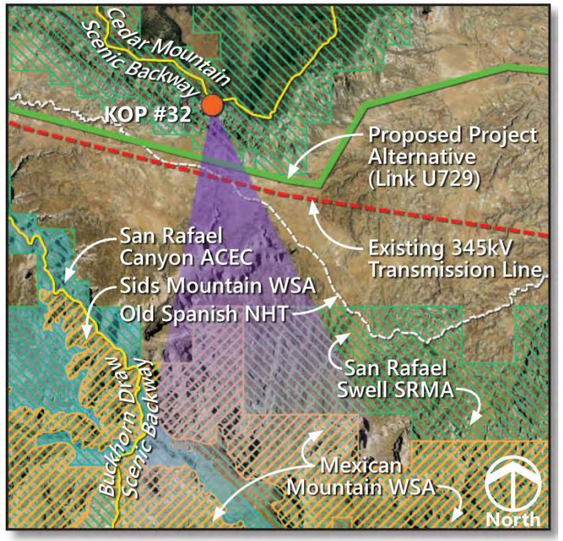

View Location: Approximate distance to proposed transmission line from photo location is 1.0 mile.

Simulated Condition – View of Alternative COUT BAX-B

500kV TOWER STRUCTURE DIAGRAM

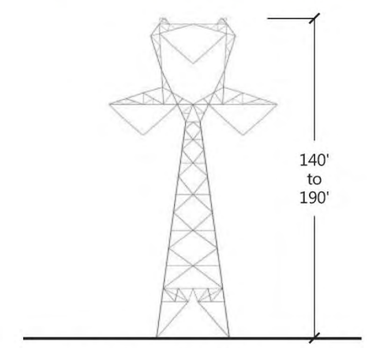

Typical single-circuit 500kV dull-galvanized self-supporting lattice tangent transmission tower

Tower heights shown in simulation vary between 160' and 180'

Final EIS and Proposed LUPAs for the Energy Gateway South Transmission Project

KOP #32a – Cedar Mountain Overlook

Photo Date and Time: July 26, 2012, 8:25 a.m. Focal Length: 50mm
The above simulation is intended to be viewed 16 inches from viewer's eyes when printed on 11x17 paper.

Simulations were prepared using three-dimensional tower models and information provided by Rocky Mountain Power. Typical towers would range between 140 to 190 feet above ground with a span of 1,200 feet. Tower locations and heights may differ based on final engineering and design.

Existing Condition – View looking south from the Cedar Mountain Overlook toward the San Rafael Swell, Buckhorn Flat, and the Old Spanish NHT with an existing 345kV transmission line crossing BLM VRM Class III lands

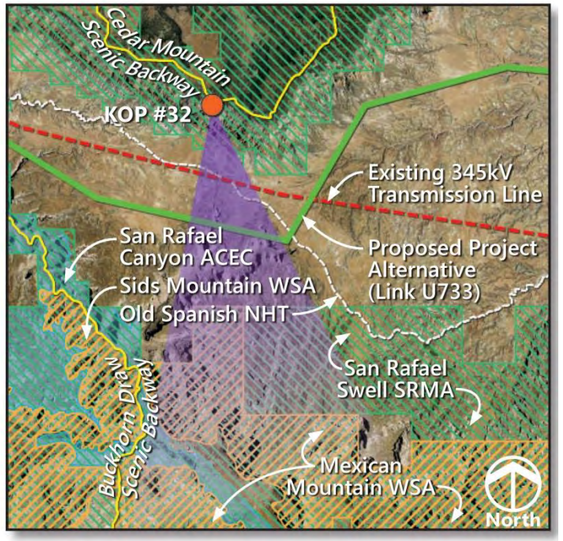

View Location: Approximate distance to proposed transmission line from photo location is 2.2 miles.

Simulated Condition – View of Alternative COUT BAX-C

500kV TOWER STRUCTURE DIAGRAM

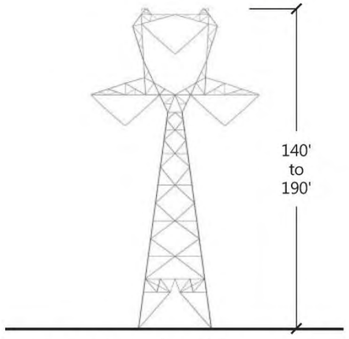

Typical single-circuit 500kV dull-galvanized self-supporting lattice tangent transmission tower

Tower heights shown in simulation vary between 160' and 180'

Final EIS and Proposed LUPAs for the Energy Gateway South Transmission Project

KOP #32b – Cedar Mountain Overlook

Photo Date and Time: July 26, 2012, 8:25 a.m. Focal Length: 50mm
The above simulation is intended to be viewed 16 inches from viewer's eyes when printed on 11x17 paper.

Simulations were prepared using three-dimensional tower models and information provided by Rocky Mountain Power. Typical towers would range between 140 to 190 feet above ground with a span of 1,200 feet. Tower locations and heights may differ based on final engineering and design.

September 2015

Existing Condition – View looking south from the Cedar Mountain Overlook toward the San Rafael Swell, Buckhorn Flat, and the Old Spanish NHT with an existing 345kV transmission line crossing BLM VRM Class III lands

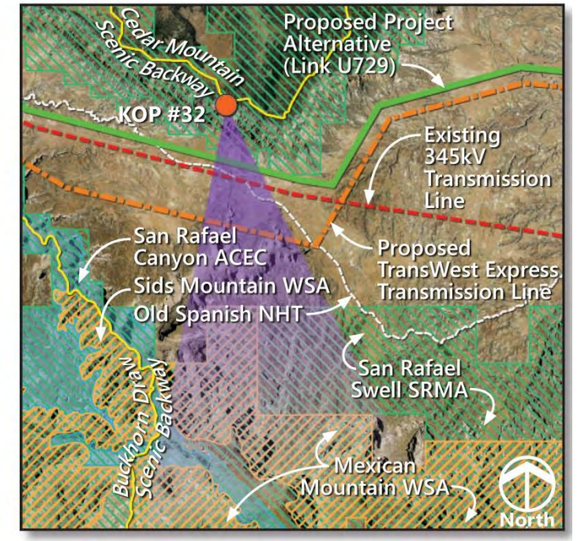

View Location: Approximate distance to proposed transmission line from photo location is 1.0 mile.

Simulated Condition – View of Alternative COUT BAX-B and the proposed TransWest Express transmission line

500kV TOWER STRUCTURE DIAGRAM

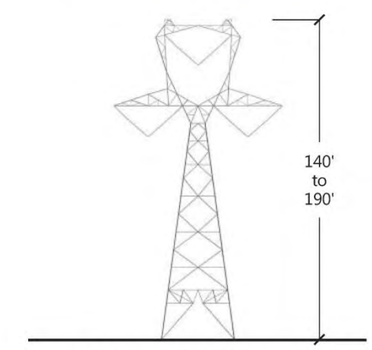

Typical single-circuit 500kV dull-galvanized self-supporting lattice tangent transmission tower

Tower heights shown in simulation vary between 160' and 180'

Photo Date and Time: July 26, 2012, 8:25 a.m. Focal Length: 50mm
The above simulation is intended to be viewed 16 inches from viewer's eyes when printed on 11x17 paper.

Energy Gateway South simulations were prepared using three-dimensional tower models and information provided by Rocky Mountain Power. Typical towers would range between 140 to 190 feet above ground with a span of 1,200 feet. Tower locations and heights may differ based on final engineering and design.

Cumulative effect simulations depicting the proposed TransWest Express project are conceptual and shown for reference only.

Final EIS and Proposed LUPAs for the Energy Gateway South Transmission Project

KOP #32a – Cedar Mountain Overlook
Cumulative Effects

September 2015

Existing Condition – View looking south from the Cedar Mountain Overlook toward the San Rafael Swell, Buckhorn Flat, and the Old Spanish NHT with an existing 345kV transmission line crossing BLM VRM Class III lands

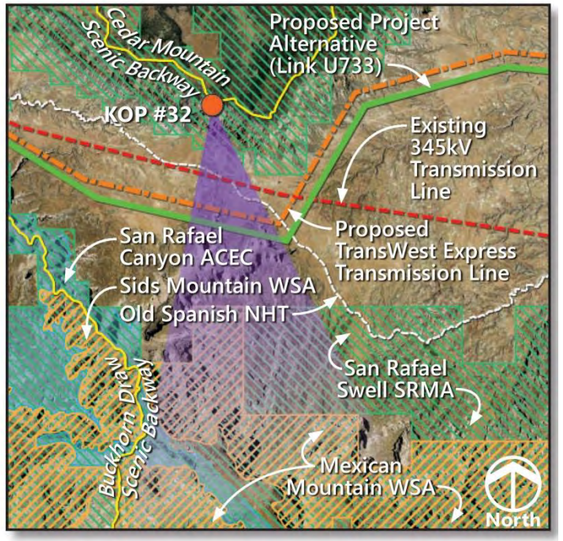

View Location: Approximate distance to proposed transmission line from photo location is 2.2 miles.

Simulated Condition – View of Alternative COUT BAX-C and the proposed TransWest Express transmission line

500kV TOWER STRUCTURE DIAGRAM

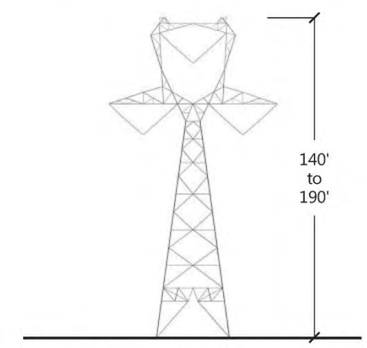

Typical single-circuit 500kV dull-galvanized self-supporting lattice tangent transmission tower

Tower heights shown in simulation vary between 160' and 180'

Photo Date and Time: July 26, 2012, 8:25 a.m. Focal Length: 50mm
The above simulation is intended to be viewed 16 inches from viewer's eyes when printed on 11x17 paper.

Energy Gateway South simulations were prepared using three-dimensional tower models and information provided by Rocky Mountain Power. Typical towers would range between 140 to 190 feet above ground with a span of 1,200 feet. Tower locations and heights may differ based on final engineering and design.

Cumulative effect simulations depicting the proposed TransWest Express project are conceptual and shown for reference only.

Final EIS and Proposed LUPAs for the Energy Gateway South Transmission Project

KOP #32b – Cedar Mountain Overlook
Cumulative Effects

September 2015

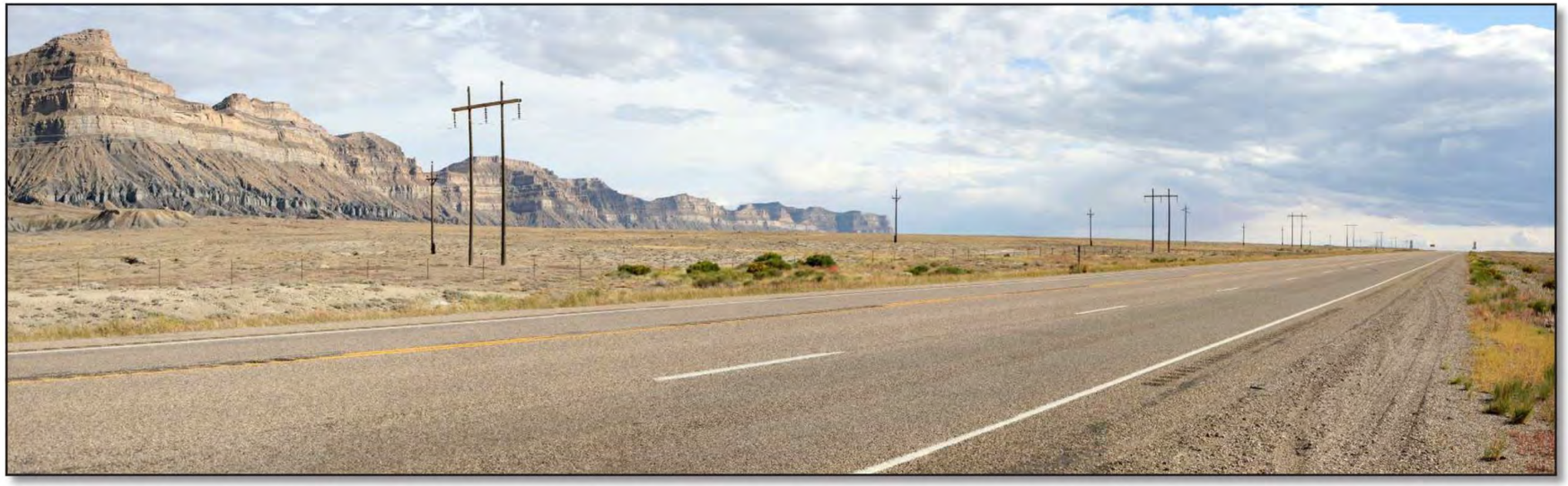

Existing Condition – View looking southeast from the Dinosaur Diamond Scenic Byway (U.S. Highway 6) at the intersection of the Green River Cutoff Road toward Mount Elliot and the Book Cliffs

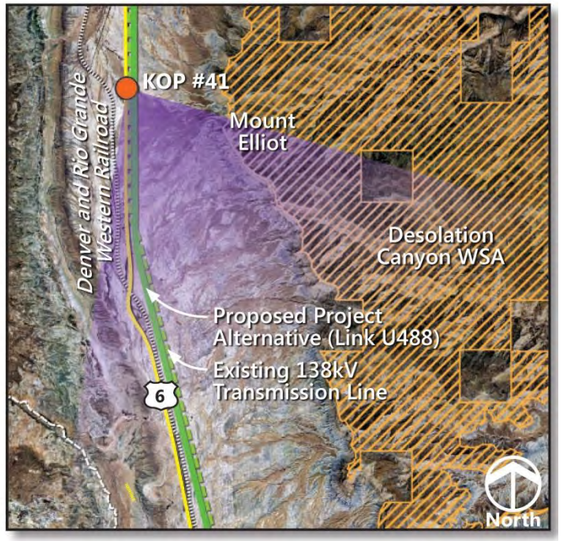

View Location: The proposed transmission line would be located adjacent to the photo location.

Simulated Condition – View of Alternatives COUT BAX-C and COUT BAX-E

500kV TOWER STRUCTURE DIAGRAM

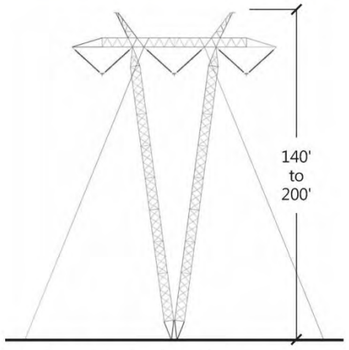

Typical single-circuit 500kV dull-galvanized guyed-V transmission tower

Final EIS and Proposed LUPAs for the Energy Gateway South Transmission Project

KOP #41 – Dinosaur Diamond Scenic Byway (US 6)

Photo Date and Time: October 4, 2011, 4:03 p.m. Focal Length: 50mm
The original photographs were taken at 50mm, then stitched together to create this panorama, resulting in a 59-degree field of view.
The above simulation is intended to be viewed 16 inches from viewer's eyes when printed on 11x17 paper.

Simulations were prepared using three-dimensional tower models and information provided by Rocky Mountain Power. Typical towers would range between 140 feet to 200 feet above ground with a span of 1,600 feet. Tower locations and heights may differ based on final engineering and design.

September 2015

Existing Condition – View looking northeast from residences southwest of Craig, Colorado

Simulated Condition – View of Alternative WYCO-D[1]

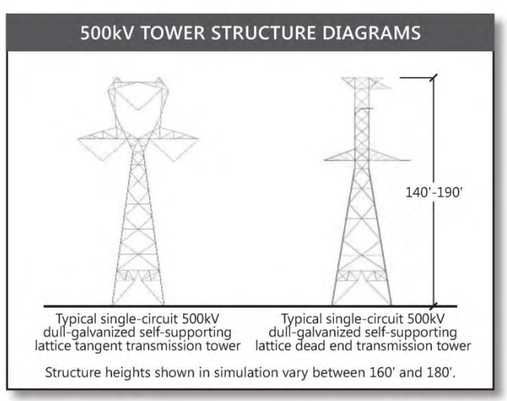

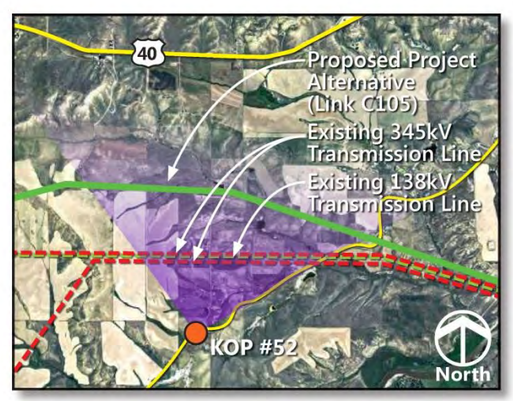

Simulations were prepared using three-dimensional tower models and information provided by Rocky Mountain Power. Typical towers would range between 140 to 190 feet above ground with a span of 1,200 feet. Tower locations and heights may differ based on final engineering and design.

View Location:
Approximate distance to proposed transmission line from photo location is 1.1 miles.

Note:[1] This view is in vicinity of Series Compensation Station Siting Area D – Bell Rock. Based on the final location, this facility may be visible and result in stronger visual contrast from this viewpoint.

Photo Date and Time: September 27, 2011, 9:05 a.m. Focal Length: 50mm
The original photographs were taken at 50mm, then stitched together to create this panorama, resulting in a 100-degree field of view.
The above simulation is intended to be viewed 16 inches from viewer's eyes when printed on 11x17 paper.

Final EIS and Proposed LUPAs for the Energy Gateway South Transmission Project

KOP #52 – Dispersed Residences southwest of Craig

September 2015

Existing Condition – View looking northeast from residences southwest of Craig, Colorado

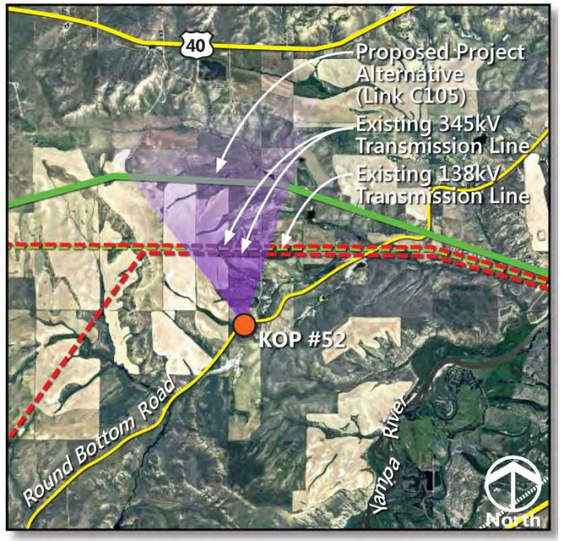

View Location: Approximate distance of proposed transmission line from photo location is 1.1 miles.

Simulated Condition – View of Alternative WYCO-D[1]

500kV TOWER STRUCTURE DIAGRAMS

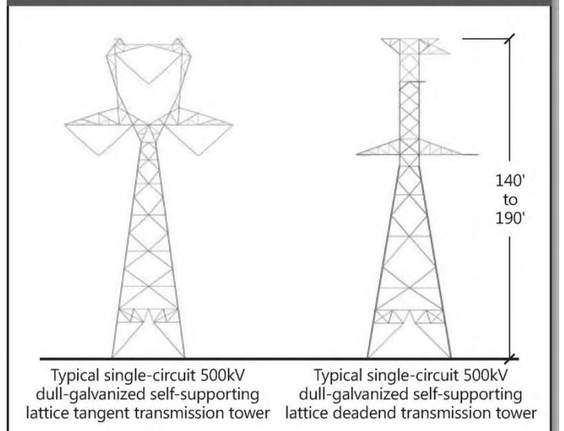

Note:[1] This view is in vicinity of Series Compensation Station Siting Area D – Bell Rock. Based on the final location, this facility may be visible and result in stronger visual contrast from this viewpoint.

Photo Date and Time: September 27, 2011, 9:05 a.m. Focal Length: 50mm
The original photographs were taken at 50mm, then stitched together to create this panorama, resulting in a 44-degree field of view.
The above simulation is intended to be viewed 16 inches from viewer's eyes when printed on 11x17 paper.

Simulations were prepared using three-dimensional tower models and information provided by Rocky Mountain Power. Typical towers would range between 140 to 190 feet above ground with a span of 1,200 feet. Tower locations and heights may differ based on final engineering and design.

Final EIS and Proposed LUPAs for the Energy Gateway South Transmission Project

KOP #52 – Dispersed Residences southwest of Craig ~View A~

September 2015

Existing Condition – View looking northeast from residences southwest of Craig, Colorado

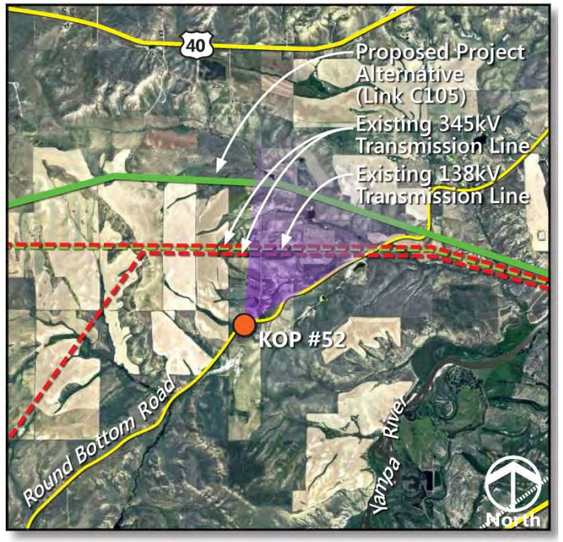

View Location: Approximate distance of proposed transmission line from photo location is 1.1 miles.

Simulated Condition – View of Alternative WYCO-D[1]

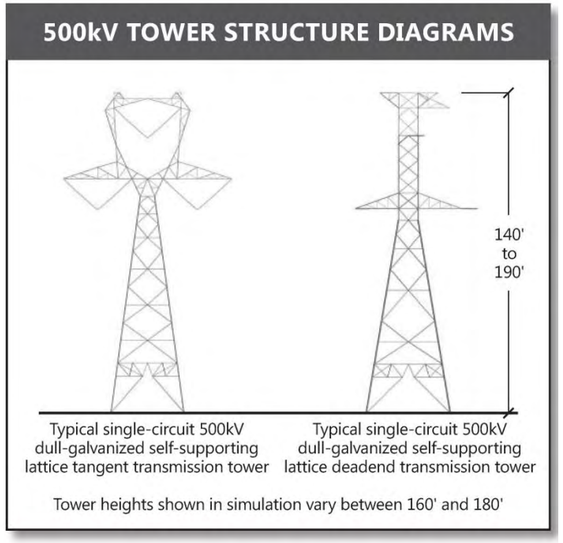

Note:[1] This view is in vicinity of Series Compensation Station Siting Area D – Bell Rock. Based on the final location, this facility may be visible and result in stronger visual contrast from this viewpoint.

Photo Date and Time: September 27, 2011, 9:05 a.m. Focal Length: 50mm
The original photographs were taken at 50mm, then stitched together to create this panorama, resulting in a 54-degree field of view.
The above simulation is intended to be viewed 16 inches from viewer's eyes when printed on 11x17 paper.

Simulations were prepared using three-dimensional tower models and information provided by Rocky Mountain Power. Typical towers would range between 140 to 190 feet above ground with a span of 1,200 feet. Tower locations and heights may differ based on final engineering and design.

Final EIS and Proposed LUPAs for the Energy Gateway South Transmission Project

KOP #52 – Dispersed Residences southwest of Craig ~View B~

September 2015

Existing Condition – View looking northeast from residences southwest of Craig, Colorado

Simulated Condition – View of Alternative WYCO-D[1] and the proposed TransWest Express transmission line

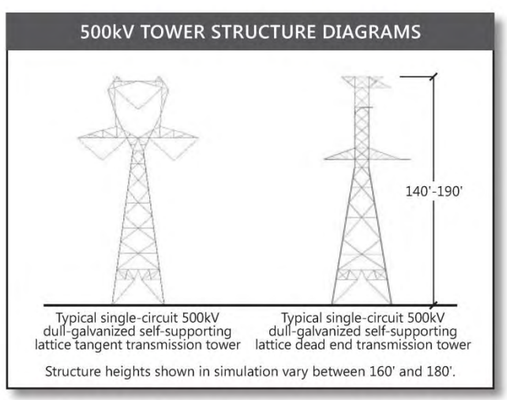

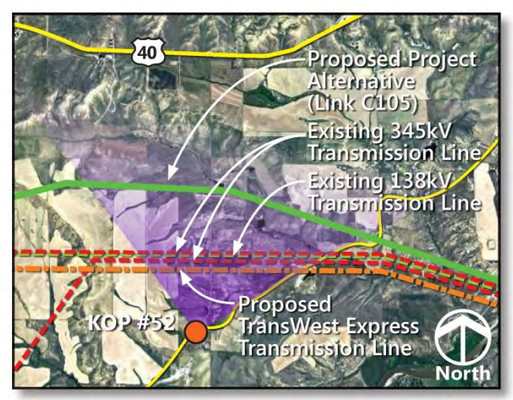

Energy Gateway South simulations were prepared using three-dimensional tower models and information provided by Rocky Mountain Power. Typical towers would range between 140 to 190 feet above ground with a span of 1,200 feet. Tower locations and heights may differ based on final engineering and design.

Cumulative effect simulations depicting the proposed TransWest Express project are conceptual and shown for reference only.

View Location:
Approximate distance to proposed transmission line from photo location is 1.1 miles.

Note:[1] This view is in vicinity of Series Compensation Station Siting Area D – Bell Rock. Based on the final location, this facility may be visible and result in stronger visual contrast from this viewpoint.

Photo Date and Time: September 27, 2011, 9:05 a.m. Focal Length: 50mm
The original photographs were taken at 50mm, then stitched together to create this panorama, resulting in a 100-degree field of view.
The above simulation is intended to be viewed 16 inches from viewer's eyes when printed on 11x17 paper.

Final EIS and Proposed LUPAs for the Energy Gateway South Transmission Project

KOP #52 – Dispersed Residences southwest of Craig
Cumulative Effects

September 2015

Existing Condition – View looking northeast from residences southwest of Craig, Colorado

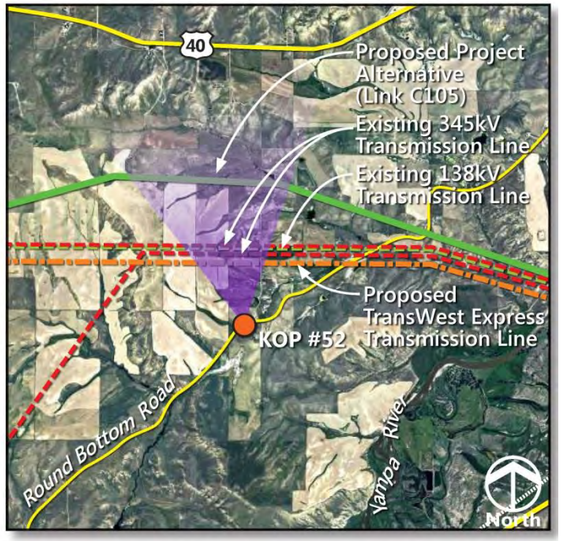

View Location: Approximate distance of proposed transmission line from photo location is 1.1 miles.

Simulated Condition – View of Alternative WYCO-D[1] and the proposed TransWest Express transmission line

Note:[1] This view is in vicinity of Series Compensation Station Siting Area D – Bell Rock. Based on the final location, this facility may be visible and result in stronger visual contrast from this viewpoint.

Photo Date and Time: September 27, 2011, 9:05 a.m. Focal Length: 50mm
The original photographs were taken at 50mm, then stitched together to create this panorama, resulting in a 44-degree field of view.
The above simulation is intended to be viewed 16 inches from viewer's eyes when printed on 11x17 paper.

Energy Gateway South simulations were prepared using three-dimensional tower models and information provided by Rocky Mountain Power. Typical towers would range between 140 to 190 feet above ground with a span of 1,200 feet. Tower locations and heights may differ based on final engineering and design.

Cumulative effect simulations depicting the proposed TransWest Express project are conceptual and shown for reference only.

500kV TOWER STRUCTURE DIAGRAMS

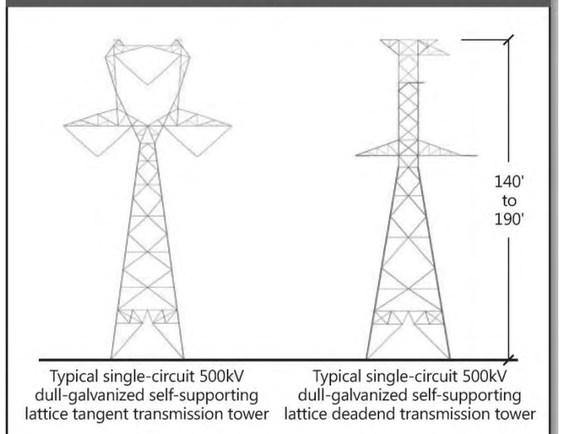

Final EIS and Proposed LUPAs for the Energy Gateway South Transmission Project

KOP #52 – Dispersed Residences southwest of Craig ~View A~ Cumulative Effects

September 2015

Existing Condition – View looking northeast from residences southwest of Craig, Colorado

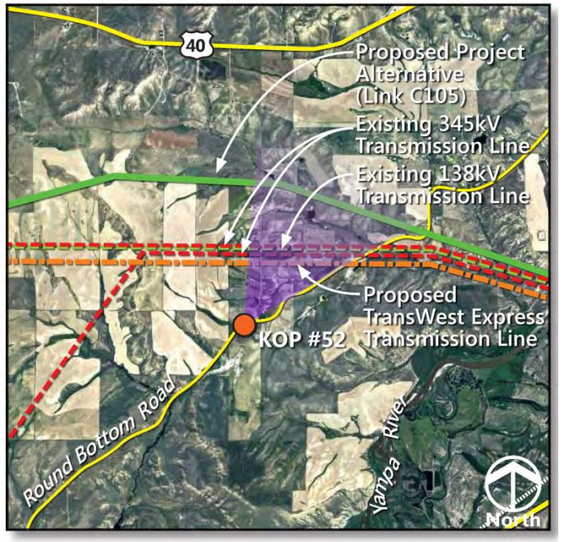

View Location: Approximate distance of proposed transmission line from photo location is 1.1 miles.

Simulated Condition – View of Alternative WYCO-D[1] and the proposed TransWest Express transmission line

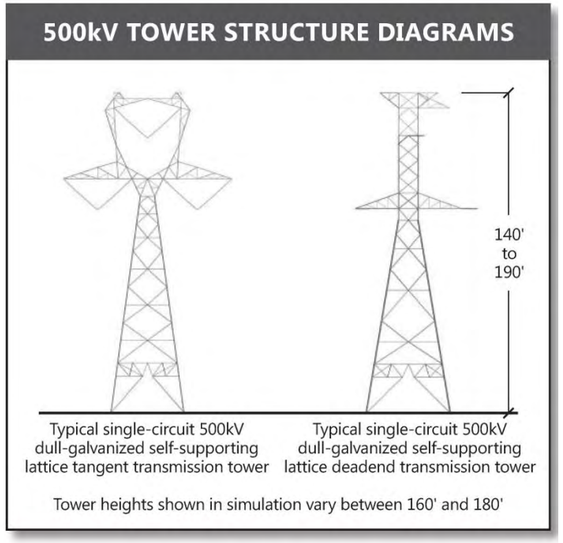

Note:[1] This view is in vicinity of Series Compensation Station Siting Area D – Bell Rock. Based on the final location, this facility may be visible and result in stronger visual contrast from this viewpoint.

Photo Date and Time: September 27, 2011, 9:05 a.m. Focal Length: 50mm
The original photographs were taken at 50mm, then stitched together to create this panorama, resulting in a 54-degree field of view.
The above simulation is intended to be viewed 16 inches from viewer's eyes when printed on 11x17 paper.

Energy Gateway South simulations were prepared using three-dimensional tower models and information provided by Rocky Mountain Power. Typical towers would range between 140 to 190 feet above ground with a span of 1,200 feet. Tower locations and heights may differ based on final engineering and design.

Cumulative effect simulations depicting the proposed TransWest Express project are conceptual and shown for reference only.

Final EIS and Proposed LUPAs for the Energy Gateway South Transmission Project

KOP #52 – Dispersed Residences southwest of Craig ~View B~ Cumulative Effects

September 2015

Existing Condition – View looking east from residences adjacent to Colorado State Highway 13, approximately 20 miles north of Craig

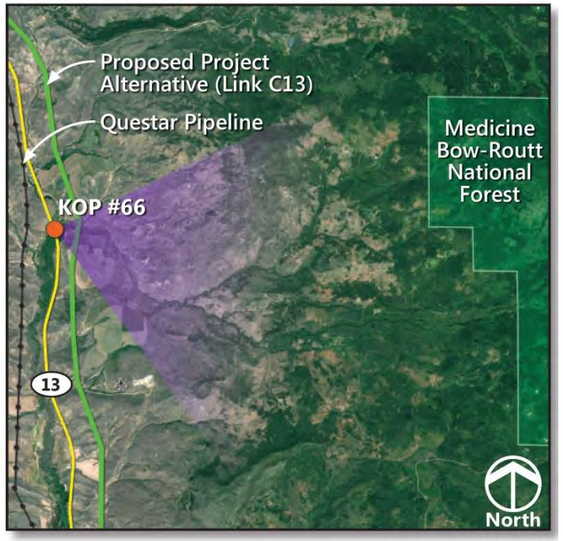

View Location: Approximate distance to proposed transmission line from photo location is 0.3 mile.

Simulated Condition – View of Alternative WYCO-D

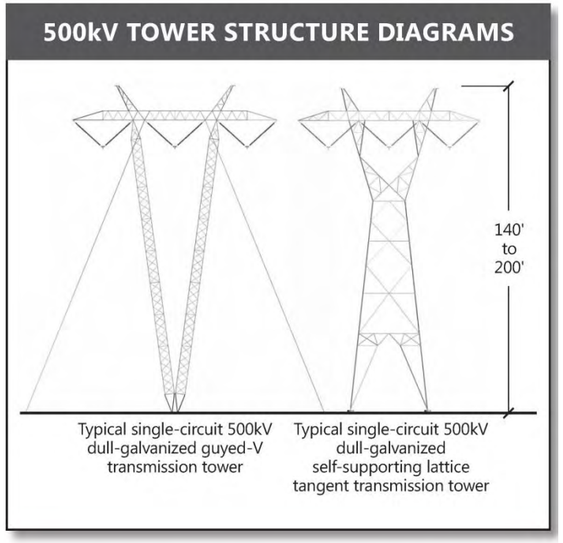

Photo Date and Time: September 27, 2011, 2:14 p.m. Focal Length: 50mm
The original photographs were taken at 50mm, then stitched together to create this panorama, resulting in a 73-degree field of view.
The above simulation is intended to be viewed 16 inches from viewer's eyes when printed on 11x17 paper.

Simulations were prepared using three-dimensional tower models and information provided by Rocky Mountain Power. Typical towers would range between 140 feet to 200 feet above ground with a span of 1,600 feet. Tower locations and heights may differ based on final engineering and design.

Final EIS and Proposed LUPAs for the Energy Gateway South Transmission Project

KOP #66 – Dispersed Residences along Colorado State Highway 13

September 2015

Existing Condition – View looking south from the Enron Recreation Area on the White River toward BLM VRM Class III lands

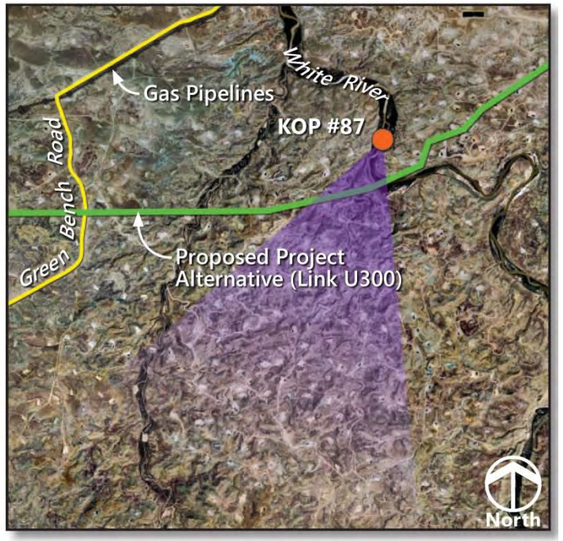

View Location: Approximate distance to proposed transmission line from photo location is 0.4 mile.

Simulated Condition – View of Alternatives COUT-C, COUT-H, and COUT-I

500kV TOWER STRUCTURE DIAGRAM

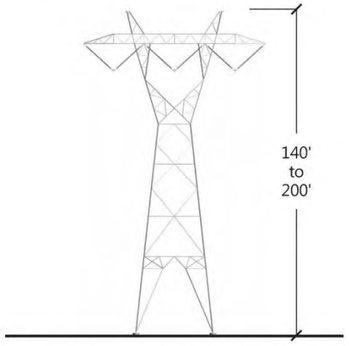

Typical single-circuit 500kV dull-galvanized self-supporting lattice tangent transmission tower

Photo Date and Time: July 25, 2012, 10:10 a.m. Focal Length: 50mm
The original photographs were taken at 50mm, then stitched together to create this panorama, resulting in a 54-degree field of view.
The above simulation is intended to be viewed 16 inches from viewer's eyes when printed on 11x17 paper.

Simulations were prepared using three-dimensional tower models and information provided by Rocky Mountain Power. Typical towers would range between 140 feet to 200 feet above ground with a span of 1,600 feet. Tower locations and heights may differ based on final engineering and design.

Final EIS and Proposed LUPAs for the Energy Gateway South Transmission Project

KOP #87 – Enron Recreation Area (on White River)

September 2015

Existing Condition – View looking south from the Enron Recreation Area on the White River toward BLM VRM Class III lands

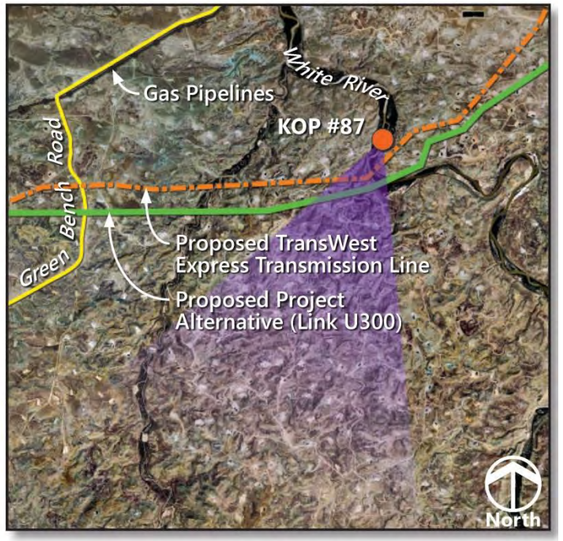

View Location: Approximate distance to proposed transmission line from photo location is 0.4 mile.

Simulated Condition – View of Alternatives COUT-C, COUT-H, and COUT-I, and the proposed TransWest Express transmission line

500kV TOWER STRUCTURE DIAGRAM

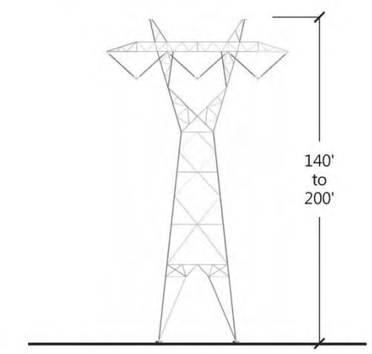

Typical single-circuit 500kV dull-galvanized self-supporting lattice tangent transmission tower

Photo Date and Time: July 25, 2012, 10:10 a.m. Focal Length: 50mm
The original photographs were taken at 50mm, then stitched together to create this panorama, resulting in a 54-degree field of view.
The above simulation is intended to be viewed 16 inches from viewer's eyes when printed on 11x17 paper.

Energy Gateway South simulations were prepared using three-dimensional tower models and information provided by Rocky Mountain Power. Typical towers would range between 140 feet to 200 feet above ground with a span of 1,600 feet. Tower locations and heights may differ based on final engineering and design.

Cumulative effect simulations depicting the proposed TransWest Express project are conceptual and shown for reference only.

Final EIS and Proposed LUPAs for the Energy Gateway South Transmission Project

KOP #87 – Enron Recreation Area (on White River)
Cumulative Effects

September 2015

Existing Condition – View looking south from dispersed residences south of Roosevelt, Utah

View Location: Approximate distance to proposed transmission line from photo location is 0.2 mile.

Simulated Condition – View of Alternatives COUT-A and COUT-B[1]

500kV TOWER STRUCTURE DIAGRAM

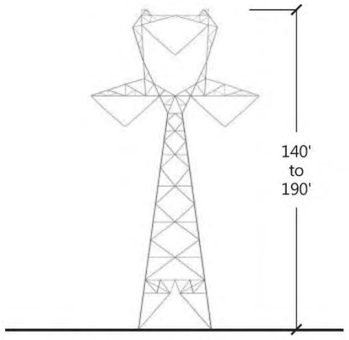

Typical single-circuit 500kV dull-galvanized self-supporting lattice tangent transmission tower

Tower heights shown in simulation vary between 160' and 180'

Note:[1] This view is in vicinity of Series Compensation Station Siting Area F – Roosevelt. Based on the final location, this facility may be visible and result in stronger visual contrast from this viewpoint.

Photo Date and Time: July 25, 2012, 12:53 p.m. Focal Length: 50mm
The original photographs were taken at 50mm, then stitched together to create this panorama, resulting in a 72-degree field of view
The above simulation is intended to be viewed 16 inches from viewer's eyes when printed on 11x17 paper.

Simulations were prepared using three-dimensional tower models and information provided by Rocky Mountain Power. Typical towers would range between 140 to 190 feet above ground with a span of 1,200 feet. Tower locations and heights may differ based on final engineering and design.

Final EIS and Proposed LUPAs for the Energy Gateway South Transmission Project

KOP #109 – Dispersed Residences south of Roosevelt

September 2015

Existing Condition – View looking south from Deerlodge Road in Dinosaur National Monument toward Elk Spring Ridge and BLM VRM Class III lands

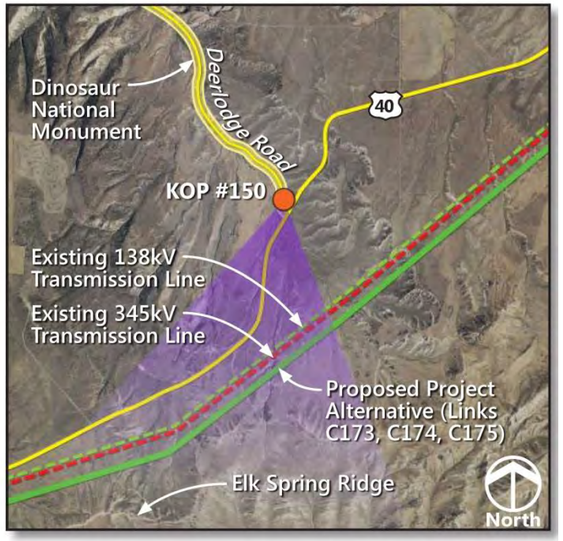

View Location: Approximate distance to proposed transmission line from photo location is 0.4 mile.

Simulated Condition – View of Alternatives WYCO-B, WYCO-C, WYCO-D, and WYCO-F

500kV TOWER STRUCTURE DIAGRAM

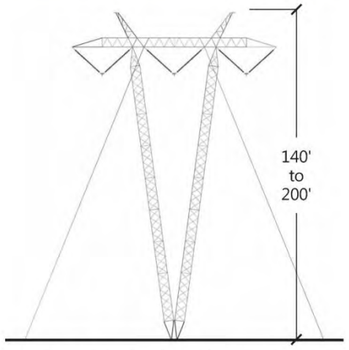

Typical single-circuit 500kV dull-galvanized guyed-V transmission tower

Photo Date and Time: May 02, 2013, 1:40 p.m. Focal Length: 50mm
The original photographs were taken at 50mm, then stitched together to create this panorama, resulting in a 59-degree field of view.
The above simulation is intended to be viewed 16 inches from viewer's eyes when printed on 11x17 paper.

Simulations were prepared using three-dimensional tower models and information provided by Rocky Mountain Power. Typical towers would range between 140 feet to 200 feet above ground with a span of 1,600 feet. Tower locations and heights may differ based on final engineering and design.

Final EIS and Proposed LUPAs for the Energy Gateway South Transmission Project

KOP #150a – Dinosaur National Monument (Deerlodge Road)

September 2015

Existing Condition – View looking south from Deerlodge Road in Dinosaur National Monument toward Elk Spring Ridge and BLM VRM Class III lands

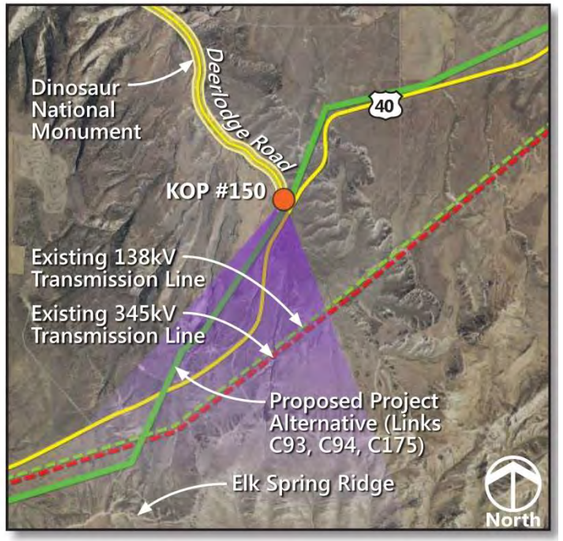

View Location: The proposed transmission line would be located adjacent to the photo location.

Simulated Condition – View of Deerlodge Road Area Variation 1

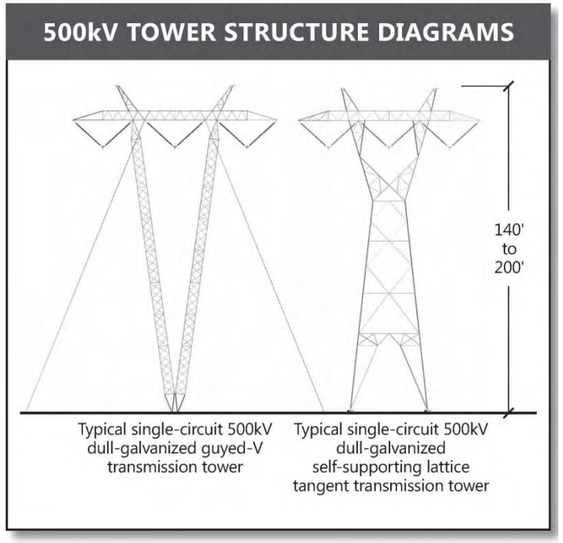

Photo Date and Time: May 02, 2013, 1:40 p.m. Focal Length: 50mm
The original photographs were taken at 50mm, then stitched together to create this panorama, resulting in a 59-degree field of view.
The above simulation is intended to be viewed 16 inches from viewer's eyes when printed on 11x17 paper.

Simulations were prepared using three-dimensional tower models and information provided by Rocky Mountain Power. Typical towers would range between 140 feet to 200 feet above ground with a span of 1,600 feet. Tower locations and heights may differ based on final engineering and design.

Final EIS and Proposed LUPAs for the Energy Gateway South Transmission Project

KOP #150b – Dinosaur National Monument (Deerlodge Road)

September 2015

Existing Condition – View looking south from Deerlodge Road in Dinosaur National Monument toward Elk Spring Ridge and BLM VRM Class III lands

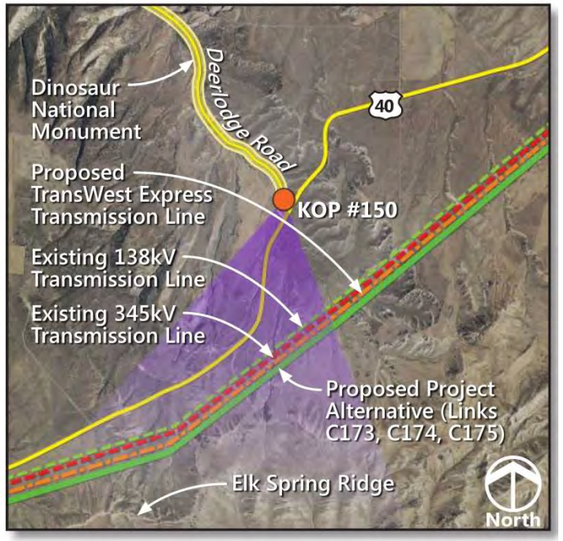

View Location: Approximate distance to proposed transmission line from photo location is 0.4 mile.

Simulated Condition – View of Alternatives WYCO-B, WYCO-C, WYCO-D, and WYCO-F and the proposed TransWest Express transmission line

500kV TOWER STRUCTURE DIAGRAM

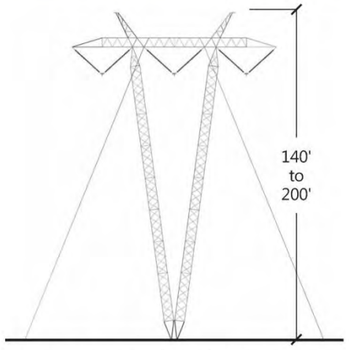

Typical single-circuit 500kV dull-galvanized guyed-V transmission tower

Photo Date and Time: May 02, 2013, 1:40 p.m. Focal Length: 50mm
The original photographs were taken at 50mm, then stitched together to create this panorama, resulting in a 59-degree field of view.
The above simulation is intended to be viewed 16 inches from viewer's eyes when printed on 11x17 paper.

Energy Gateway South simulations were prepared using three-dimensional tower models and information provided by Rocky Mountain Power. Typical towers would range between 140 feet to 200 feet above ground with a span of 1,600 feet. Tower locations and heights may differ based on final engineering and design.

Cumulative effect simulations depicting the proposed TransWest Express project are conceptual and shown for reference only.

Final EIS and Proposed LUPAs for the Energy Gateway South Transmission Project

KOP #150a – Dinosaur National Monument (Deerlodge Road)
Cumulative Effects

September 2015

Existing Condition – View looking south from Deerlodge Road in Dinosaur National Monument toward Elk Spring Ridge and BLM VRM Class III lands

View Location: The proposed transmission line would be located adjacent to the photo location.

Simulated Condition – View of Deerlodge Road Area Variation 1 and the proposed TransWest Express transmission line

500kV TOWER STRUCTURE DIAGRAMS

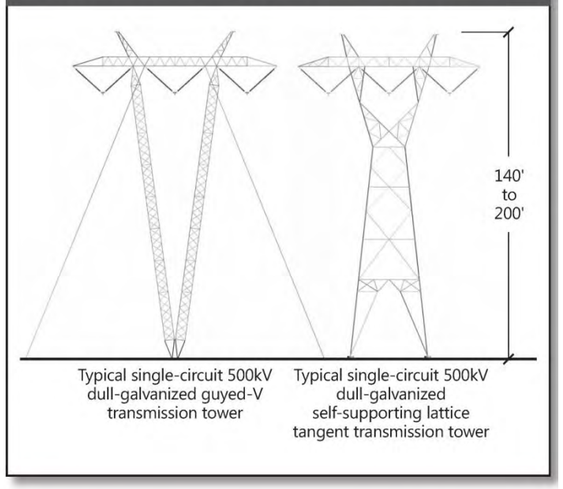

Photo Date and Time: May 02, 2013, 1:40 p.m. Focal Length: 50mm
The original photographs were taken at 50mm, then stitched together to create this panorama, resulting in a 59-degree field of view.
The above simulation is intended to be viewed 16 inches from viewer's eyes when printed on 11x17 paper.

Energy Gateway South simulations were prepared using three-dimensional tower models and information provided by Rocky Mountain Power. Typical towers would range between 140 feet to 200 feet above ground with a span of 1,600 feet. Tower locations and heights may differ based on final engineering and design.

Cumulative effect simulations depicting the proposed TransWest Express project are conceptual and shown for reference only.

Final EIS and Proposed LUPAs for the Energy Gateway South Transmission Project

KOP #150b – Dinosaur National Monument (Deerlodge Road)
Cumulative Effects

September 2015

Existing Condition – View looking northwest from the Harley Dome Rest Area Overlook adjacent to the Dinosaur Diamond Scenic Byway (Interstate 70) toward BLM VRM Class III lands

View Location: Approximate distance to proposed transmission line from photo location is 1.3 miles.

Simulated Condition – View of Alternatives COUT BAX-B, COUT BAX-C, and COUT BAX-E

500kV TOWER STRUCTURE DIAGRAM

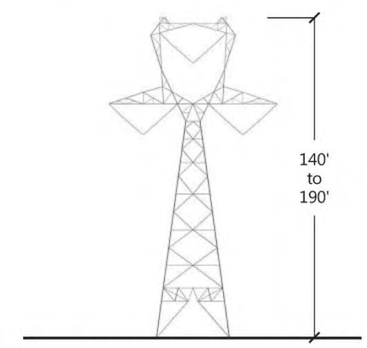

Typical single-circuit 500kV dull-galvanized self-supporting lattice tangent transmission tower

Tower heights shown in simulation vary between 160' and 180'

Photo Date and Time: October 11, 2011, 3:31 p.m. Focal Length: 50mm
The original photographs were taken at 50mm, then stitched together to create this panorama, resulting in a 61-degree field of view.
The above simulation is intended to be viewed 16 inches from viewer's eyes when printed on 11x17 paper.

Simulations were prepared using three-dimensional tower models and information provided by Rocky Mountain Power. Typical towers would range between 140 to 190 feet above ground with a span of 1,200 feet. Tower locations and heights may differ based on final engineering and design.

Final EIS and Proposed LUPAs for the Energy Gateway South Transmission Project

KOP #152 – Interstate 70 Harley Dome Overlook (Dinosaur Diamond Scenic Byway)

September 2015

Existing Condition – View looking northwest from the Harley Dome Rest Area Overlook adjacent to the Dinosaur Diamond Scenic Byway (Interstate 70) toward BLM VRM Class III lands

View Location: Approximate distance to proposed transmission line from photo location is 1.3 miles.

Simulated Condition – View of Alternatives COUT BAX-B, COUT BAX-C, and COUT BAX-E, and the proposed TransWest Express transmission line

500kV TOWER STRUCTURE DIAGRAM

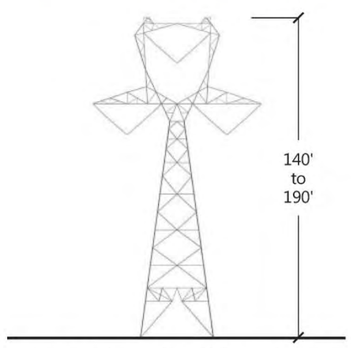

Typical single-circuit 500kV dull-galvanized self-supporting lattice tangent transmission tower

Tower heights shown in simulation vary between 160' and 180'

Photo Date and Time: October 11, 2011, 3:31 p.m. Focal Length: 50mm
The original photographs were taken at 50mm, then stitched together to create this panorama, resulting in a 61-degree field of view.
The above simulation is intended to be viewed 16 inches from viewer's eyes when printed on 11x17 paper.

Energy Gateway South simulations were prepared using three-dimensional tower models and information provided by Rocky Mountain Power. Typical towers would range between 140 to 190 feet above ground with a span of 1,200 feet. Tower locations and heights may differ based on final engineering and design.

Cumulative effect simulations depicting the proposed TransWest Express project are conceptual and shown for reference only.

Final EIS and Proposed LUPAs for the Energy Gateway South Transmission Project

KOP #152 – Interstate 70 Harley Dome Overlook (Dinosaur Diamond Scenic Byway) Cumulative Effects

September 2015

Existing Condition – View looking northwest from the Crescent Junction Rest Stop on I-70, part of the Dinosaur Diamond Scenic Byway, toward the Book Cliffs and BLM VRM Class III lands

View Location: Approximate distance to proposed transmission line from photo location is 1.0 mile.

Simulated Condition – View of Alternatives COUT BAX-B, COUT BAX-C, and COUT BAX-E

500kV TOWER STRUCTURE DIAGRAM

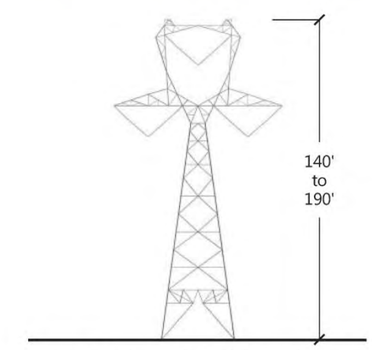

Typical single-circuit 500kV dull-galvanized self-supporting lattice tangent transmission tower

Tower heights shown in simulation vary between 160' and 180'

Final EIS and Proposed LUPAs for the Energy Gateway South Transmission Project

KOP #193 – I-70 Crescent Junction Rest Stop

Photo Date and Time: July 23, 2012, 2:06 p.m. Focal Length: 50mm
The original photographs were taken at 50mm, then stitched together to create this panorama, resulting in a 42-degree field of view.
The above simulation is intended to be viewed 16 inches from viewer's eyes when printed on 11x17 paper.

Simulations were prepared using three-dimensional tower models and information provided by Rocky Mountain Power. Typical towers would range between 140 to 190 feet above ground with a span of 1,200 feet. Tower locations and heights may differ based on final engineering and design.

Existing Condition – View looking northwest from the Crescent Junction Rest Stop on I-70, part of the Dinosaur Diamond Scenic byway, toward the Book Cliffs and BLM VRM Class III lands

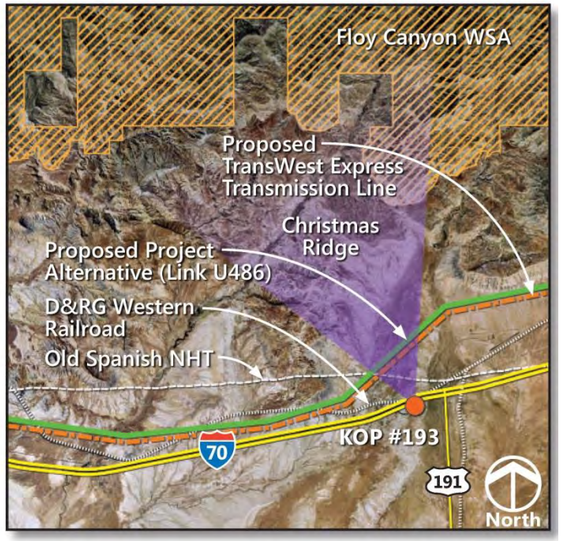

View Location: Approximate distance to proposed transmission line from photo location is 1.0 mile.

Simulated Condition – View of Alternatives COUT BAX-B, COUT BAX-C, and COUT BAX-E, and the proposed TransWest Express transmission line

500kV TOWER STRUCTURE DIAGRAM

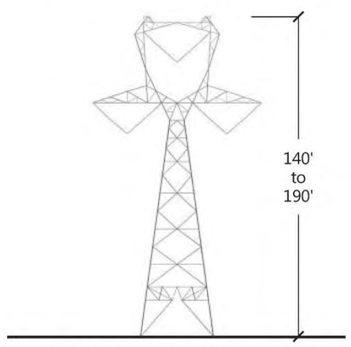

Typical single-circuit 500kV dull-galvanized self-supporting lattice tangent transmission tower

Tower heights shown in simulation vary between 160' and 180'

Photo Date and Time: July 23, 2012, 2:06 p.m. Focal Length: 50mm
The original photographs were taken at 50mm, then stitched together to create this panorama, resulting in a 42-degree field of view.
The above simulation is intended to be viewed 16 inches from viewer's eyes when printed on 11x17 paper.

Energy Gateway South simulations were prepared using three-dimensional tower models and information provided by Rocky Mountain Power. Typical towers would range between 140 to 190 feet above ground with a span of 1,200 feet. Tower locations and heights may differ based on final engineering and design.

Cumulative effect simulations depicting the proposed TransWest Express project are conceptual and shown for reference only.

Final EIS and Proposed LUPAs for the Energy Gateway South Transmission Project

KOP #193 – I-70 Crescent Junction Rest Stop
Cumulative Effects

September 2015

Existing Condition – View looking southwest from Indian Creek Campground in the Manti-La Sal National Forest

Simulated Condition – View of Alternatives COUT BAX-B, COUT BAX-C, and COUT-I

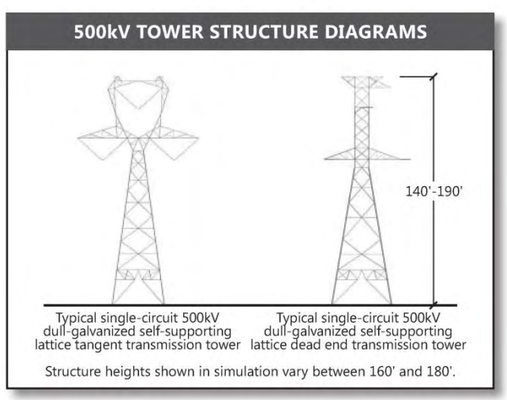

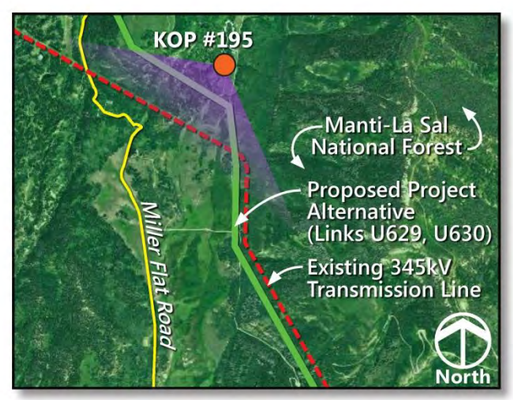

Simulations were prepared using three-dimensional tower models and information provided by Rocky Mountain Power. Typical towers would range between 140 to 190 feet above ground with a span of 1,200 feet. Tower locations and heights may differ based on final engineering and design.

View Location:
Approximate distance to proposed transmission line from photo location is 0.3 mile.

Photo Date and Time: September 27, 2011, 11:56 a.m. Focal Length: 50mm
The original photographs were taken at 50mm, then stitched together to create this panorama, resulting in a 135-degree field of view.
The above simulation is intended to be viewed 16 inches from viewer's eyes when printed on 11x17 paper.

Final EIS and Proposed LUPAs for the Energy Gateway South Transmission Project

KOP #195 – Indian Creek Campground

September 2015

Existing Condition – View looking southwest from Indian Creek Campground in the Manti-La Sal National Forest

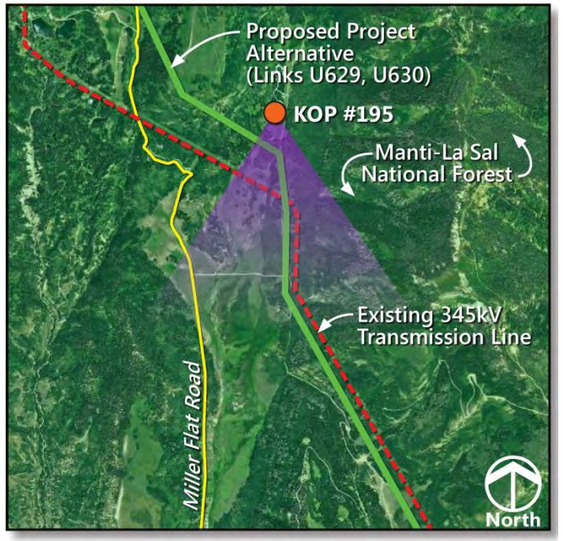

View Location: Approximate distance to proposed transmission line from photo location is 0.3 mile.

Simulated Condition – View of Alternatives COUT BAX-B, COUT BAX-C, and COUT-I

500kV TOWER STRUCTURE DIAGRAMS

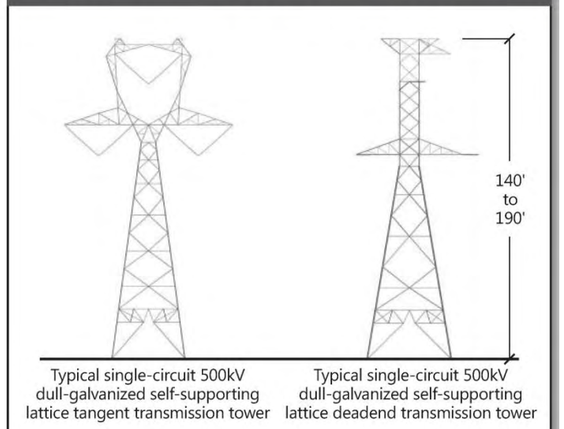

Photo Date and Time: September 27, 2011, 11:56 a.m. Focal Length: 50mm
The original photographs were taken at 50mm, then stitched together to create this panorama, resulting in a 78-degree field of view.
The above simulation is intended to be viewed 16 inches from viewer's eyes when printed on 11x17 paper.

Simulations were prepared using three-dimensional tower models and information provided by Rocky Mountain Power. Typical towers would range between 140 to 190 feet above ground with a span of 1,200 feet. Tower locations and heights may differ based on final engineering and design.

Final EIS and Proposed LUPAs for the Energy Gateway South Transmission Project

KOP #195 – Indian Creek Campground
~View A~

September 2015

Existing Condition – View looking southwest from Indian Creek Campground in the Manti-La Sal National Forest

View Location: Approximate distance to proposed transmission line from photo location is 0.3 mile.

Simulated Condition – View of Alternatives COUT BAX-B, COUT BAX-C, and COUT-I

500kV TOWER STRUCTURE DIAGRAMS

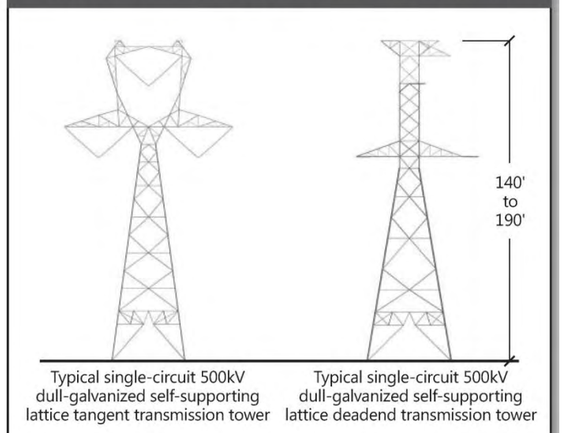

Photo Date and Time: September 27, 2011, 11:56 a.m. Focal Length: 50mm
The original photographs were taken at 50mm, then stitched together to create this panorama, resulting in a 78-degree field of view
The above simulation is intended to be viewed 16 inches from viewer's eyes when printed on 11x17 paper.

Simulations were prepared using three-dimensional tower models and information provided by Rocky Mountain Power. Typical towers would range between 140 to 190 feet above ground with a span of 1,200 feet. Tower locations and heights may differ based on final engineering and design.

Final EIS and Proposed LUPAs for the Energy Gateway South Transmission Project

KOP #195 – Indian Creek Campground
~View B~

September 2015

Existing Condition – View looking southwest from Indian Creek Campground in the Manti-La Sal National Forest

Simulated Condition – View of Alternatives COUT BAX-B, COUT BAX-C, and COUT-I and the proposed TransWest Express transmission line

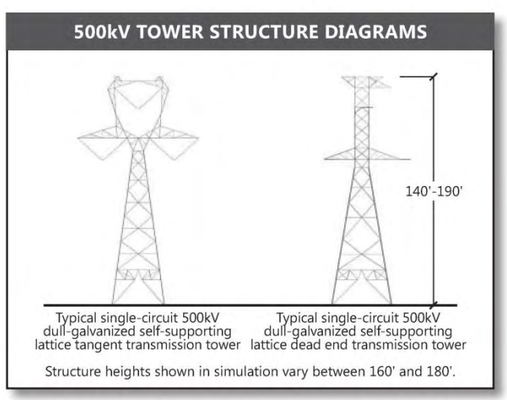

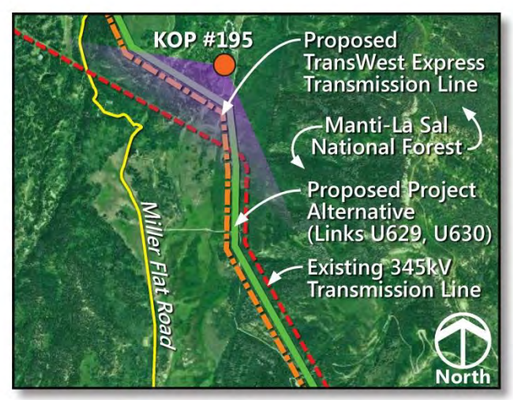

Energy Gateway South simulations were prepared using three-dimensional tower models and information provided by Rocky Mountain Power. Typical towers would range between 140 to 190 feet above ground with a span of 1,200 feet. Tower locations and heights may differ based on final engineering and design.

Cumulative effect simulations depicting the proposed TransWest Express project are conceptual and shown for reference only.

View Location:
Approximate distance to proposed transmission line from photo location is 0.3 mile.

Photo Date and Time: September 27, 2011, 11:56 a.m. Focal Length: 50mm
The original photographs were taken at 50mm, then stitched together to create this panorama, resulting in a 135-degree field of view.
The above simulation is intended to be viewed 16 inches from viewer's eyes when printed on 11x17 paper.

Final EIS and Proposed LUPAs for the Energy Gateway South Transmission Project

KOP #195 – Indian Creek Campground
Cumulative Effects

September 2015

Existing Condition – View looking southwest from Indian Creek Campground in the Manti-La Sal National Forest

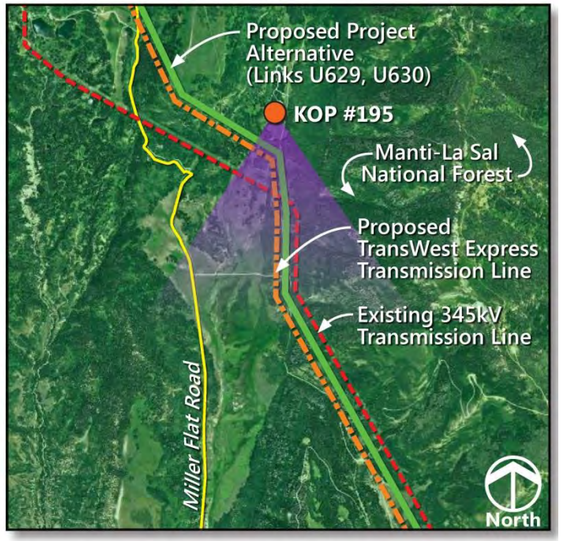

View Location: Approximate distance to proposed transmission line from photo location is 0.3 mile.

Simulated Condition – View of Alternatives COUT BAX-B, COUT BAX-C, and COUT-I and the proposed TransWest Express transmission line

500kV TOWER STRUCTURE DIAGRAMS

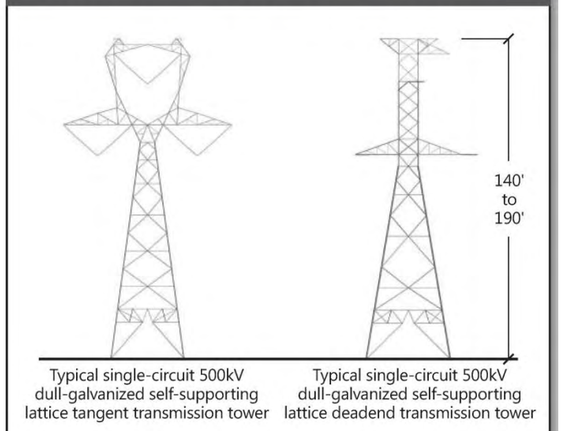

Photo Date and Time: September 27, 2011, 11:56 a.m. Focal Length: 50mm
The original photographs were taken at 50mm, then stitched together to create this panorama, resulting in a 78-degree field of view
The Above simulation is intended to be viewed 16 inches from viewer's eyes when printed on 11x17 paper.

Energy Gateway South simulations were prepared using three-dimensional tower models and information provided by Rocky Mountain Power. Typical towers would range between 140 to 190 feet above ground with a span of 1,200 feet. Tower locations and heights may differ based on final engineering and design.

Cumulative effect simulations depicting the proposed TransWest Express project are conceptual and shown for reference only.

Final EIS and Proposed LUPAs for the Energy Gateway South Transmission Project

KOP #195 – Indian Creek Campground
~View A~
Cumulative Effects

September 2015

Existing Condition – View looking southwest from Indian Creek Campground in the Manti-La Sal National Forest

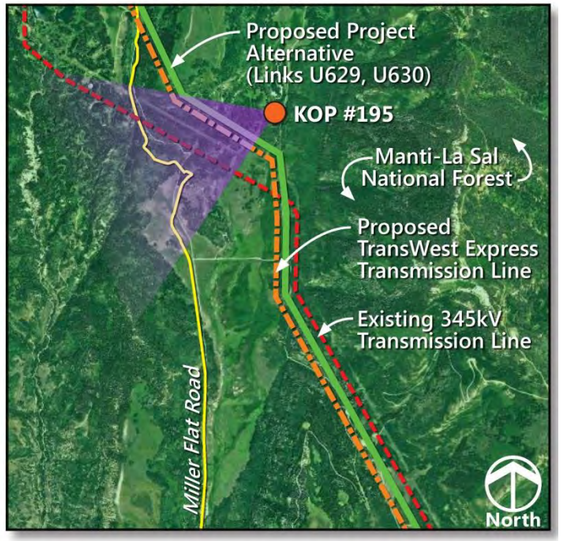

View Location: Approximate distance to proposed transmission line from photo location is 0.3 mile.

Simulated Condition – View of Alternatives COUT BAX-B, COUT BAX-C, and COUT-I and the proposed TransWest Express transmission line

500kV TOWER STRUCTURE DIAGRAMS

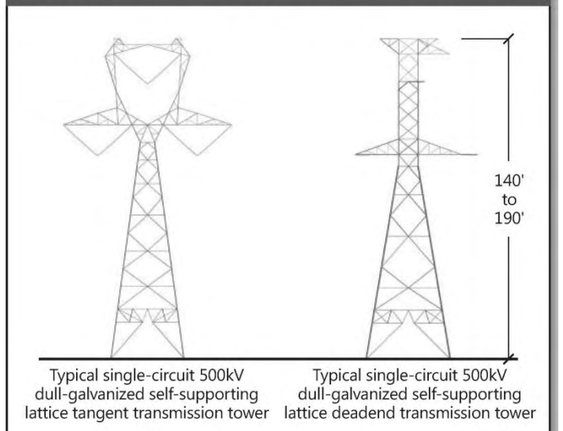

Photo Date and Time: September 27, 2011, 11:56 a.m. Focal Length: 50mm
The original photographs were taken at 50mm, then stitched together to create this panorama, resulting in a 78-degree field of view
The above simulation is intended to be viewed 16 inches from viewer's eyes when printed on 11x17 paper.

Energy Gateway South simulations were prepared using three-dimensional tower models and information provided by Rocky Mountain Power. Typical towers would range between 140 to 190 feet above ground with a span of 1,200 feet. Tower locations and heights may differ based on final engineering and design.

Cumulative effect simulations depicting the proposed TransWest Express project are conceptual and shown for reference only.

Final EIS and Proposed LUPAs for the Energy Gateway South Transmission Project

KOP #195 – Indian Creek Campground
~View B~
Cumulative Effects

September 2015

Existing Condition – View looking southwest from residences south of Hanna, Wyoming

View Location: Approximate distance to proposed transmission line from photo location is 0.4 mile.

Simulated Condition – View of Alternative WYCO-D

500kV TOWER STRUCTURE DIAGRAM

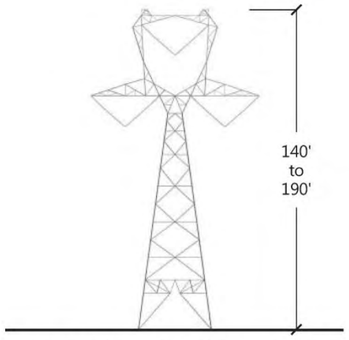

Typical single-circuit 500kV dull-galvanized self-supporting lattice tangent transmission tower

Tower heights shown in simulation vary between 160' and 180'

Final EIS and Proposed LUPAs for the Energy Gateway South Transmission Project

KOP #197 – Hanna Residential

Photo Date and Time: October 6, 2011, 9:01 a.m. Focal Length: 50mm
The original photographs were taken at 50mm, then stitched together to create this panorama, resulting in a 50-degree field of view.
The above simulation is intended to be viewed 16 inches from viewer's eyes when printed on 11x17 paper.

Simulations were prepared using three-dimensional tower models and information provided by Rocky Mountain Power. Typical towers would range between 140 to 190 feet above ground with a span of 1,200 feet. Tower locations and heights may differ based on final engineering and design.

September 2015

Existing Condition – View looking east from Argyle Canyon Road toward BLM VRM Class II and Class III lands

View Location: The proposed transmission line would be located adjacent to the photo location.

Simulated Condition – View of Alternatives COUT-H, COUT-I, and Argyle Ridge Variation 1

500kV TOWER STRUCTURE DIAGRAMS

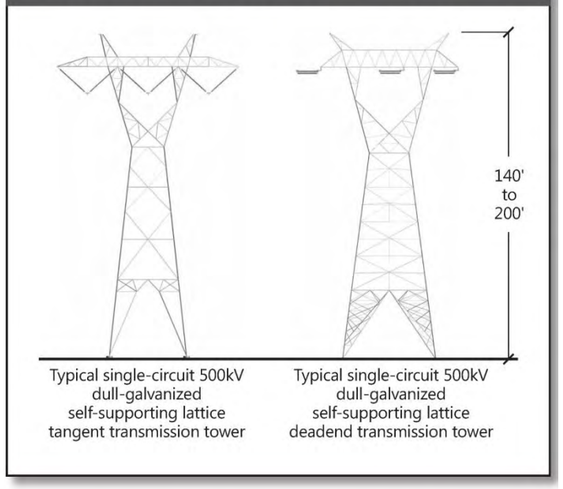

Final EIS and Proposed LUPAs for the Energy Gateway South Transmission Project

KOP #200a – Argyle Canyon Road

Photo Date and Time: July 24, 2012, 3:45 p.m. Focal Length: 50mm
The Above simulation is intended to be viewed 16 inches from viewer's eyes when printed on 11x17 paper.

Simulations were prepared using three-dimensional tower models and information provided by Rocky Mountain Power. Typical towers would range between 140 feet to 200 feet above ground with a span of 1,600 feet. Tower locations and heights may differ based on final engineering and design.

September 2015

Existing Condition – View looking east from Argyle Canyon Road toward BLM VRM Class II and Class III lands

View Location: The proposed transmission line would be located adjacent to the photo location.

Simulated Condition – View of Alternative COUT-C

500kV TOWER STRUCTURE DIAGRAMS

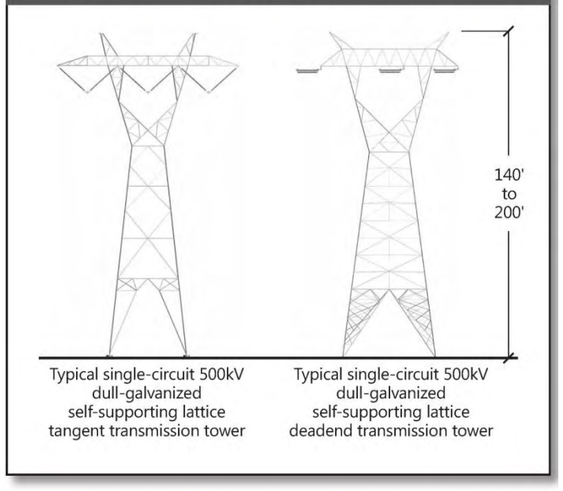

Final EIS and Proposed LUPAs for the Energy Gateway South Transmission Project

KOP #200b – Argyle Canyon Road

Photo Date and Time: July 24, 2012, 3:45 p.m. Focal Length: 50mm
The Above simulation is intended to be viewed 16 inches from viewer's eyes when printed on 11x17 paper.

Simulations were prepared using three-dimensional tower models and information provided by Rocky Mountain Power. Typical towers would range between 140 feet to 200 feet above ground with a span of 1,600 feet. Tower locations and heights may differ based on final engineering and design.

September 2015

Existing Condition – View looking east from Argyle Canyon Road toward BLM VRM Class II and Class III lands

View Location: The proposed transmission line would be located adjacent to the photo location.

Simulated Condition – View of Alternatives COUT-H, COUT-I, and Argyle Ridge Variation 1 and the proposed TransWest Express transmission line

500kV TOWER STRUCTURE DIAGRAMS

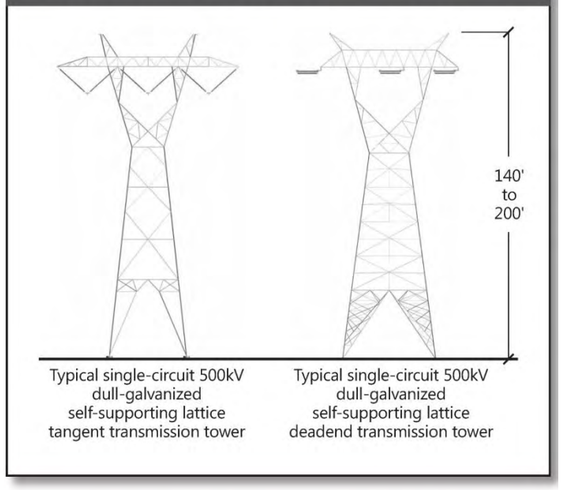

Photo Date and Time: July 24, 2012, 3:45 p.m. Focal Length: 50mm
The Above simulation is intended to be viewed 16 inches from viewer's eyes when printed on 11x17 paper.

Energy Gateway South simulations were prepared using three-dimensional tower models and information provided by Rocky Mountain Power. Typical towers would range between 140 feet to 200 feet above ground with a span of 1,600 feet. Tower locations and heights may differ based on final engineering and design.

Cumulative effect simulations depicting the proposed TransWest Express project are conceptual and shown for reference only.

Final EIS and Proposed LUPAs for the Energy Gateway South Transmission Project

KOP #200a – Argyle Canyon Road
Cumulative Effects

September 2015

Existing Condition – View looking east from Argyle Canyon Road toward BLM VRM Class II and Class III lands

View Location: The proposed transmission line would be located adjacent to the photo location.

Simulated Condition – View of Alternatives COUT-C and the proposed TransWest Express transmission line

500kV TOWER STRUCTURE DIAGRAMS

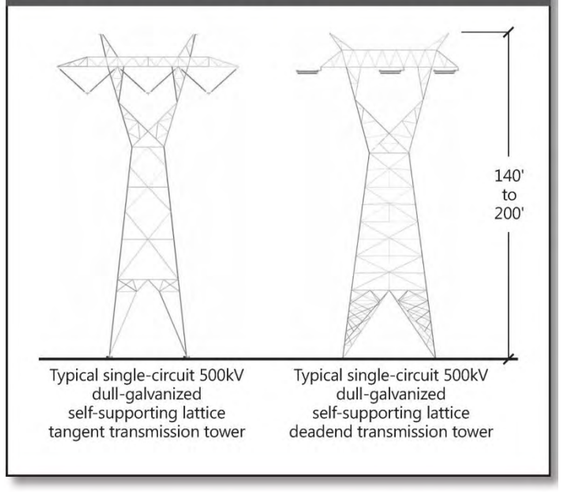

Photo Date and Time: July 24, 2012, 3:45 p.m. Focal Length: 50mm
The Above simulation is intended to be viewed 16 inches from viewer's eyes when printed on 11x17 paper.

Energy Gateway South simulations were prepared using three-dimensional tower models and information provided by Rocky Mountain Power. Typical towers would range between 140 feet to 200 feet above ground with a span of 1,600 feet. Tower locations and heights may differ based on final engineering and design.

Cumulative effect simulations depicting the proposed TransWest Express project are conceptual and shown for reference only.

Final EIS and Proposed LUPAs for the Energy Gateway South Transmission Project

KOP #200b – Argyle Canyon Road
Cumulative Effects

September 2015

Existing Condition – View looking northeast from Fourmile Bottom in the Lower Green River Corridor ACEC toward BLM VRM Class II and Class IV lands

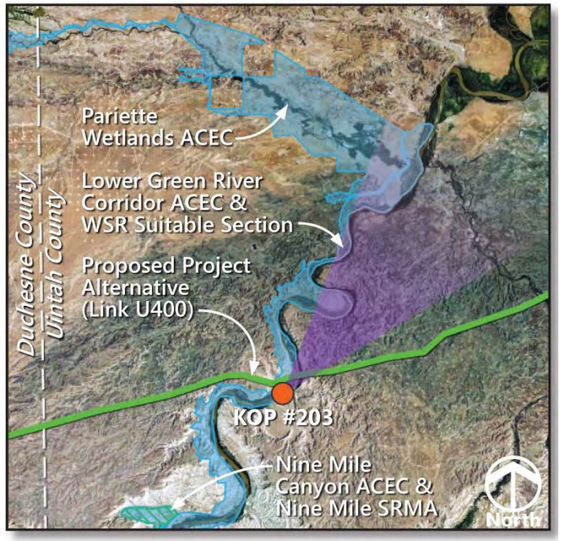

View Location: Approximate distance of proposed transmission line from photo location is 0.9 mile.

Simulated Condition – View of Alternatives COUT-C, COUT-H, and COUT-I

500kV TOWER STRUCTURE DIAGRAMS

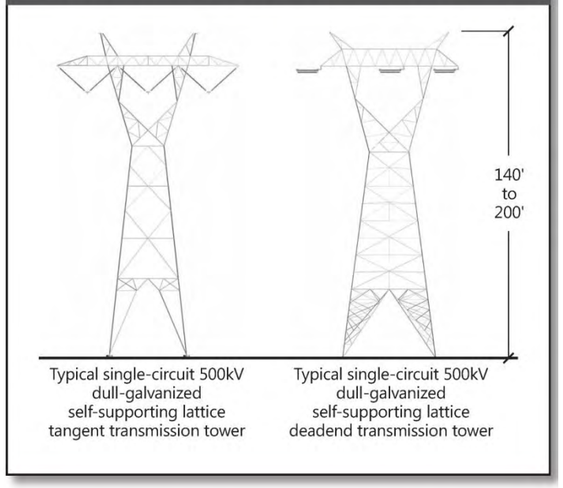

Final EIS and Proposed LUPAs for the Energy Gateway South Transmission Project

KOP #203 – Fourmile Bottom

Photo Date and Time: July 25, 2012, 2:09 p.m. Focal Length: 50mm
The above simulation is intended to be viewed 16 inches from viewer's eyes when printed on 11x17 paper.

Simulations were prepared using three-dimensional tower models and information provided by Rocky Mountain Power. Typical towers would range between 140 feet to 200 feet above ground with a span of 1,600 feet. Tower locations and heights may differ based on final engineering and design.

Existing Condition – View looking northeast from Fourmile Bottom in the Lower Green River Corridor ACEC toward BLM VRM Class II and Class IV lands

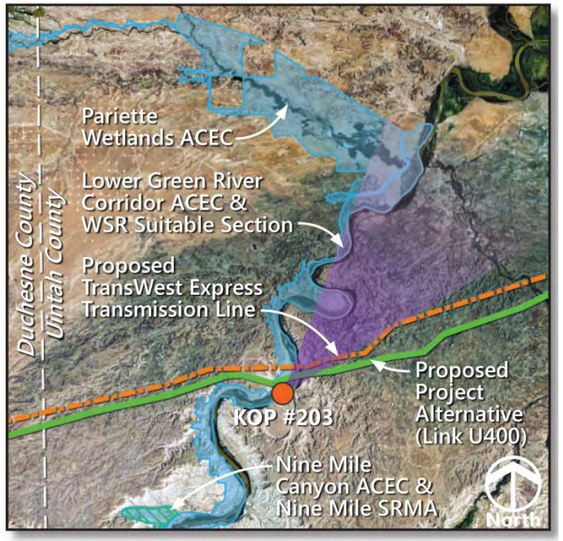

View Location: Approximate distance of proposed transmission line from photo location is 1.0 mile.

Simulated Condition – View of Alternatives COUT-C, COUT-H, and COUT-I, and the proposed TransWest Express transmission line

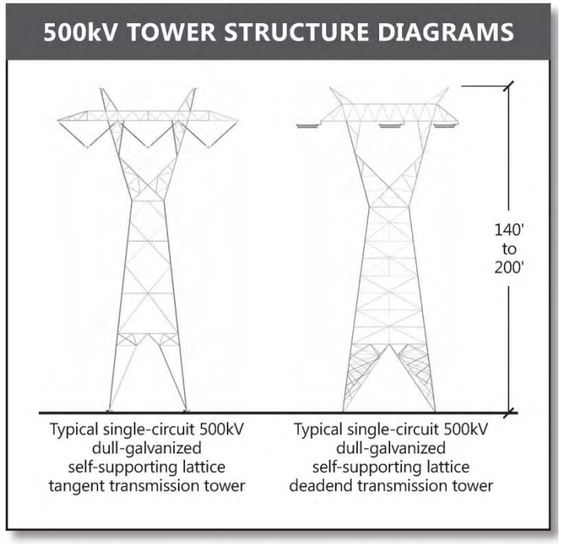

Photo Date and Time: July 25, 2012, 2:09 p.m. Focal Length: 50mm
The above simulation is intended to be viewed 16 inches from viewer's eyes when printed on 11x17 paper.

Energy Gateway South simulations were prepared using three-dimensional tower models and information provided by Rocky Mountain Power. Typical towers would range between 140 feet to 200 feet above ground with a span of 1,600 feet. Tower locations and heights may differ based on final engineering and design.

Cumulative effect simulations depicting the proposed TransWest Express project are conceptual and shown for reference only.

Final EIS and Proposed LUPAs for the Energy Gateway South Transmission Project

KOP #203 – Fourmile Bottom
Cumulative Effects

September 2015

Existing Condition – View looking southwest from residences west of Helper, Utah, toward BLM VRM Class III lands

View Location: Approximate distance to proposed transmission line from photo location is 0.2 mile.

Simulated Condition – View of Alternative COUT-H

500kV TOWER STRUCTURE DIAGRAM

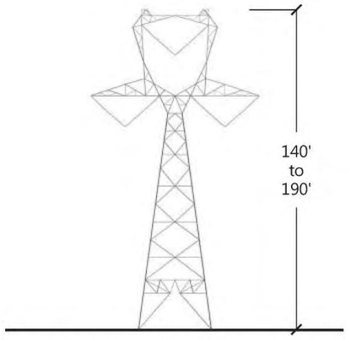

Typical single-circuit 500kV dull-galvanized self-supporting lattice tangent transmission tower

Tower heights shown in simulation vary between 160' and 180'

Final EIS and Proposed LUPAs for the Energy Gateway South Transmission Project

KOP #208 – West Helper Residences

Photo Date and Time: July 23, 2012, 1:44 p.m. Focal Length: 50mm
The original photographs were taken at 50mm, then stitched together to create this panorama, resulting in an 80-degree field of view.
The above simulation is intended to be viewed 16 inches from viewer's eyes when printed on 11x17 paper.

Simulations were prepared using three-dimensional tower models and information provided by Rocky Mountain Power. Typical towers would range between 140 to 190 feet above ground with a span of 1,200 feet. Tower locations and heights may differ based on final engineering and design.

September 2015

Existing Condition – View looking southwest from residences west of Helper, Utah, toward BLM VRM Class III lands

View Location: Approximate distance to proposed transmission line from photo location is 0.2 mile.

Simulated Condition – View of Alternative COUT-H and the proposed TransWest Express transmission line

500kV TOWER STRUCTURE DIAGRAM

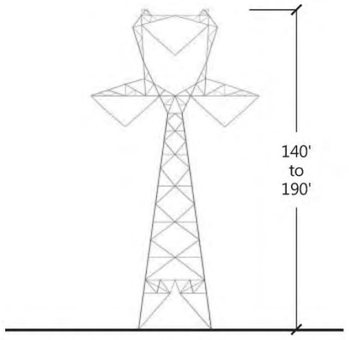

Typical single-circuit 500kV dull-galvanized self-supporting lattice tangent transmission tower

Tower heights shown in simulation vary between 160' and 180'

Photo Date and Time: July 23, 2012, 1:44 p.m. Focal Length: 50mm
The original photographs were taken at 50mm, then stitched together to create this panorama, resulting in an 80-degree field of view.
The Above simulation is intended to be viewed 16 inches from viewer's eyes when printed on 11x17 paper.

Energy Gateway South simulations were prepared using three-dimensional tower models and information provided by Rocky Mountain Power. Typical towers would range between 140 to 190 feet above ground with a span of 1,200 feet. Tower locations and heights may differ based on final engineering and design.

Cumulative effect simulations depicting the proposed TransWest Express project are conceptual and shown for reference only.

Final EIS and Proposed LUPAs for the Energy Gateway South Transmission Project

KOP #208 – West Helper Residences

Cumulative Effects

September 2015

Existing Condition – View looking southwest from the Dinosaur National Monument Visitor Center toward BLM VRM Class III lands

View Location: Approximate distance of proposed transmission line from photo location is 1.3 miles.

Simulated Condition – View of Alternatives COUT-A, COUT-B, and Colorado-Utah Border Variation 1

500kV TOWER STRUCTURE DIAGRAM

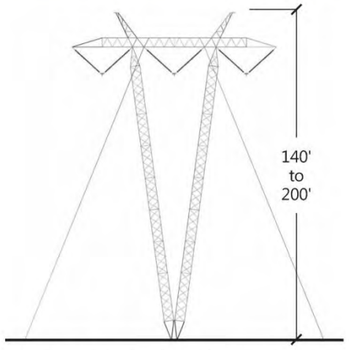

Typical single-circuit 500kV dull-galvanized guyed-V transmission tower

Photo Date and Time: September 26, 2011, 4:39 p.m. Focal Length: 50mm
The original photographs were taken at 50mm, then stitched together to create this panorama, resulting in a 58-degree field of view.
The above simulation is intended to be viewed 16 inches from viewer's eyes when printed on 11x17 paper.

Simulations were prepared using three-dimensional tower models and information provided by Rocky Mountain Power. Typical towers would range between 140 feet to 200 feet above ground with a span of 1,600 feet. Tower locations and heights may differ based on final engineering and design.

Final EIS and Proposed LUPAs for the Energy Gateway South Transmission Project

KOP #211a – Dinosaur National Monument Visitor Center

September 2015

Existing Condition – View looking southwest from the Dinosaur National Monument Visitor Center toward BLM VRM Class III lands

View Location: Approximate distance of proposed transmission line from photo location is 1.7 miles.

Simulated Condition – View of Alternatives COUT-C, COUT-H, and COUT-I

500kV TOWER STRUCTURE DIAGRAMS

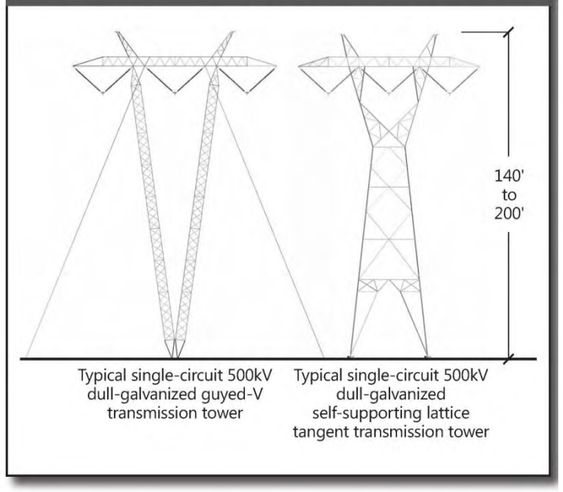

Photo Date and Time: September 26, 2011, 4:39 p.m. Focal Length: 50mm
The original photographs were taken at 50mm, then stitched together to create this panorama, resulting in a 58-degree field of view.
The above simulation is intended to be viewed 16 inches from viewer's eyes when printed on 11x17 paper.

Simulations were prepared using three-dimensional tower models and information provided by Rocky Mountain Power. Typical towers would range between 140 feet to 200 feet above ground with a span of 1,600 feet. Tower locations and heights may differ based on final engineering and design.

Final EIS and Proposed LUPAs for the Energy Gateway South Transmission Project

KOP #211b – Dinosaur National Monument Visitor Center

September 2015

Existing Condition – View looking southwest from the Dinosaur National Monument Visitor Center toward BLM VRM Class III lands

View Location: Approximate distance of proposed transmission line from photo location is 1.3 miles.

Simulated Condition – View of Alternatives COUT-A, COUT-B, and Colorado-Utah Border Variation 1 and the proposed TransWest Express transmission line

500kV TOWER STRUCTURE DIAGRAM

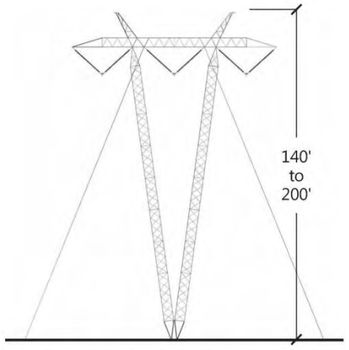

Typical single-circuit 500kV dull-galvanized guyed-V transmission tower

Photo Date and Time: September 26, 2011, 4:39 p.m. Focal Length: 50mm
The original photographs were taken at 50mm, then stitched together to create this panorama, resulting in a 53-degree field of view.
The above simulation is intended to be viewed 16 inches from viewer's eyes when printed on 11x17 paper.

Energy Gateway South simulations were prepared using three-dimensional tower models and information provided by Rocky Mountain Power. Typical towers would range between 140 feet to 200 feet above ground with a span of 1,600 feet. Tower locations and heights may differ based on final engineering and design.

Cumulative effect simulations depicting the proposed TransWest Express project are conceptual and shown for reference only.

Final EIS and Proposed LUPAs for the Energy Gateway South Transmission Project

KOP #211a – Dinosaur National Monument Visitor Center Cumulative Effects

September 2015

Existing Condition – View looking southwest from the Dinosaur National Monument Visitor Center toward BLM VRM Class III lands

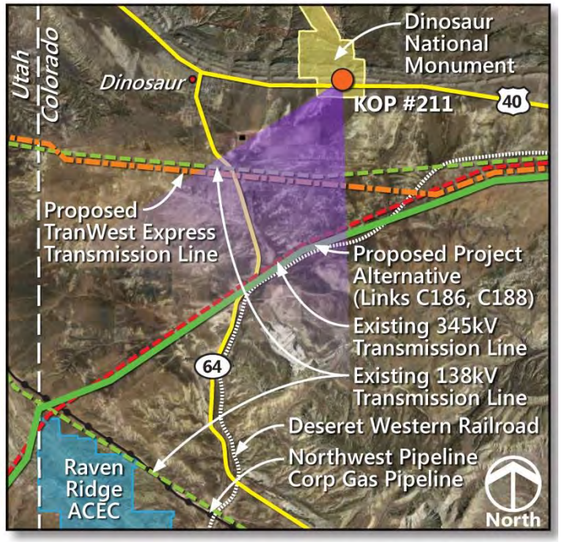

View Location: Approximate distance of proposed transmission line from photo location is 1.7 miles.

Simulated Condition – View of Alternatives COUT-C, COUT-H, and COUT-I and the proposed TransWest Express transmission line

500kV TOWER STRUCTURE DIAGRAMS

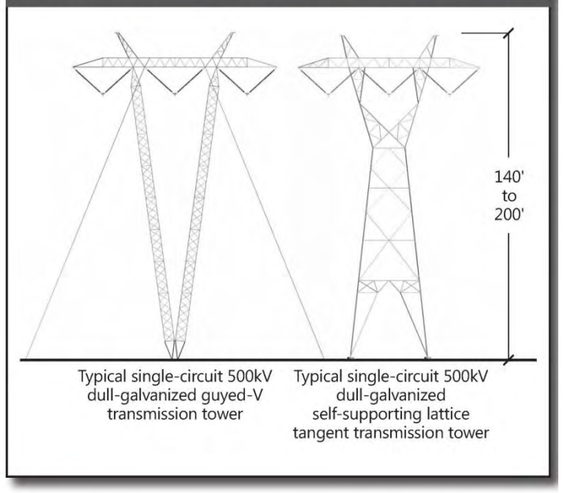

Photo Date and Time: September 26, 2011, 4:39 p.m. Focal Length: 50mm
The original photographs were taken at 50mm, then stitched together to create this panorama, resulting in a 53-degree field of view.
The above simulation is intended to be viewed 16 inches from viewer's eyes when printed on 11x17 paper.

Energy Gateway South simulations were prepared using three-dimensional tower models and information provided by Rocky Mountain Power. Typical towers would range between 140 feet to 200 feet above ground with a span of 1,600 feet. Tower locations and heights may differ based on final engineering and design.

Cumulative effect simulations depicting the proposed TransWest Express project are conceptual and shown for reference only.

Final EIS and Proposed LUPAs for the Energy Gateway South Transmission Project

KOP #211b – Dinosaur National Monument Visitor Center Cumulative Effects

September 2015

Existing Condition – View looking southwest from the Skyline Drive Scenic Backway in the Manti-La Sal National Forest toward an existing 345kV transmission line (not visible)

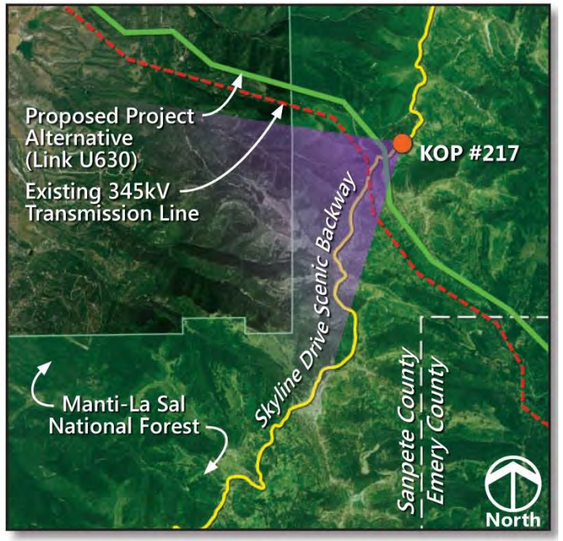

View Location: Approximate distance to proposed transmission line from photo location is 0.3 mile.

Simulated Condition – View of Alternatives COUT BAX-B, COUT BAX-C, and COUT-I

500kV TOWER STRUCTURE DIAGRAM

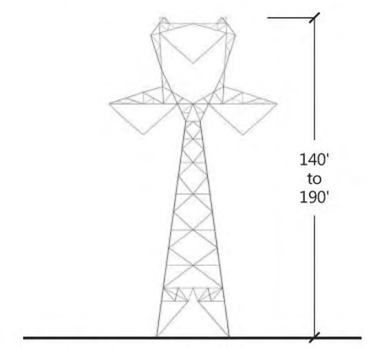

Typical single-circuit 500kV dull-galvanized self-supporting lattice tangent transmission tower

Tower heights shown in simulation vary between 160' and 180'

Final EIS and Proposed LUPAs for the Energy Gateway South Transmission Project

KOP #217 – Skyline Drive Scenic Backway

Photo Date and Time: September 27, 2011, 10:02 a.m. Focal Length: 50mm
The original photographs were taken at 50mm, then stitched together to create this panorama, resulting in a 82-degree field of view.
The above simulation is intended to be viewed 16 inches from viewer's eyes when printed on 11x17 paper.

Simulations were prepared using three-dimensional tower models and information provided by Rocky Mountain Power. Typical towers would range between 140 to 190 feet above ground with a span of 1,200 feet. Tower locations and heights may differ based on final engineering and design.

September 2015

Existing Condition – View looking southwest from the Skyline Drive Scenic Backway in the Manti-La Sal National Forest toward an existing 345kV transmission line (not visible)

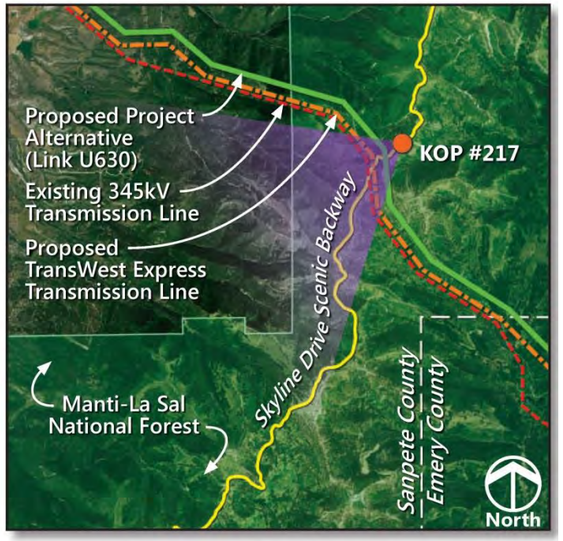

View Location: Approximate distance to proposed transmission line from photo location is 0.3 mile.

Simulated Condition – View of Alternatives COUT BAX-B, COUT BAX-C, and COUT-I and the Proposed TransWest Express transmission line

500kV TOWER STRUCTURE DIAGRAM

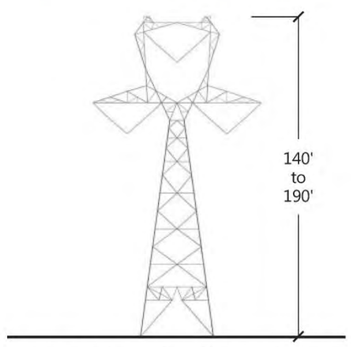

Typical single-circuit 500kV dull-galvanized self-supporting lattice tangent transmission tower

Tower heights shown in simulation vary between 160' and 180'

Photo Date and Time: September 27, 2011, 10:02 a.m. Focal Length: 50mm
The original photographs were taken at 50mm, then stitched together to create this panorama, resulting in a 82-degree field of view.
The above simulation is intended to be viewed 16 inches from viewer's eyes when printed on 11x17 paper.

Energy Gateway South simulations were prepared using three-dimensional tower models and information provided by Rocky Mountain Power. Typical towers would range between 140 to 190 feet above ground with a span of 1,200 feet. Tower locations and heights may differ based on final engineering and design.

Cumulative effect simulations depicting the proposed TransWest Express project are conceptual and shown for reference only.

Final EIS and Proposed LUPAs for the Energy Gateway South Transmission Project

KOP #217 – Skyline Drive Scenic Backway
Cumulative Effects

September 2015

Existing Condition – View looking north from Carbon County Road 347, adjacent to the North Platte SRMA, toward BLM VRM Class IV lands

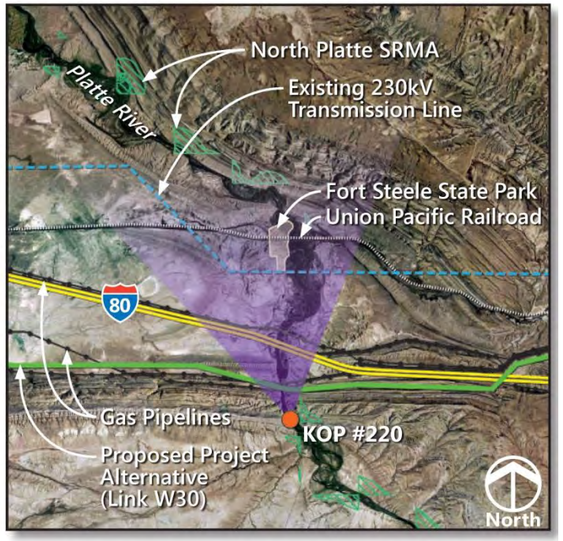

View Location: Approximate distance to proposed transmission line from photo location is 0.5 mile.

Simulated Condition – View of Alternatives WYCO-B, WYCO-C, WYCO-D, and WYCO-F

500kV TOWER STRUCTURE DIAGRAM

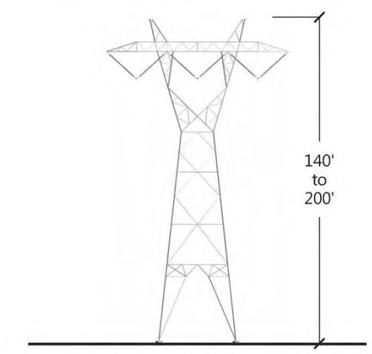

Typical single-circuit 500kV dull-galvanized self-supporting lattice tangent transmission tower

Final EIS and Proposed LUPAs for the Energy Gateway South Transmission Project

KOP #220 – North Platte River SRMA

Photo Date and Time: October 7, 2011, 10:09 a.m. Focal Length: 50mm
The original photographs were taken at 50mm, then stitched together to create this panorama, resulting in a 65-degree field of view.
The above simulation is intended to be viewed 16 inches from viewer's eyes when printed on 11x17 paper.

Simulations were prepared using three-dimensional tower models and information provided by Rocky Mountain Power. Typical towers would range between 140 feet to 200 feet above ground with a span of 1,600 feet. Tower locations and heights may differ based on final engineering and design.

Existing Condition – View looking north from Carbon County Road 347, adjacent to the North Platte SRMA, toward BLM VRM Class IV lands

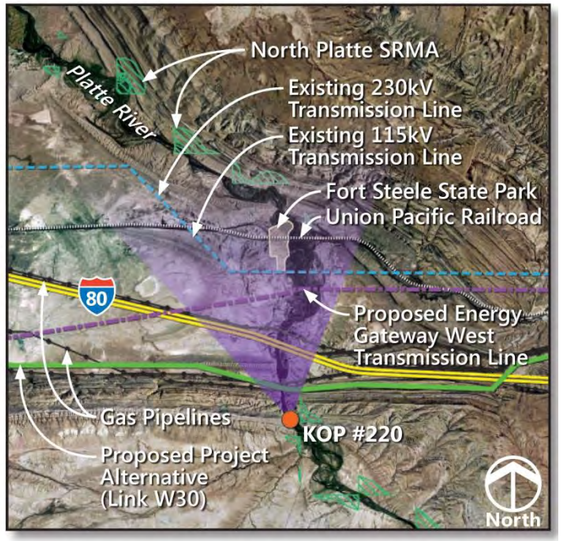

View Location: Approximate distance to proposed transmission line from photo location is 0.5 mile.

Simulated Condition – View of Alternatives WYCO-B, WYCO-C, WYCO-D, and WYCO-F and the proposed Energy Gateway West transmission line

500kV TOWER STRUCTURE DIAGRAM

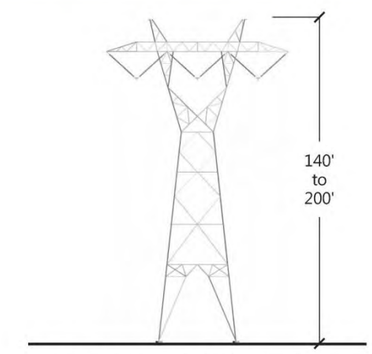

Typical single-circuit 500kV dull-galvanized self-supporting lattice tangent transmission tower

Photo Date and Time: October 7, 2011, 10:09 a.m. Focal Length: 50mm
The original photographs were taken at 50mm, then stitched together to create this panorama, resulting in a 65-degree field of view.
The above simulation is intended to be viewed 16 inches from viewer's eyes when printed on 11x17 paper.

Energy Gateway South simulations were prepared using three-dimensional tower models and information provided by Rocky Mountain Power. Typical towers would range between 140 feet to 200 feet above ground with a span of 1,600 feet. Tower locations and heights may differ based on final engineering and design.

Cumulative effect simulations depicting the proposed Energy Gateway West project are conceptual and shown for reference only.

Final EIS and Proposed LUPAs for the Energy Gateway South Transmission Project

KOP #220 – North Platte River SRMA
Cumulative Effects

September 2015

Existing Condition – View looking south from Wyoming Highway 789, north of Baggs, Wyoming, toward BLM VRM Class III lands

View Location: The proposed transmission line would be located adjacent to the photo location.

Simulated Condition – View of Alternative WYCO-D

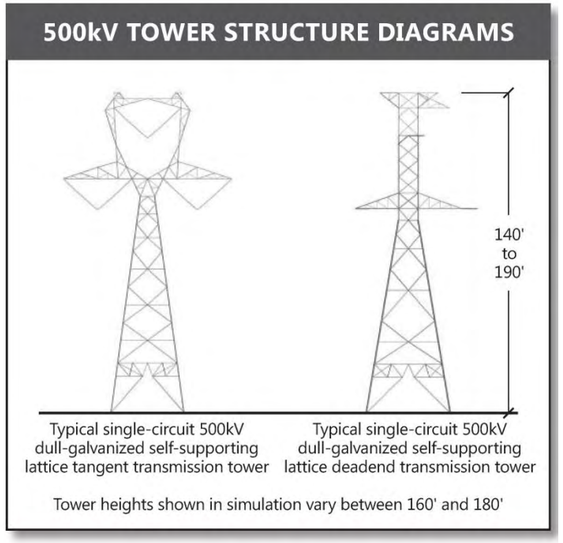

Photo Date and Time: October 11, 2011, 1:16 p.m. Focal Length: 50mm
The original photographs were taken at 50mm, then stitched together to create this panorama, resulting in a 50-degree field of view.
The above simulation is intended to be viewed 16 inches from viewer's eyes when printed on 11x17 paper.

Simulations were prepared using three-dimensional tower models and information provided by Rocky Mountain Power. Typical towers would range between 140 to 190 feet above ground with a span of 1,200 feet. Tower locations and heights may differ based on final engineering and design.

Final EIS and Proposed LUPAs for the Energy Gateway South Transmission Project

KOP #225 – Outlaw Trail Loop Scenic Drive (Wyoming Highway 789 North of Baggs)

September 2015

Existing Condition – View looking south from Wyoming Highway 789, north of Baggs, Wyoming, toward BLM VRM Class III lands

View Location: The proposed transmission line would be located adjacent to the photo location.

Simulated Condition – View of Alternative WYCO-D and the proposed TransWest Express transmission line

500kV TOWER STRUCTURE DIAGRAMS

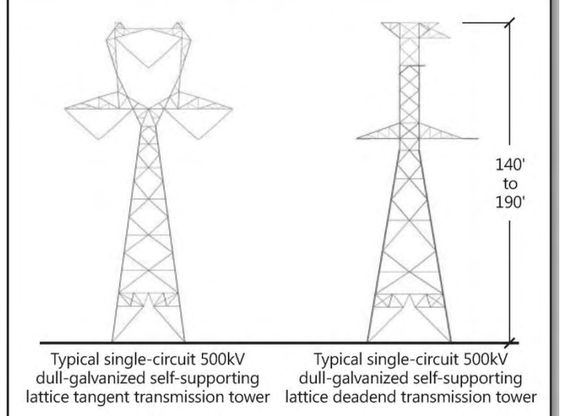

Photo Date and Time: October 11, 2011, 1:16 p.m. Focal Length: 50mm
The original photographs were taken at 50mm, then stitched together to create this panorama, resulting in a 50-degree field of view.
The above simulation is intended to be viewed 16 inches from viewer's eyes when printed on 11x17 paper.

Energy Gateway South simulations were prepared using three-dimensional tower models and information provided by Rocky Mountain Power. Typical towers would range between 140 to 190 feet above ground with a span of 1,200 feet. Tower locations and heights may differ based on final engineering and design.

Cumulative effect simulations depicting the proposed TransWest Express project are conceptual and shown for reference only.

Final EIS and Proposed LUPAs for the Energy Gateway South Transmission Project

KOP #225 – Outlaw Trail Loop Scenic Drive (Wyoming Highway 789 North of Baggs Cumulative Effects

September 2015

Existing Condition – View looking northeast from the Dinosaur Diamond Scenic Byway (Colorado State Highway 139) in the Canyon Pintado National Historic District within BLM VRM Class III lands

View Location: Approximate distance to proposed transmission line from photo location is 0.5 mile.

Simulated Condition – View of Alternatives COUT BAX-B, COUT BAX-C, and COUT BAX-E

500kV TOWER STRUCTURE DIAGRAM

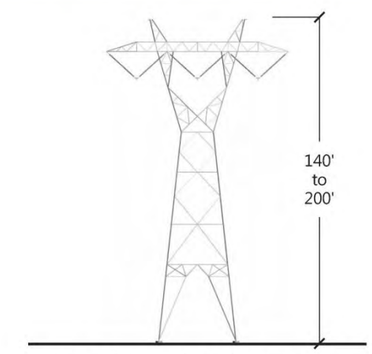

Typical single-circuit 500kV dull-galvanized self-supporting lattice tangent transmission tower

Photo Date and Time: October 3, 2011, 5:07 p.m. Focal Length: 50mm
The original photographs were taken at 50mm, then stitched together to create this panorama, resulting in a 45-degree field of view.
The above simulation is intended to be viewed 16 inches from viewer's eyes when printed on 11x17 paper.

Simulations were prepared using three-dimensional tower models and information provided by Rocky Mountain Power. Typical towers would range between 140 feet to 200 feet above ground with a span of 1,600 feet. Tower locations and heights may differ based on final engineering and design.

Final EIS and Proposed LUPAs for the Energy Gateway South Transmission Project

KOP #241 – Dinosaur Diamond in Canyon Pintado NHD (Colorado State Highway 139)

September 2015

Existing Condition – View looking north from Garfield County Road 201, adjacent to the Demaree Wilderness Study Area, toward BLM VRM Class III lands

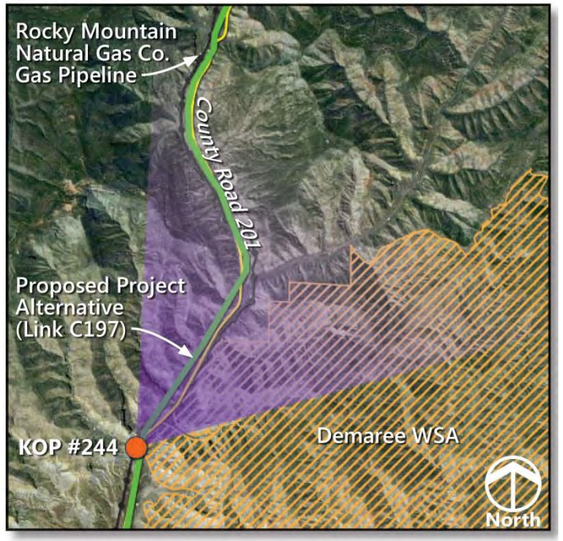

View Location: The photo location is adjacent to the proposed transmission line.

Simulated Condition – View of Alternatives COUT BAX-B, COUT BAX-C, and COUT BAX-E

500kV TOWER STRUCTURE DIAGRAM

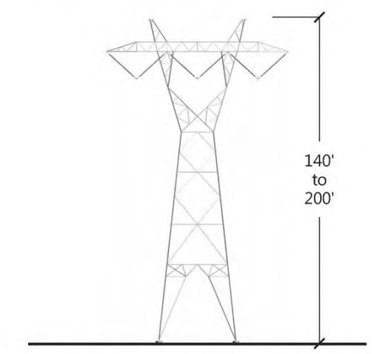

Typical single-circuit 500kV dull-galvanized self-supporting lattice tangent transmission tower

Photo Date and Time: October 11, 2011, 2:13 p.m. Focal Length: 50mm
The original photographs were taken at 50mm, then stitched together to create this panorama, resulting in a 72-degree field of view.
The above simulation is intended to be viewed 16 inches from viewer's eyes when printed on 11x17 paper.

Simulations were prepared using three-dimensional tower models and information provided by Rocky Mountain Power. Typical towers would range between 140 feet to 200 feet above ground with a span of 1,600 feet. Tower locations and heights may differ based on final engineering and design.

Final EIS and Proposed LUPAs for the Energy Gateway South Transmission Project

KOP #244 – Garfield County Road 201
(South of Baxter Pass)

September 2015