Appendix B

Proponents' Plan of Development

Plan of Development

Gateway West Transmission Line Project

Prepared By:

PacifiCorp
1407 W. North Temple
Salt Lake City, UT 84116

and

Idaho Power Company
1221 West Idaho Street
Boise, ID 83702

January 2013

TABLE OF CONTENTS

1.0 INTRODUCTION 1-1
2.0 PROJECT PURPOSE AND NEED 2-1
2.1 PacifiCorp (Rocky Mountain Power) 2-1
2.2 Idaho Power 2-2
2.3 Team Constructional and Operational Responsibilities 2-3
2.4 Federal Oversight of Transmission Planning 2-3
2.5 State Regulation of Transmission 2-5
2.6 Demand Side Management 2-5
2.7 Existing Transmission System Reliability Constraints 2-6
2.8 Purpose of the Gateway West Project 2-9
2.8.1 Gateway West Substation Purposes 2-10
2.8.2 Gateway West Transmission Line Segment Purposes 2-12
3.0 PROJECT DESCRIPTION 3-1
3.1 Overall Project 3-1
3.1.1 Proposed Project 3-2
3.1.2 Structure Lighting 3-14
3.1.3 Proposed Route 3-14
3.1.4 Segment 1W – Windstar/Dave Johnston to Aeolus 3-15
3.1.5 Segment 2 – Aeolus to Creston 3-16
3.1.6 Segment 3 – Creston to Anticline 3-17
3.1.7 Segment 3A – Anticline to Bridger 3-17
3.1.8 Segment 4 – Anticline to Populus 3-17
3.1.9 Segment 5 – Populus to Borah 3-19
3.1.10 Segment 6 – Borah to Midpoint 3-19
3.1.11 Segment 7 – Populus to Cedar Hill 3-20
3.1.12 Segment 8 – Midpoint to Hemingway 3-20
3.1.13 Segment 9 – Cedar Hill to Hemingway 3-21
3.1.14 Segment 10 – Midpoint to Cedar Hill 3-22
3.2 Substations 3-22
3.2.1 Proposed Substations 3-23
3.2.2 Existing Substations 3-26
3.3 Transmission Line Components 3-29
3.3.1 System Components 3-29
3.3.2 System Construction 3-31
3.3.3 Operations and Maintenance 3-31
3.3.4 Decommissioning 3-32
4.0 ENVIRONMENTAL PROTECTION PLANS 4-1
5.0 LITERATURE CITED 5-1

LIST OF TABLES

Table 2.7-1. Rating and Capacity of Paths with and without the Gateway West Project 2-7
Table 2.8-1. Substations to Be Connected by Gateway West.....2-11
Table 2.8-2. Gateway West Transmission Line Segments.....2-12
Table 3.1-1. Proposed Project Summary of Miles and Percent Crossed by Ownership 3-3
Table 3.1-2. Summary of Project Facilities 3-4
Table 3.1-3. Proposed Action Construction Schedule.....3-13
Table 3.1-4. Summary of Proposed Route.....3-14
Table 4-1. Environmental Protection Plans.....4-3

LIST OF FIGURES

Figure 3.2-1. CR 121 Access to Aeolus Substation 3-24
Figure 3.2-2. Looking Westerly Toward the Existing CR 121 Bridge.....3-25

LIST OF APPENDICES

Appendix A Proposed Route and Substation Maps and Figures
Appendix B Transmission Line and Substation Components
Appendix C Environmental Compliance Management Plan
Appendix D Framework Reclamation Plan
Appendix E Framework Noxious Weed Plan
Appendix F Framework Stormwater Pollution Prevention Plan
Appendix G Framework Construction Spill Prevention, Containment, and Countermeasures Plan
Appendix H Framework Plant and Wildlife Conservation Measures Plan
Appendix I Framework Stream, Wetland, Well, and Spring Protection Plan
Appendix J Framework Paleontological Resources Protection Plan
Appendix K Framework Agricultural Protection Plan
Appendix L Framework Traffic and Transportation Management Plan
Appendix M Framework Blasting Plan
Appendix N Framework Dust Control and Air Quality Plan

Appendix O	Framework Fire Prevention and Suppression Plan
Appendix P	Framework Hazardous Material Management Plan
Appendix Q	Framework Construction Emergency Preparedness and Response Plan
Appendix R	Framework Operations, Maintenance, and Emergency Response Plan

<Appendices S through Y do not exist>

Appendix Z	Environmental Protection Measures

ACRONYMS AND ABBREVIATIONS

AC	alternating current
ACEC	Area of Critical Environmental Concern
aMW	average megawatts
BES	Bulk Electric System
BLM	U.S. Bureau of Land Management
CR	County Route
Companies	PacifiCorp and Idaho Power Company
EIS	Environmental Impact Statement
EO	Executive Order
EPM	environmental protection measure
EPP	Environmental Protection Plan
FERC	Federal Energy Regulatory Commission
Forest Service	U.S. Forest Service
Gateway West	Gateway West Transmission Line Project
GIS	geographic information system
I	Interstate
IDANG	Idaho Army National Guard
IPUC	Idaho Public Utility Commission
IRP	Integrated Resource Plan
kV	kilovolt
MP	milepost
MW	megawatt
MWh	megawatt hours
NERC	North American Electrical Reliability Corporation
NF	National Forest
OATT	Open Access Transmission Tariff
POD	Plan of Development
Project	Gateway West Transmission Line Project
ROW	right-of-way
SR	State Route
SRBOP	Morley Nelson Snake River Birds of Prey National Conservation Area
SRMA	Special Recreation Management Area
VRM	Visual Resource Management
WECC	Western Electricity Coordinating Council
WGFD	Wyoming Game and Fish Department
WSR	Wild and Scenic River
WWE	West-wide Energy

1.0 INTRODUCTION

PacifiCorp (doing business as Rocky Mountain Power) and Idaho Power Company, collectively known as the Companies, applied to the Bureau of Land Management (BLM) for a right-of-way (ROW) grant to use the National System of Public Lands for portions of the Gateway West Transmission Line Project (Gateway West or Project) on May 7, 2007. The original application was revised in October 2007, August 2008, May 2009, and January 2010 to reflect changes and refinements in their proposed Project and in response to feedback from the public regarding routing alternatives. This application was assigned the case file numbers of IDI-35849 for Idaho, WYW-174598 for Wyoming, and NVN-089270 for Nevada. Because the BLM is no longer considering a route that crosses into Nevada, the Nevada application has been withdrawn.

The Companies are proposing to construct and operate approximately 990 miles of new 230-kilovolt (kV), 345-kV, and 500-kV alternating current (AC) electric transmission system consisting of 10 segments between the Windstar Substation at Glenrock, Wyoming, and the Hemingway Substation approximately 30 miles southwest of Boise, Idaho (see Appendix A, Figure A-1). Greater detail is shown for each segment in maps found in Appendix A, Figures A-2 through A-12. The proposed transmission line is needed to supplement existing transmission lines in order to relieve operating limitations, increase capacity, and improve reliability in the existing electric transmission grid, allowing for the delivery of up to 1,500 megawatts (MW) of additional energy for the Companies' larger service areas and to other interconnected systems. The Project includes ground-disturbing activities associated with the construction of above-ground, single-circuit transmission lines involving, access roads, multi-purpose yards, fly yards, pulling sites as well as associated substations, communication sites, and electrical supply distribution lines. The Project crosses private land and public lands administered by the Bureau of Land Management (BLM), U.S. Forest Service (USFS), other federal agencies, and the states of Idaho and Wyoming.

The Plan of Development (POD) is intended to serve several purposes. It describes the Project, including its purpose and need, details of its construction and operation, and lists the measures the Companies have taken and will take to avoid, minimize, and mitigate for environmental impact. It provides the details needed to support the Companies' application to the BLM and other agencies for rights of way or easements across lands managed by those agencies. The Companies intend that the BLM and other agencies use the details supplied in this POD to support the analysis for and the development of all needed permits for the construction and operation of the Project.

The POD is organized as follows:

Section 1—Introduction and organizational structure

Section 2—Purpose and need for the project

Section 3—Details of the project description, including construction and operation procedures and protocols

Section 4—Plans that detail the Companies' commitment to avoidance, minimization, and mitigation of environmental impact and the proposed means of accomplishing this commitment.

The purpose of this version of the POD and the SF-299 (filed February 29, 2012) is to further supplement and revise information previously submitted through January 2010 and to support the analysis and publication of the BLM's Final Environmental Impact Statement (FEIS) analysis and publication. This POD revises and supplements routes, substation descriptions, ROW and structure configurations, construction timeframes, and environmental protection plans contained in the January 2010 POD and SF-299. These revisions reflect responses to comments on the Draft EIS and further negotiations with stakeholders along the Project alignment. It provides revisions in Section 2 to clarify the Companies' purpose and need; revises the project description in Section 3, and provides new and revised environmental protection plans in Section 4 and in the appendices to the POD.

This POD revision is submitted after the BLM has indicated its preferred route. An additional planning-level POD may be issued to support additional contracting and permitting once the route to be permitted has been finalized, and a final Construction POD (also known as a Construction, Operation, and Maintenance Plan for the Forest Service) will be issued as part of the Companies' request to the various agencies for permission to proceed to construction.

2.0 PROJECT PURPOSE AND NEED

The proposed transmission line is needed to supplement existing transmission lines in order to relieve operating limitations, increase capacity, and improve reliability in the existing electric transmission grid, allowing for the delivery of up to 1,500 megawatts (MW) of additional energy for the Companies' larger service areas and to other interconnected systems. The Project is principally necessary to serve the Companies' customers, though other markets may also be served. While the earliest phase of the Project needs to be in service by 2018, each segment has its own construction schedule. A more detailed description of the route, design, and construction schedule is presented in Section 3.1.

Under Federal Energy Regulatory Commission (FERC) tariff requirements, utilities must plan, design, construct, operate, and maintain an adequate electric transmission system that meets not only the customers' energy demands (measured in megawatt-hours) but also meet the customer's peak load demands (measured in megawatts). Both are important in determining the need for the project.

2.1 PacifiCorp (Rocky Mountain Power)

PacifiCorp is an electric utility that transmits electricity via a grid of transmission lines located throughout a six-state region and a distribution system that serves more than 1.7 million retail customers. Rocky Mountain Power, a business unit of PacifiCorp, delivers electricity to approximately 1 million customers in Utah, Wyoming, and Idaho. As an essential service provider, Rocky Mountain Power is required to operate under the oversight and regulatory controls of the Public Service Commission of Utah, the Wyoming Public Service Commission, and the IPUC. Pacific Power, another business unit of PacifiCorp, provides service to approximately 730,000 customers in Oregon, Washington, and California, and is subject to the regulatory oversight of the Oregon Public Utility Commission, the Washington Utilities and Transportation Commission, and the California Public Utilities Commission. Although the objectives of these multiple commissions vary somewhat, they do share a common goal of ensuring utilities such as Rocky Mountain Power provide safe, reliable, adequate, and efficient delivery of electricity.

PacifiCorp's system peak-hour load is forecast to increase from 10,450 MW in 2011 to 12,609 MW in 2020, a 2.1 percent average annual growth rate. The Company's eastern system peak is expected to continue growing faster than its western system peak, with average annual growth rates of 2.4 percent and 1.4 percent respectively, over the forecast horizon. PacifiCorp's system-wide average customer load is also forecasted to grow at a 2.1 percent annual rate from 2011 to 2020, increasing from 63,131,000 MWh in 2011 to 76,137,000 MWh in 2020. This average forecasted growth rate is moderately higher than the average growth rate experienced from 1995 to 2005 when the average increase per year was 1.6 percent. PacifiCorp's three highest state loads—Oregon, Utah and Wyoming (included in the MWh loads above)—are forecasted to grow at a rate of 1.4 percent, 2.4 percent, and 2.9 percent, respectively, through the same 2011–2020 period (PacifiCorp 2011). PacifiCorp's customer base in Wyoming is anticipated to increase by approximately 340 MW in the same timeframe. The growth rate is reflective of all customer loads.

PacifiCorp is a public utility under the jurisdiction of the FERC. PacifiCorp is obligated to expand its transmission system to provide requested firm transmission service and to construct and place in service sufficient capacity to reliably deliver resources to customers requesting service and existing customers as provided in their OATT under Sections 15.4, 28.2, and 28.3

(FERC 2008). PacifiCorp's Attachment K of the OATT also requires planning for the expansion of the system to ensure that its transmission system meets industry, regulatory, and reliability standards.

2.2 Idaho Power

Idaho Power is a wholly owned subsidiary of IDA-CORP, a holding company. Idaho Power is responsible for providing electrical service to its service area, which includes most of southern Idaho and a portion of eastern Oregon. The number of customers in Idaho Power's service area is expected to increase from around 492,000 in 2010 to over 650,000 by 2030. Firm peak-hour load (the peak hourly electricity that the system must supply when demand is at its highest) has increased from 2,052 MW in 1990 to over 3,000 MW in 2006, 2007, 2008, and 2009. In June 2008, the peak-hour load reached 3,214 MW, which was a new system peak-hour record.

Average firm load (the average annual demand from customers) has increased from 10,500,000 megawatt hours (MWh) in 1990 to 15,800,000 MWh in 2008 (excluding Astaris/FMC) (IPC 2011). While the economic downturn is expected to depress customer demand for electricity in the near term, Idaho Power forecasts that their average-system load will continue to grow at about 1.4 percent per year (29 average MW [aMW] annually) over the 20-year planning period. During the same 20-year planning period, the peak-hour load is expected to increase at 1.8 percent per year (69 MW annually) (IPC 2011).

Idaho Power is a regulated public utility under the laws of the State of Idaho whose mission is to provide reliable, responsible, fair-priced energy. Idaho Power operates under the oversight and regulatory controls of the Idaho Public Utility Commission (IPUC). Under Title 61 of the IPUC regulations, Idaho Power "shall furnish, provide and maintain such service, instrumentalities, equipment and facilities as shall promote the safety, health, comfort and convenience of its patrons, employees and the public, and shall be in all respects adequate, efficient, just and reasonable."

Idaho Power is also a public utility under the jurisdiction of the FERC. Idaho Power is obligated to expand its transmission system to provide requested firm transmission service, and to construct and place in service sufficient capacity to reliably deliver resources to network and native load customers as provided in their Open Access Transmission Tariff (OATT) under Sections 15.4 and 28.3 (FERC 2008). Idaho Power's OATT requires planning for the expansion of the transmission system in order to provide network integration transmission services that complies with regulatory reliability standards.

Idaho Power's 2011 Integrated Resource Plan (IRP) divides the 20-year planning horizon into two 10-year segments. The first 10-year period is analyzed first (2011-2020), followed by the second 10-year period (2021-2030). Idaho Power customer needs are largely met in the first 10-year period with the construction of the Boardman to Hemingway transmission line project.

For the second 10-year period, ten resource portfolios were analyzed in the IRP and some of these portfolios required Gateway West transmission capacity to deliver energy to major load centers in southern Idaho while others did not. The need for Gateway West capacity in each of these portfolios was driven by the assumed locations of the resources in each portfolio.

While the selected portfolio for the second 10-year period was marginally able to deliver energy to major load centers without additional transmission capacity across southern Idaho, many of the other portfolios analyzed did require additional transmission capacity. The selection of resources in the second 10-year period is largely an academic exercise, and is likely to change substantially every two years when the IRP is updated.

Without adequate transmission capacity across southern Idaho, the Company's ability to site future generation resources will be limited. The long lead time required to permit, design and construct high voltage transmission simply will not allow new transmission capacity to be built in conjunction with the construction schedule of a new generation resource. Therefore, Idaho Power believes it is prudent to continue to pursue additional transmission capacity across southern Idaho through the Gateway West project.

2.3 Team Constructional and Operational Responsibilities

Rocky Mountain Power and Idaho Power signed an agreement in 2007 to approach permitting the Project as a team. That teaming agreement is still in place, though RMP has taken the lead in the place of Idaho Power in the permitting effort as of January 12, 2012. Rocky Mountain Power is responsible for the construction and operation of Segments 1 through 4. Construction and operation of Segments 5 through 10 is still under discussion and has not been resolved as of the date of this POD. When this information is known, it will be provided in an update to the POD.

2.4 Federal Oversight of Transmission Planning

The Companies are subject to federal and state oversight and regulation for the planning, construction, operation, and maintenance of their energy transmission system. Under the FERC's authority, the Companies are required to conduct transmission planning necessary to reliably serve their native load customers and conduct planning for third-party transmission service requests in compliance with its FERC-approved Open Access Transmission Tariff (OATT). Procedures and processes for transmission planning for network customers and for third-party requests is documented in OATT Section III- Network Integration Transmission Service and subsections 28 through 33. Gateway West, as part of the larger Energy Gateway concept, has been developed, engineered, designed and will be constructed to reliably deliver designated network resources to network customer loads, both today and long-term.

FERC Order 890 presently provides the transmission planning requirements for public utility transmission providers nationwide, including all public utility transmission providers within WECC. Through Order 890, FERC requires that transmission providers participate in local planning processes as well as sub-regional and regional planning processes. PacifiCorp and Idaho Power both participate in the Northern Tier Transmission Group (NTTG), which is a sub-regional planning group comprised of transmission providers and customers. PacifiCorp and Idaho Power are also active in WECC regional transmission planning committees and studies.

FERC issued Order 1000 in July 2011 with the requirement that public utility transmission providers make compliance filings on most of the issues by October 2012. The following is a summary of FERC Order 1000, as stated in the Order:

> "The Federal Energy Regulatory Commission is amending the transmission planning and cost allocation requirements established in Order No. 890 to ensure that Commission-jurisdictional services are provided at just and reasonable rates and on a basis that is just and reasonable and not unduly discriminatory or preferential. With respect to transmission planning, this Final Rule: (1) requires that each public utility transmission provider participate in a regional transmission planning process that produces a regional transmission plan; (2) requires that each public utility transmission provider amend its OATT to describe procedures that provide for the consideration of transmission needs driven by public policy requirements in the local and regional transmission planning processes; (3) removes from Commission-approved tariffs and agreements a federal right of first refusal for certain new transmission facilities; and (4) improves coordination between neighboring transmission planning regions for new interregional transmission facilities.

> Also, this Final Rule requires that each public utility transmission provider must participate in a regional transmission planning process that has: (1) a regional cost allocation method for the cost of new transmission facilities selected in a regional transmission plan for purposes of cost allocation; and (2) an interregional cost allocation method for the cost of certain new transmission facilities that are located in two or more neighboring transmission planning regions and are jointly evaluated by the regions in the interregional transmission coordination procedures required by this Final Rule. Each cost allocation method must satisfy six cost allocation principles."

NTTG members are in the process of identifying and modifying the existing compliance filings to address the requirements of Order 1000; however, it is believed that transmission planning process under the Order 1000 requirements will remain largely unchanged from the Order 890 requirements within the NTTG footprint. NTTG's current planning process evaluates the reliability of the transmission system 10 years into the future. Each load serving entity provides 10 year projections for load and generation. The load and resource projections serve as the basis for analysis. The adequacy of the existing transmission system is evaluated for the future projections. The adequacy of the future transmission system is then evaluated for various seasonal demand and generation scenarios with proposed transmission improvements.

An Order 1000 modification of note, as differentiated from Order 890 requirements, is that the NTTG regional transmission plan must identify transmission facilities that "more efficiently or cost-effectively" meet the region's reliability, economic and Public Policy Requirements. In other words, a project's relative benefit and cost will now be analyzed as part of the transmission planning process, and the transmission plan (a single plan) will be a compilation of proposed projects that most "efficiently and cost-effectively" meet a region's needs.

The Gateway West project is one of the projects in the 2011 NTTG Biennial Transmission Plan and will most certainly be included in the 2012-2013 NTTG regional planning process. Once NTTG adopts the requirements of Order 1000, the transmission planning process will evaluate the efficiency and cost effectiveness of projects within the plan and consider any proposed alternatives that may address regional needs more efficiently or cost effectively than the projects proposed by the transmission providers in local transmission plans. It is too early to predict the Order 1000 implications on the Gateway West project with much certainty; however, Order 1000 will not undermine the previously established load service need that the project is intended to address.

FERC granted the Company incentive rate treatment, but equally important, the commission issued a 4-0 decision in which FERC stated:

> "…we find that PacifiCorp has adequately demonstrated that the Project (with the exception of segment A) will ensure reliability and reduce transmission congestion… We find that segments B through H of the Project would establish for the first time a backbone of 500 kV transmission lines in PacifiCorp's Wyoming, Idaho and Utah regions. This would provide a platform for integrating and coordinating future regional and sub-regional electric transmission projects being considered in the Pacific Northwest and the Intermountain West, connection existing and potential generation to loads in an efficient manner, thus reducing the cost of delivered power. Also, the Petition cites the 2006 DOE National Electric Transmission Congestion Study and the 2004 Rocky Mountain Area Transmission Study in stating that that proposed Project will reduce congestion or maintain reliability in the Western Interconnection. Additionally, the project would establish a direct link between PacifiCorp's east and west control areas, providing numerous benefits including increasing transfer capability, reducing the need for curtailments, and reducing transmission congestion."

WECC 10-Year Regional Transmission Plan was approved by the WECC Board of Directors September 22, 2011 and Plan Summary can be found at: (http://www.wecc.biz/library/StudyReport/Documents/Plan_Summary.pdf). Energy Gateway, including

Gateway West, is an integral part of the Foundational Transmission Project identified for the Regional Plan as shown in Section 3.2.3-Transmission. Independent stakeholders involved in data input, development and review of the plan are identified in Section 6-Organizations Involved in Development of the Plan.

2.5 State Regulation of Transmission

The state commissions involved in the review of Gateway West are Utah, Wyoming, Idaho, Oregon, California and possibly Washington. These are the states where the Companies serve retail customers. Each state has approved regulatory processes to review and determine the prudence and usefulness of any investment made on behalf of the Companies' 2.2 million customers. Although each state has slight variations in the regulatory process, essentially approval of investments occurs in the following two steps.

1. Each company files for a Certificate of Public Convenience and Necessity (CPCN) in the states physically impacted by the investment. For Gateway West, the Companies will file in Idaho and Wyoming. This process determines that an investment proposed by the Company is in the public interest and is necessary to provide safe, adequate and reliable electric service. The Companies will initiate this process when the BLM publishes the final EIS.

2. The Companies file for cost recovery of an investment through a rate case. This step occurs after the investment is made and the respective project is constructed and placed in service. This review focuses on prudence of project alternative selection, cost control, customer benefits and usefulness of the facilities resulting from the investment. Funds expended in advance of this prudency review and rate change approval by each state are 'at risk' as transmission projects are rarely "preapproved" by the states before they are initiated. There is no uniform pre-approval process for investments or for approval of project development investments in all states.

These regulatory processes change occasionally to facilitate additional and more comprehensive review by commissions and stakeholders. As an example, Rocky Mountain Power agreed in its recent 2010 Wyoming rate case settlement to provide additional justification for Gateway West and other Gateway segments through future regulatory filings in Wyoming. This will give the Wyoming commission and Wyoming customers additional information and insight into the need and benefits of these transmission investments prior to the Companies initiating construction. PacifiCorp sees this as a positive development for the company, the commission and customers.

In support of this two-step process the Companies engage in a series of regional activities to inform commissions and stakeholders about its projects, their purpose and need and investment requirements. The IRPs are examples of this informational process. As regulated utilities, both Idaho Power and Rocky Mountain Power are required to produce and periodically update an IRP for each state in which they operate, with the exception of Wyoming. The Public Utilities Commissions of the states where these utilities operate review and acknowledge these IRPs and their updates.

2.6 Demand Side Management

Part of the planning process that results in the IRPS and their updates includes addressing conservation and other means of reducing or controlling the growth of the demand for electricity among the utilities' customers. When the Public Utilities Commission for a given state acknowledges the IRP, it is agreeing that the balance of demand-side measures and

development of additional generation resources, including associated transmission, is appropriate to meet the needs of the customers of its state while complying with the various laws and regulations on renewable energy requirements, carbon emissions, and other energy-related issues.

The Companies have detailed their demand-side management in their respective IRPs, which have been acknowledged by the Public Utilities Commissions for which they were written (RMP 2011; IPC 2011).

2.7 Existing Transmission System Reliability Constraints

Transmission systems in the United States must be planned, operated, and maintained under the North American Electrical Reliability Corporation (NERC)[1] reliability performance standards. These mandatory national standards govern the level of performance and reliability of the Bulk Electric System (BES) operated within the United States. Additionally, the Companies are governed by the Western Electricity Coordinating Council (WECC)[2] policy procedures, criteria, and standards that may be more stringent than those required by NERC. In compliance with the above standards, transmission systems must be planned, designed, built, and continually operated with sufficient levels of redundancy to enable the transmission system to reliably operate in the event of the loss of any single element (i.e., generation unit, transmission line segment or substation equipment) or loss of multiple elements, thereby providing adequate service to Customers and to other interconnected utilities. Adding new transmission facilities to a network provides not only new transmission capacity but also levels of backup to each other during outage conditions when elements of the system are taken out of service during both planned and unplanned events.

Transmission paths consist of single lines or combinations of lines operated together as a single transmission unit to maximize capacity of the system and to maintain reliability. Path capacities are usually limited by the line in the path with the least capacity. The capacity ratings of the paths are based on maintaining established reliability criteria. The existing path capacity "bottlenecks" and how the path rating will increase with the Gateway West segments in place are shown Table 2.7-1.

[1] NERC's mission is to improve the reliability and security of the bulk power system in North America. To achieve that, NERC develops and enforces reliability standards; monitors the bulk power system; assesses future adequacy; audits owners, operators, and users for preparedness; and educates and trains industry personnel. NERC is a self-regulatory organization that relies on the diverse and collective expertise of industry participants. As the Electric Reliability Organization, NERC is subject to audit by the FERC and governmental authorities in Canada (NERC 2012).

[2] WECC and the nine other regional reliability councils were formed due to national concern regarding the reliability of the interconnected bulk power systems, the ability to operate these systems without widespread failures in electric service, and the need to foster the preservation of reliability through a formal organization. The Western Interconnection encompasses a vast area of nearly 1.8 million square miles. It is the largest and most diverse of the eight regional councils of the NERC. WECC's territory extends from Canada to Mexico. It includes the provinces of Alberta and British Columbia, the northern portion of Baja California, Mexico, and all or portions of the 14 western states in between (WECC 2011).

Table 2.7-1. Rating and Capacity of Paths with and without the Gateway West Project

Path Name [2/]	Path Rating Limit (Present Operational Maxima) (MW)	Existing Available Transmission Capacity (MW)	Proposed Gateway West Parallel Segments [1/]	Planned Rating/Capacity Increase from Gateway West (MW)	Proposed Path Rating/Capacity with Gateway West (MW)
TOT 4A (WY Northeast to WY Central)	937	0	Segments 1W Windstar-Aeolus	838	1,775
Aeolus West (WY Central to WY Southwest)	NA	NA	Segments 2 and 3, Aeolus-Anticline plus existing lines	2,670	2,670
Bridger West	2,400	0	Segment 4 Jim Bridger-Populus	1,700	4,100
Borah West	2,557	0	Segments 5, 6, and 7 Populus-Borah, Borah-Midpoint, and Populus-Cedar Hill	1,893	4,450
Midpoint West	2,287	0	Segments 8, 9 and 10 Cedar Hill-Midpoint, Midpoint-Hemingway and Cedar Hill-Hemingway	2,113	4,400

1/ Refer to Figure A-1 for segments and substations.
2/ Each of the paths listed in Table 2.7-1 is part of the Gateway West Project and is dependent on the others to move power from east to west (Wyoming to Idaho).

In siting new transmission facilities, the Companies are obliged to be prudent and site and install facilities to avoid a potential “common mode failures” where system element failures or outages can impact other elements during a single outage event (lines adjacent to each other on a common transmission tower or two parallel transmission lines in close proximity to each other). Common mode failures include, but are not limited to, a snagged lighting protection shield wire from one line being dragged into the adjacent line, an aircraft flying into more than one line, smoke from a fire across the ROW shorting out more than one line, lightning strikes affecting more than one line, high winds, dust storms, ice storms, blizzards, landslides, earthquakes, vandalism, and equipment failure.

As a minimum requirement, NERC/WECC reliability performance standards require that a multiple contingency analysis (an analysis of the simultaneous failure of two adjacent lines) must be performed to evaluate the BES impact resulting from the loss of multiple transmission lines to the remaining transmission system. For the Gateway West analysis, the electrical power flowing on the two transmission lines, once removed from service, must now flow across the remaining transmission system in the area and subsequently overloads portions of the remaining system or the electric system enters an unstable operating state and shuts down. The useable system capacity limit is consequently reduced to protect the remaining system from this overload or unstable operating condition.

When transmission lines are separated from each other, common mode failures pose a significantly reduced risk and the NERC/WECC reliability standards only requires evaluation of one line out of service at a time. Constructing transmission lines physically separated from each other allows the Companies to operate their interconnected electric system at a higher electrical capacity than would otherwise be possible. The net result of line separation is that fewer transmission lines are needed overall to adequately serve Customers' energy needs.

Due to the high transfer capacity requirements necessary for the Gateway West Project, high-capacity lines must be located on separate corridors to increase reliability and to provide the highest capacity possible.

The WECC Board of Directors approved a regional transmission planning criterion (TPL [001-004]-WECC-1-CR), on April 18, 2008. This planning criterion specifies that utilities must plan for two lines to be out of service at the same time if they are located adjacent to each other unless those lines are separated by at least "the longest span length of the two transmission circuits at the point of separation or 500 feet, whichever is greater, between the transmission circuits" (WECC 2008). This criterion has subsequently been revised, but the initial siting study for Gateway West was based on this criterion.

In that study, the longest span was assumed to be 1,500 feet, thereby dictating the minimum distance between existing and proposed transmission lines. In the final design, the separation distance could increase where existing line spans are determined to be greater than 1,500 feet thereby requiring Gateway West to be located the maximum span distance away when adjacent to longer spans. This criterion in itself does not guarantee transmission system reliability or future system performance. Utilities are expected to use their history of experience and prudent judgment in planning, siting, and designing transmission systems to ensure the reliability of the interconnected grid. Utilities can and do elect to provide wider separation or select an alternate transmission line route to reduce the risk of multiple line outages along common routes used by high-capacity lines.

The recent WECC revision of this criterion affects only one of many criteria that need to be considered when planning transmission projects. Specifically, WECC has relaxed its definition of a common corridor from the greatest span or 500' from an existing line to a minimum of 250' from an existing line. The remaining criteria still obligate a transmission provider to take into consideration the potential impacts to reliability. For Gateway West, the originally planned minimum separation is still needed when taking into consideration potential impacts to reliability of siting the proposed project closer than the span distance of that adjacency. The Companies' approach remains the same, and consistent with others, who have stated that 'by far the most cost effective preemptive strategy against multiple simultaneous line loss involves ensuring adequate distance separation between lines at the planning stage' (West Wide Energy Corridor EIS, ANL 2008).

Even though the WECC separation criterion has been revised, the WECC/NERC requirements to provide reliable electricity have remained the same. Acts of nature such as fires or micro bursts or other acts such as vandalism or required fire suppression management may impact the reliability of the bulk transmission system if lines are sited in close proximity. Common corridor outages, in particular outages caused by smoke and fire, are prevalent through the open areas of Wyoming and Idaho. During the drier parts of the year, fires can ignite and move extremely fast. When heavy smoke rises to the level of the conductors, the air between the conductors loses some of its insulation properties, and the conductor will begin to conduct electricity to ground, or "fault"; protective instrumentation will disconnect the transmission line from the electrical system. If Gateway West transmission lines are constructed close to other

transmission lines and the two lines disconnect in rapid succession, major problems may result for the electrical grid, potentially leading to wide-spread outages (area blackouts).

There have been numerous occurrences of fire, wind, geological and other related corridor outages. If a major event did occur, preparation for a future similar outage would likely be mandated. The first step toward preparing for a similar occurrence would be to reduce the rating and capacity of the facilities, resulting in a project that is vastly inferior to the purpose and need. For example, following the WECC west wide disturbance in 1996 PacifiCorp was required to make a significant reduction in transmission system capacity ratings on its WECC rated Path C between southeast Idaho and northern Utah. A significant system capacity reduction, from 1,000 MW to 600 MW, was a direct result of the disturbance investigation by WECC, to reduce the stress on the system and gain more reliability. As a result PacifiCorp constructed the Populus to Terminal transmission line to restore reliability. The project sponsors believe the first step to avoid a common corridor outage is to locate the lines as far apart as feasibly possible, without creating additional undue impact to the environment and surrounding areas. Forcing the Gateway West project into close proximity to other lines undermines the overall purpose and need of the project.

If BLM were to consider an alternative for Gateway West that studied the consequences of siting the proposed Gateway West only 250 feet from existing transmission in one or more corridors along the proposed Project route, the Companies could not build that alternative because it would not meet minimum standards for reliability. The Companies received WECC approval to carry the proposed load found in the Purpose and Need for the Project based on the average separation distance, among several other factors, for the proposed Gateway West alignment.

There were several instances where outages on systems operated by the Companies and others have led to serious consequences. In 2007, a fire burned through the Jim Bridger transmission line ROW resulting in an outage of all three 345-kV lines and three of the four Jim Bridger generating units (Gerrard 2010). Also in 2007, a fire caused the Mona – Huntington and Mona – Bonanza 345-kV lines in Central Utah to de-energize (Gerrard 2010). In California, two adjacent 500-kV line towers failed in 2005, leaving an estimated 5.2 million customers in California, Nevada, Oregon, and Texas without power (California ISO Corporation 2005).

To further ensure reliability requirements are met, the Companies have proposed that a permanent service road to each transmission structure be retained (see Appendix B, Section 2.5, for further detail) to control vegetation in the ROW for safe operation and for periodic inspections and maintenance (IPC and RMP 2011).

2.8 Purpose of the Gateway West Project

This Project is designed to provide for the delivery of up to 1,500 MW to the service areas of the Companies and possibly other markets. From Windstar to Populus, Gateway West will deliver up to 1,500 MW of primarily wind energy for transmission to markets south and west of Populus, including the Wasatch Front.

Idaho Power forecasts a peak-hour load growth of 69 MW per year over the next 10 years. PacifiCorp forecasts the megawatt-hour growth between 2010 and 2019 for Utah, Wyoming, and Oregon will be 6.8 million, 3.7 million, and 1.1 million megawatt-hours, respectively. These forecasts are based on the IRPs prepared by each company as required to fulfill the regulatory requirements and guidelines established by the public utilities commissions of the states served by the Companies (PacifiCorp 2011; IPC 2011). Each IRP addresses the obligations of each

company pursuant to its OATT to plan for and expand its respective transmission systems in a non-discriminatory manner based on the needs of its native load customers, network customers, and all eligible customers that agree to expand their transmission systems. This includes entities that generate or plan to generate electricity, including coal-fired, natural-gas-fired, and renewable energy sources (biogas, wind, and geothermal).

The Bonneville Power Administration (BPA) supplies wholesale power to six utilities (two towns and four rural cooperatives) in Southeast Idaho. Until recently, a portion of that power has come from PacifiCorp and a portion from BPA's hydroelectric facilities. PacifiCorp has given BPA a five-year notice that it will no longer supply power under the old agreement. Therefore, by 2017, BPA must come up with another source of power for its six small utility clients in Southeast Idaho. As a part of future planning, BPA has entered into an agreement with PacifiCorp and Idaho Power to help fund the permitting of the Boardman to Hemingway (B2H) project and to consider the possibility of asset swaps in the future.

BPA is considering six alternatives to provide that power:

- Power Purchase with OATT Service
- B2H with OATT Service
- B2H with Transmission Asset Swaps
- MSTI with Tap to Goshen Substation
- Two BPA Construction Scenarios from Montana to SE Idaho

The second alternative depends upon the capacity of Gateway West through Idaho as well as on the completion of B2H. The other options do not depend upon the completion of the Gateway West project. BPA conducted a public comment period on these options which closed August 27, 2012. BPA must still conduct a NEPA analysis on its options to supply power to its Southeast Idaho customers, which has not yet started (BPA 2012). In October 2012, the BPA announced that it had selected the B2H with Transmission Asset Swaps as its top priority for pursuit. While BPA is not ruling out the other options, it is less likely that BPA will select the second alternative that depends upon the capacity of Gateway West through Idaho (BPA 2012a).

Gateway West is independent of, and will be built regardless of, any particular new generation project. The transmission grid of which it will become a part can be thought of in terms of hub and spokes, with a backbone connecting to the hubs. Each substation is a hub and receives or sends electricity along the spokes. For this system to work, a backbone of high-capacity transmission lines is needed to connect the hubs and transport the electricity from where it is or can be generated (in this case, mostly Wyoming but also Idaho), to where it is needed (in this case, mostly Idaho and Utah, though other markets may also be served).

2.8.1 Gateway West Substation Purposes

This Project proposes to connect 12 substations, which are essential control points for the route. These are illustrated in Appendix A, Figure A-1, and in subsequent maps by segment. The purposes of the individual substations to support the need for the overall location of the Gateway West Project are displayed in Table 2.8-1. Nine of the substations are in service now and three are proposed as part of this Project.

Table 2.8-1. Substations to Be Connected by Gateway West

Substation	Description	Purpose
Windstar	Existing: interconnection and generation-driven	The purpose of this substation is to integrate future wind and thermal resources with the existing transmission system by adding one existing 230-kV transmission line into the substation. The Gateway West Project starts at this substation because of the recent large development of nearby energy sources needing transmission to points west, including 200 MW integrated at the Windstar 230-kV Substation, Glen Rock 1 & III – 138.5 MW, Rolling Hills – 99 MW, Three Buttes – 99 MW, and Casper Wind – 17 MW.
Dave Johnston Power Plant	Existing: interconnection and generation-driven	Work inside the existing 230kV yard will consist of rebuilding bus breakers and switches to increase capacity to match the rebuilt 1W(c). No ground-disturbing activity or expansion of the fence line will be needed.
Heward	Existing : interconnection-driven	The existing Difficulty substation will be expanded. The expanded portion is given a new name because ownership is different. Difficulty must be kept in service while Segment 1W(c) is reconstructed, requiring the additional bus construction to be conducted adjacent to the existing substation. Construction of Heward will allow PacifiCorp to control the operation of the new buses, essential for reliability of the reconstruction.
Shirley Basin	Existing: interconnection-driven	Shirley Basin is an existing interconnection point for an existing wind energy facility. 1W(c) must interconnect here during the reconstruction of the line and the communication system must be improved. However, there will be no expansion of the fence line and no ground disturbance anticipated.
Aeolus	Proposed : part of Gateway West, generation-driven	This substation is intended to serve high wind areas identified in portions of Wyoming and will be the location for interconnecting new wind-driven sourced energy. The Aeolus 230-kV substation will be integrated into the RMP transmission system by looping the Dave Johnston – Heward – Shirley Basin – Miners 230-kV line into Aeolus. Aeolus will be used to interconnect future wind generation projects.
Anticline	Proposed: part of Gateway West, generation-driven	The new transmission lines will interconnect to the existing transmission system in the vicinity of the Jim Bridger Power Plant by constructing a new substation nearby. The purpose of the proposed substation is to support the existing thermal generation hub as well as an expanded hub for new wind resources expected to be sited in the area.
Jim Bridger Power Plant 345-kV	Existing: interconnection and generation-driven	This substation will be expanded to connect the Jim Bridger Power Plant with a new transmission line. No new generation will be added at the Jim Bridger Power Plant as a result or as part of this Project.
Populus	Existing: interconnection and generation-driven	This substation will interconnect with the proposed Gateway West 500-kV transmission lines, the existing Jim Bridger West 345-kV system, and the 345-kV transmission lines running north-south. The north-south 345-kV transmission lines (not part of Gateway West) begin at the Populus Substation (near Downey, Idaho), run south to the Wasatch Front1/, and transport new resources south to the Wasatch Front demand centers.
Borah	Existing: interconnection and load-driven	The substation expansion will allow the interconnection of new 500-kV transmission lines between Populus and Midpoint, as well as a new termination of a 345-kV line to Kinport.
Midpoint	Existing: interconnection and load-driven	The substation expansion will allow interconnection of new transmission lines from Cedar Hill and Hemingway and allow for the existing 345-kV transmission line between Borah and Midpoint Substations to be energized at 500 kV, thereby creating a continuous 500-kV system expansion and reliability tie with the Cedar Hill Substation

Table 2.8-1. Substations to be Connected by Gateway West (continued)

Substation	Description	Purpose
Cedar Hill	Proposed: part of Gateway West, load-driven	The substation serves two purposes: 1) a reliability tie between the proposed Gateway West north and south transmission lines, and 2) a 500-kV to 230-kV transformation station for serving the Magic Valley load. This will complement the existing service from Midpoint to the north of the Magic Valley. The Magic Valley Electrical Plan is under development, with this station being considered as a future source to the valley.
Hemingway	Existing; interconnection and load-driven	The substation expansion will serve as an interconnection point for the Gateway West, Summer Lake, Boardman, and Captain Jack transmission lines. The station itself currently serves the Treasure Valley load. The station is the southwestern 500-kV to 230-kV transformation point in the Treasure Valley 500-kV loop, as defined in the Treasure Valley Electrical Plan. The Hemingway Substation is the western terminus of the Gateway West Project because it is the major load point for the generation resources brought in from the east, primarily Wyoming.

1/ About 75 to 80 percent of all of the electricity use in the state of Utah is in the area known as the Wasatch Front. This area includes the entire electrical load served out of the Spanish Fork Substation in the south up to the electrical load served out of the Ben Lomond Substation in the north. This includes parts of Juab and Sanpete Counties, and all of Utah, Salt Lake, Summit, Tooele, Wasatch, Davis, Morgan, and Weber Counties.

2.8.2 Gateway West Transmission Line Segment Purposes

Table 2.8-2 summarizes the purpose for each of the segments of Gateway West. Each segment's Project description is presented in detail in Section 3.

Table 2.8-2. Gateway West Transmission Line Segments

Transmission Line Segment	Purpose
Segment 1W—Windstar to Aeolus, single-circuit 230-kV and Dave Johnston to Aeolus , rebuilt 230-kV line	Transport existing and new resources to load centers farther west via interconnection at Aeolus Substation. This line also represents the Companies' portion of a future 230-kV network of lines that are required to integrate other projects in areas of high wind potential.
Segment 2—Aeolus to Creston[1/], single-circuit 500-kV line	Transport new resources to load centers farther west.
Segment 3—Creston[1/] to Anticline, single-circuit 500-kV line	Transport new resources to load demand centers farther west.
Segment 3A—Anticline to Jim Bridger 345-kV	Provide for bidirectional transfer of power and integration of the Gateway West project by providing an intermediate tie line with the existing EHV system at Jim Bridger Substation.
Segment 4—Anticline to Populus, single-circuit 500-kV line	Transport new resources to load demand centers farther west and interconnect with existing systems.
Segment 5—Populus to Borah, single-circuit 500-kV line	Transport Wyoming energy resources from Populus to loads in southern Idaho and the Pacific Northwest. Additionally, this line will transport Pacific Northwest sourced energy to Populus to serve load in the Salt Lake City metropolitan area. Provides physical separation to meet reliability criteria between a northern route (Populus – Borah – Midpoint – Hemingway) and a southern route (Populus – Cedar Hill – Hemingway). Physical separation is needed due to existing transmission line congestion (multiple lines in the same area) and wildland fires resulting in outages.
Segment 6—Borah to Midpoint, energize existing 345-kV line to 500 kV	Increase the capacity of the existing line to transport existing and new energy resources in the service areas of the two Companies. Replace or reconfigure up to five spans at each end to accommodate new connections in substations to new 500-kV bays. No new transmission line construction

Table 2.8-2. Gateway West Transmission Line Segments (continued)

Transmission Line Segment	Purpose
Segment 7—Populus to Cedar Hill, single-circuit 500-kV line	Transport existing and new energy resources to load demand centers to the west. Additionally, this line will transport existing and new Pacific Northwest energy resources to serve load demand centers to the east. Provide physical separation to meet reliability criteria between a northern route (Populus – Borah – Midpoint – Hemingway) and a southern route (Populus – Cedar Hill – Hemingway). Physical separation is needed due to existing transmission line congestion (multiple lines in the same area) and wildland fires resulting in outages.
Segment 8—Midpoint to Hemingway, single-circuit 500-kV line	Transport existing and new energy resources to load demand centers throughout the system. Provide physical separation to meet reliability criteria between a northern route (Populus – Borah – Midpoint – Hemingway) and a southern route (Populus – Cedar Hill – Hemingway). Physical separation is needed due to existing transmission line congestion (multiple lines in the same area) and wildland fires resulting in outages.
Segment 9—Cedar Hill to Hemingway, single-circuit 500-kV line	Transport energy resources to serve load demand centers throughout the system. Provide physical separation to meet reliability criteria between a northern route (Populus – Borah – Midpoint – Hemingway) and a southern route (Populus – Cedar Hill – Hemingway). Physical separation is needed due to existing transmission line congestion (multiple lines in the same area) and wildland fires resulting in outages.
Segment 10—Midpoint to Cedar Hill, single-circuit 500-kV line	Provide a midway tie between the northern and southern routes, which is required for system reliability to move flows of the north system or the south system when transporting greater than 2,500 MW of power.

[1/] Creston Substation has been deleted from the Project. The location of the Creston substation is now used as the dividing point between Segments 2 and 3. See Section 3 for details.

3.0 PROJECT DESCRIPTION

3.1 Overall Project

As proposed in this revised POD, the Gateway West Project is composed of ten segments of high-voltage transmission lines that will run between proposed or existing substations. These segments start at the existing Windstar Substation close to the Dave Johnston Power Plant near Glenrock, Wyoming, and continue west until reaching the existing Hemingway Substation approximately 30 miles southwest of Boise, Idaho. An overview map of the Project location and facilities is provided in Appendix A, Figure A-1. Figure A-1 shows the Proposed Route (red). Maps of each segment are shown on Figures A-2 through A-12 in Appendix A. Maps of each existing or proposed substation are provided in Appendix A as Figures A-13 through A-24.

Changes since Draft Environmental Impact Statement (EIS) and January 2010 POD

The major facility design changes from the Project described in the Draft Environmental Impact Statement (EIS) and January 2010 POD are:

Elimination of Segment 1E – Elimination of the proposed single-circuit 230-kV line that would have been constructed between Windstar and Aeolus along Segment 1E. Segment 1E is no longer part of the Project because of lack of timely development of previously announced and planned wind resources within the project timeframe. As now proposed, Segment 1 will be a new 230-kV line between the Windstar and Aeolus substations (Segment 1W(a)) and a reconstruction of an existing 230-kV line between Dave Johnston Power Plant and Aeolus Substation (Segment 1W(c)). Elimination of Segment 1E results in the elimination of some equipment in the Windstar and Aeolus substations.

Elimination of one of the Segment 2, 3, and 4 electrical circuits – Adoption of one single-circuit 500-kV transmission line for Segments 2, 3, and 4. This alternative is described in the Draft EIS as the first phase of the Schedule Variation and therefore is fully evaluated in that document. The difference between the Schedule Variation and the Project as described herein is that the second phase will not be built. Elimination of the second circuit between Aeolus and Populous Substations eliminates the need for the Creston and Bridger 230-kV Substations and some equipment in the Aeolus and Anticline Substations. .

Elimination of Creston Substation – The demand for oil and gas field electrical energy has not materialized. The Creston Substation is no longer needed and therefore was eliminated. However, the location continues to be used as the terminus for Segments 2 and 3, whose routing was determined by the WWEC and by the Wyoming Governor's EO-2011-5.

Proposed Route changes – Since the January 2010 POD, engineering has progressed on portions of the Proposed Route. A design centerline has been developed for portions of the Proposed Route Segments 1W(a), 1W(c), 2, 3, 4, and portions of 7. These micro-siting changes range from less than 100 feet up to several miles. The changes are due to more site-specific information, refined design criteria for structure placement and conductor spans, and compliance with clearance and set-back codes for mine operations, railroads, and highways. Other changes are due to continued consultation with landowners. Finally, the Companies have adopted Alternative 2C and Alternative 4A as their Proposed Routes based on public comment during the Draft EIS review process.

Variation changes – The Schedule Variation, Structure Variation, and Design Variation alternatives are no longer part of the Project.

To maintain the segment numbering system and naming convention with the elimination of the Creston Substation, the location of the termination of Segment 2 and the beginning of Segment 3 is now simply called "Creston."

The following Project description incorporates the changes described above.

3.1.1 Proposed Project

The Project starts in Wyoming at the Windstar Substation and Dave Johnston Power Plant. Segment 1W(a) for the most part follows or parallels the West-wide Energy (WWE) corridor and an existing 230-kV line. This 230-kV line is the proposed route for reconstruction as Segment 1W(c). Both lines will terminate at the proposed Aeolus Substation. The Project then proceeds as one single-circuit 500-kV line from Aeolus to Populus Substation though Segments 2, 3, and 4. The interconnection from Anticline to its neighboring existing substation at the Jim Bridger Power Plant, Segment 3A, is 5.5 miles of 345-kV single-circuit line. At Populus, the Gateway West Project splits into two single-circuit 500-kV roughly parallel paths. Segments 5, 6, and 8 follow a more northerly route toward the Hemingway Substation through the Borah and Midpoint Substations, while Segments 7 and 9 travel a more southerly route through the Cedar Hill Substation to Hemingway. Segment 10 provides an interconnection between the Cedar Hill and Midpoint Substations and also provides an interconnection between the more northerly and more southerly routes. The Companies have proposed this split because of the need to serve loads along the way and also to increase reliability.

The transmission line segments will cross federal, state, and private lands. Table 3.1-1 summarizes miles crossed by ownership for the Proposed Route. The total length of all segments requiring new transmission line construction is approximately 1,000 miles. The ROW width requested for the transmission line is 125 feet for single-circuit 230-kV segments, 150 feet for the 345-kV segment, and 250 feet for single-circuit 500-kV segments.

Facilities included as part of the Project include:

- Ten transmission line segments, including their associated access roads, multi-use and helicopter fly yards, and other temporary construction ground disturbances;
- Three proposed substations and expansion or modifications at nine existing substations;
- Other associated facilities including communication systems and optical fiber regeneration stations, and
- Access roads and distribution supply lines where needed for proposed substations and optical fiber regeneration stations.

Details of construction and operations are summarized in Section 3.5 and detailed in Appendix B. Environmental protection plans are briefly summarized in Section 4.0 and included as appendices. These plans are considered part of the Project description for the proposed Project. Table 3.1-2 illustrates and summarizes the Proposed Action. Table 3.1-3 shows the construction schedule for the Project.

Table 3.1-1. Proposed Project Summary of Miles and Percent Crossed by Ownership

Segment	Length (Miles)						Percent of Total				
	BLM	**NF[1/]**	**State**	**Private**	**Other [2]**	**Total**	**BLM**	**NF**	**State**	**Private**	**Other**
Segment 1W(a) – Windstar to Aeolus	27.0	2.3	17.5	27.0	0.1	**73.8**	36.6	3.1	23.6	36.5	0.1
Segment 1W(c) – Dave Johnston to Aeolus	24.7	2.3	16.1	30.4	.1	**73.6**	33.6	3.2	21.8	41.3	0.1
Segment 2 – Aeolus to Creston	37.6	–	4.7	49.5	0.1	**91.9**	41.0	–	5.1	53.9	0.1
Segment 3 – Creston to Anticline	22.5	–	1.0	22.5	–	**45.9**	48.9	–	2.2	48.9	–
Segment 3A—Anticline to Jim Bridger 345-kV	3.2			1.9		**5.1**	63.0			37.0	
Segment 4 – Anticline to Populus	72.0	9.1	12.5	100.7	3.3	**197.6**	36.4	4.6	6.3	500.9	1.7
Segment 5 – Populus to Borah	13.2	–	3.6	38.9	0.1	**55.7**	23.7	–	6.5	69.8	.1
Segment 6 – Borah to Midpoint[3/]	–	–		0.5	–	**0.5**		–		100.0	–
Segment 7 – Populus to Cedar Hill	28.3	–	4.3	85.6	–	**118.2**	24.0	–	3.6	72.4	–
Segment 8 – Midpoint to Hemingway	87.1	–	9.3	31.5	3.6	**131.5**	66.2	–	7.1	24.0	2.7
Segment 9 – Cedar Hill to Hemingway	129.2	–	4.6	28.4	–	**162.2**	79.7	–	2.8	17.5	–
Segment 10 – Midpoint to Cedar Hill	16.2	–	–	18.0	0.1	**34.4**	47.2	–	–	52.5	0.3
Total Project[4/]	**461.1**	**13.7**	**73.4**	**434.9**	**7.3**	**990.5**	**46.6**	**1.4**	**7.3**	**43.9**	**0.7**

1/ Totals reflect mileage crossed on National Forest System (NFS) land.
2/ Other includes Bureau of Reclamation, U.S. Fish and Wildlife Service, etc.
3/ Segment 6 does not include ground-disturbing activity except in association with the expanded Borah and Midpoint Substations.
4/ Totals may not equal 100 percent due to rounding.

Table 3.1-2. Summary of Project Facilities

Project Facility	Description
Transmission Line Segments	
Transmission Line Features Common to All Proposed 500-kV Segments	• Three-phase 500-kV construction for all tower designs, conductor spacing and clearances[1]. • Conductors: Bundled 1949.6 kcmil 42/7 aluminum conductor steel reinforced (ACSR)/TWD "Athabaska/TW", with three subconductors per phase. Non-specular (dull) finish rather than a shiny finish. • Estimated subconductor diameter: 1.504 inches. • Bundle spacing: Distance between subconductors is 18 inches and 25 inches. • Non-reflective, non-refractive insulators. • One optical ground wire (OPGW) containing 48 fibers and with diameter of 0.637 inch on one side of tower. • One extra high strength (EHS) steel overhead ground wire. • Steel overhead ground wire diameter: approximately 0.495 inch. • Minimum ground clearance: 35 feet. • Structure types: lattice steel single-circuit structures. Dulled galvanized steel finish. • Structure heights: Single-circuit structure varies between 145 and 180 feet. Average height of 156 feet. • Approximate distance between structures: 1,200 to 1,300 feet. • .ROW width for one single-circuit: 250 feet. • The exact quantity, distance between, and placement of the structures will depend on the final detailed design of the transmission line, which is influenced by the terrain, land use, environmental constraints, and economics. Alignment options may also slightly increase or decrease the quantity, location, and height of structures.

Table 3.1-2. Summary of Project Facilities (continued)

Project Facility	Description
Transmission Line Features for Segment 3A (345-kV)	• Three-phase 345-kV construction for all structure designs, conductor spacing and clearances[1]. • Conductors: Bundled 1272 kcmil 45/7 ACSR "Bittern" with three subconductors per phase. Non-specular finish. • Estimated subconductor diameter: 1.345 inches. • Bundle spacing: 18 inches and 25 inches. • Non-reflective, non-refractive insulators. • One optical ground wire (OPGW) containing 48 wires and with diameter of 0.637 inch where communications is required • One EHS steel overhead ground wire. • Estimated shield wire diameter: approx. 0.495 inch. • Minimum ground clearance: 30 feet. • Structure types: single-circuit steel H-frame structures, self-weathering steel. • Above-ground structure heights: varies between 80 and 110 feet. • Approximate distance between structures: 800 feet. • ROW width: 150 feet. • The exact quantity, distance between and placement of the structures will depend on the final detailed design of the transmission line, which is influenced by the terrain, land use, environmental constraints, and economics. Alignment options may also slightly increase or decrease the quantity, location, and height of structures.
Transmission Line Features Common to All Proposed 230-kV Segments	• Three-phase 230-kV construction for all structure designs, conductor spacing and clearances[1]. • Non-specular finish applied to conductors. • Bundle spacing: 18 inches vertical with two subconductors per phase. • Non-reflective, non-refractive insulators. • One optical ground wire (OPGW) containing 48 fibers and with diameter of 0.637 inch where communications is required • Two EHS steel overhead ground wires where communication is not required. One EHS steel overhead ground wire where communication is required. • Estimated shield wire diameter: approx. 0.495 inch. • Minimum ground clearance: 28 feet. • Structure types: single-circuit steel H-frame structures, self-weathering steel. • Above-ground structure heights: varies between 60 and 90 feet. • Approximate distance between structures: 800 feet. • ROW width: 125 feet. • The exact quantity, distance between and placement of the structures will depend on the final detailed design of the transmission line, which is influenced by the terrain, land use, environmental constraints, and economics. Alignment options may also slightly increase or decrease the quantity, location, and height of structures.

Table 3.1-2. Summary of Project Facilities (continued)

Project Facility	Description
Segment 1W(a) – Windstar to Aeolus 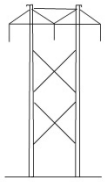	• Single-circuit 230-kV transmission line in one ROW. • Conductors: Bundled 1272 kcmil 45/7 ACSR "Bittern" with two subconductors per phase. • Approximate number of structures: 531. • Line length: Approximately 73.8 miles. • One optical signal regeneration site. • See Figure A-2.
Segment 1W(c) – Dave Johnston to Aeolus 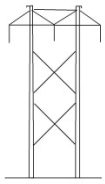	• Existing single-circuit 230-kV transmission line to be reconstructed. • Conductors: Bundled 1272 kcmil 45/7 ACSR "Bittern" with two subconductors per phase between Dave Johnston Substation and Shirley Basin Substation; approximately 58.8 miles. • Conductors: Bundled 1557 kcmil 45/7 ACSS/TW "Potomac" with two subconductors per phase between Shirley Basin Substation and the proposed Aeolus Substation; approximately 13.8 miles. • Approximate number of structures to be replaced: 547. • Line length: Approximately 73.6 miles. • No optical signal regeneration sites. • See Figure A-2.
Segment 2 – Aeolus to Creston 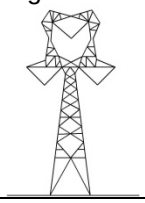	• One single-circuit 500-kV transmission line in one ROW. • Approximate number of structures: 390. • Line length: Approximately 91.9 miles. • Two optical signal regeneration sites. • See Figure A-3.
Segment 3 – Creston to Anticline 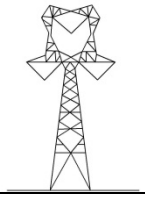	• Single-circuit 500-kV transmission line in one ROW. • Approximate number of structures: 194. • Line length: Approximately 45.9 miles. • No optical signal regeneration sites. • See Figure A-4.
Segment 3A – Anticline to Bridger 345-kV Yard 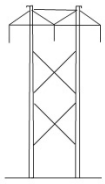	• Single-circuit 345-kV transmission line in one ROW. • Approximate number of structures: 25. • Line length: Approximately 5.1 miles. • No optical signal regeneration sites. • See Figure A-4.
Segment 4 – Anticline to Populus 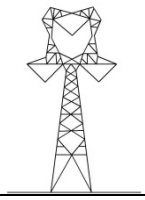	• Single-circuit 500-kV transmission line in one ROW. • Approximate number of structures: 856. • Line length: Approximately 197.6 miles. • Three optical signal regeneration sites. • See Figures A-5 and A-6.

Table 3.1-2. Summary of Project Facilities (continued)

Project Facility	Description
Segment 5 – Populus to Borah 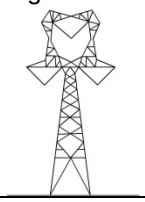	• Single-circuit 500-kV transmission line in one ROW. • Approximate number of structures: 246. • Line length: Approximately 55.7 miles. • No optical signal regeneration sites. • See Figure A-7.
Segment 6 – Borah to Midpoint 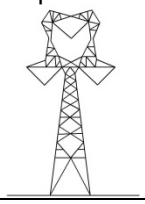	• Re-energize existing 345-kV system to 500-kV (this line segment was previously constructed to 500-kV standards). • Transmission line construction only required at segment ends to reroute from the existing 345-kV substation bays to the proposed 500-kV substation bays. • Structure type illustration is only for the new structures required. • Approximate number of structures: 10. • See Figure A-8.
Segment 7 – Populus to Cedar Hill 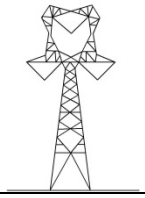	• Single-circuit 500-kV transmission line in one ROW. • Approximate number of structures: 523. • Line length: Approximately 118.2 miles. • Two optical signal regeneration sites. • See Figure A-9.
Segment 8 – Midpoint to Hemingway 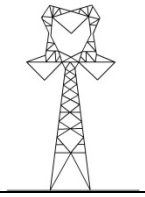	• Single-circuit 500-kV transmission line in one ROW. • Approximate number of structures: 575. • Line length: Approximately 131.5 miles. • Two optical signal regeneration sites. • See Figure A-10.
Segment 9 – Cedar Hill to Hemingway 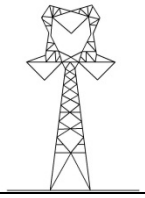	• Single-circuit 500-kV transmission line in one ROW. • Approximate number of structures: 708. • Line length: Approximately 162.2 miles. • Two optical signal regeneration sites. • See Figure A-11.
Segment 10 – Midpoint to Cedar Hill 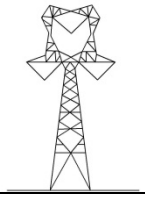	• Single-circuit 500-kV transmission line in one ROW. • Approximate number of structures: 157. • Line length: Approximately 34.4 miles. • No optical signal regeneration sites. • See Figure A-12.

Table 3.1-2. Summary of Project Facilities (continued)

Project Facility	Description
Substation Facilities	
Windstar Substation	• Modification of substation within existing fenceline. • Existing access road is gravel and will not need extension for Gateway West. • 230-kV circuit breakers and related switching equipment, bus and support structures, potential and current transformers.. • 230-kV line termination structures approximately 70 feet in height. • Control, protection, and communications equipment added to the existing control building. • See Figure A-16.
Dave Johnston Power Plant	• Modification of substation within existing fenceline. • Existing access road is adequate. • All construction will be inside the existing fence line. No additional area is required. • 230-kV circuit breakers and related switching equipment, bus and support structures, potential and current transformers. • 230-kV line termination structures approximately 70 feet in height. • Control, protection, and communications equipment added to the existing control building. • See Figure A-17.
Heward Substation	• Expansion of existing Difficulty substation. • Developed acreage: approximately 5 acres fenced and owned separately from the existing Difficulty substation. • 230 kV circuit breakers and related switching equipment, bus and support structures, potential and current transformers. 230 kV line termination structures approximately 70 feet in height. • Control, protection, and communications equipment. • Addition of new control building within the substation fenced area. • See Figure A-18.
Shirley Basin Substation	• Modification of substation within existing fenceline. • Existing access road is adequate. • All construction will be inside the existing fence line. No additional area is required. • 230-kV line termination structures approximately 70 feet in height. • Control, protection, and communications equipment added to the existing control building. • See Figure A-19.

Table 3.1-2. Summary of Project Facilities (continued)

Project Facility	Description
Substation Facilities	
Aeolus Substation	• Proposed substation. • Developed acreage: Approximately 100 acres fenced with an improved access road. • Upgrading County Route 121 is needed and will result in approximately 64 acres of construction disturbance and 33 acres of new permanent roadway, including replacement of an existing bridge. • 500-kV and 230-kV circuit breakers and related switching equipment, bus and support structures, 500/230-kV transformer banks, 500-kV shunt reactor banks, 500-kV series capacitor bank, 500-kV and 230-kV shunt capacitor banks, potential and current transformers. • Control, protection, and communications equipment. • 500-kV line termination structures approximately 135 feet in height. • 230-kV line termination structures approximately 70 feet in height. • Addition of new control buildings within the substation fenced area. • New Static Var Compensator occupying 10-15 acres within the substation fenced area, housed in a building that contains power electronic equipment and associated cooling equipment. • See Figure A-13.
Anticline Substation	• Proposed substation. • Developed acreage: Approximately 140 acres fenced with an improved access road. • To access the new 500-kV yard, an existing dirt road about a mile long will be improved with construction of an all-weather surface with improved access approaches, main highway entrance, and Union Pacific Railroad (UPRR) crossing arrangements. • 500-kV and 345-kV circuit breakers and related switching equipment, bus and support structures, 500/345-kV transformer bank, 345-kV phase shifting transformer, 500-kV shunt reactor banks, 500-kV series capacitor bank, and 500-kV shunt capacitor banks, potential and current transformers. • 500-kV line termination structures approximately 135 feet in height. • 345-kV line termination structures approximately 100 feet in height. • Control, protection, and communications equipment. • Addition of new control buildings within the substation fenced area. • See Figure A-14.
Jim Bridger 345-kV Substation	• Expansion of existing substation. • Existing access road is adequate. • Expansion of 345-kV yard by 10 acres. • Additions to Jim Bridger 345-kV yard, including 345-kV circuit breakers and related switching equipment, bus and support structures, potential and current transformers. • Development of a new 345-kV transmission line termination structure approximately 100 feet in height to connect with the proposed line to Anticline Substation. • Relocation of an existing 345-kV shunt capacitor bank within the substation fenced area. • Control, protection, and communications equipment added inside the existing control building. • See Figure A-20.

Table 3.1-2. Summary of Project Facilities (continued)

Project Facility	Description
Substation Facilities	
Midpoint Substation	• Expansion of existing substation. • Developed acreage: increase the fenced area by approximately 40 acres. • Existing access roads are paved and will not need extension. • 500-kV circuit breakers and related switching equipment, bus and support structures, 500-kV shunt reactor banks, 500-kV series capacitor bank, 500-kV shunt capacitor banks, potential and current transformers. • 500-kV line termination structures approximately 135 feet in height. • Control, protection, and communications equipment added to existing control building. • See Figure A-23.
Cedar Hill Substation	• Proposed substation. • Developed acreage: approximately 54 acres fenced with access road. Adjacent existing road is gravel and will not need extension. • 500-kV circuit breakers and related switching equipment, bus and support structures, 500-kV shunt reactor banks, 500-kV shunt capacitor banks, potential and current transformers. • 500-kV line termination structures approximately 135 feet in height. • Control, protection, and communications equipment. • Addition of new control building within the substation fenced area. • Up to 5 single circuit 500-kV structure relocations required on existing line from Borah Substation. • See Figure A-15.
Hemingway Substation	• Expansion of existing substation. • Expansion of existing station to add a 500-kV line bay for termination of the Hemingway – Midpoint and the Hemingway – Cedar Hill transmission lines. • All construction will be inside the existing fence line. No additional area is required. • Existing access is adequate. • 500-kV circuit breakers and related switching equipment, bus and support structures, 500-kV shunt reactor banks, 500-kV series capacitor bank, 500-kV shunt capacitor banks, potential and current transformers. • 500-kV line termination structures approximately 135 feet in height. • Control, protection, and communications equipment added to the existing control building. • See Figure A-24.
Populus Substation	• Expansion of existing substation. • Developed acreage: increase the fenced area by approximately 80 acres. • Existing access road is adequate. 500-kV and 345-kV circuit breakers and related switching equipment, bus and support structures, 500/345-kV transformer bank, 500-kV shunt reactor banks, 500-kV series capacitor bank, 500-kV shunt capacitor banks, potential and current transformers. 500-kV line termination structures approximately 135 feet in height. • Control, protection, and communications equipment. • Addition of new control building within the substation fenced area. See Figure A-21.

Table 3.1-2. Summary of Project Facilities (continued)

Project Facility	Description
Substation Facilities	
Borah Substation	• Expansion of existing substation. • Developed acreage: increase the fenced area by approximately 35 acres. • Existing access road is gravel and will not need extension. • 500-kV and 345-kV circuit breakers and related switching equipment, bus and support structures, 500/345-kV transformer bank, 500-kV shunt reactor banks, 500-kV shunt capacitor banks, potential and current transformers. 500-kV line termination structures approximately 135 feet in height. • Control, protection, and communications equipment added inside the existing control building. • Up to 5 single circuit 500-kV structure relocations required on existing line from Midpoint Substation. • See Figure A-22.
Communications and Control Facilities – Optical Signal Regeneration Sites	• Regeneration sites are required to amplify the system control and monitoring signals carried over the fiber optic cable attached to the transmission towers. • Up to 13 regeneration sites will be needed for the Project. Segments requiring regeneration sites are noted in the transmission line section of this summary table. The locations for the regeneration sites are determined after detailed design engineering is completed. • Regeneration sites will be located either within a substation or at another location along the route. • Regeneration sites are located within a 75- X 75-foot fenced area. • Typical building dimensions within the fenced area are 12 feet wide X 32 feet long X 9 feet tall. • The fiber within the OPGW cable supported on the transmission structures is routed in and out of the regeneration site building from the nearest transmission structure either underground or overhead along two independent diverse paths. • Electronic equipment, required to support the fiber optic cable installation, is located inside the building. • At sites not within a substation, a liquid propane fueled emergency generator will be installed to provide backup power during an outage of the local electric distribution system supply. • Maximum regeneration site spacing is 55 miles or less depending on access and proximity to local electric distribution lines. • The primary siting criteria for a regeneration site are: adjacent to the Gateway West transmission line ROW, proximity to existing low-voltage electric distribution lines to provide power to the facility, and the ability to easily access the site by vehicle.

Table 3.1-2. Summary of Project Facilities (continued)

Project Facility	Description
Ancillary Facilities	
Distribution Supply Lines	• Distribution line extensions are required to provide operational power and station service power at: o Up to 13 regeneration sites (locations to be determined during final design) o Aeolus 500-kV Substation (11 miles across BLM and private lands), needed for construction and possibly for operation. o Anticline 500-kV Substation (3.3 miles across private land) o Cedar Hill Substation (less than 200 feet across private land). o Heward Substation (new distribution line but same configuration as existing Difficulty substation distribution line) • Typically provided from an existing distribution line located in proximity to the site. • Not required for modifications at Dave Johnston and Shirley Basin or for expansions at Windstar, Jim Bridger, Populus, Borah, Midpoint, and Hemingway Substations since these substations exist.

1/ Project design follows the Avian Power Line Interaction Committee recommendations. Details for tower construction and components such as conductor spacing are provided in Appendix B.

Table 3.1-3. Proposed Action Construction Schedule

Segment Number	Segment or Substation Name	Primarily Wyoming		Idaho	
		Start June 2015	**End Dec 2018**	**Start June 2017**	**End Dec 2021**
	Windstar Substation	Windstar Expansion			
	Dave Johnston 230-kV Substation	Dave Johnston 230-kV Substation			
	Heward Substation	Heward Substation			
	Aeolus Substation	Aeolus Substation			
	Populus Substation	Populus Expansion			
	Anticline and Jim Bridger 345-kV Substations	Anticline Substation and 345-kV bays at existing Jim Bridger Substation			
1W(a)	Windstar – Aeolus #1	Single-Circuit 230-kV and rebuild a short section of the existing single-circuit 230-kV line			
1W(c)	Dave Johnston – Heward –Aeolus	Rebuild the existing single circuit 230-kV			
2	Aeolus – Creston	Single-Circuit 500-kV			
3	Creston – Anticline	Single-Circuit 500-kV			
3A	Anticline – Jim Bridger	Single-Circuit 345-kV			
4	Anticline – Populus	Single-Circuit 500-kV			
	Populus Substation			Populus Expansion	
	Cedar Hill Substation			Cedar Hill Substation	
	Hemingway Substation			Hemingway Expansion	
7	Populus – Cedar Hill			Single-Circuit 500-kV	
9	Cedar Hill – Hemingway			Single-Circuit 500-kV	
10	Midpoint – Cedar Hill			Single-Circuit 500-kV	
	Borah Substation				
	Midpoint Substation			Borah Expansion	
	Hemingway Substation			Midpoint Expansion	
5	Populus – Borah			Hemingway Expansion	
6	Borah – Midpoint [1]			Single-Circuit 500-kV	
8	Midpoint – Hemingway			Existing single-circuit	

1/ Existing single circuit constructed to 500-kV standards (energized from 345-kV to 500-kV)

3.1.2 Structure Lighting

RTO Infrared (IR) obstruction lights that incorporate both red and IR light-emitting diodes (LEDs) in a single unit would be installed on every other transmission tower on the east side of the Jarbidge Military Operating Area between milepost (MP) 46.5 and MP 54.4 of RMP's Proposed Route; in the Saylor Creek Air Force Range restricted area on every structure between MP 91.2 and MP 95.7 of RMP's Proposed Route; and in the IDANG Orchard Combat Training Center to ensure visibility for aircraft pilots, both during normal flight and when aided by night vision systems. Night Vision Goggles (NVGs) and Aviator's Night Vision Imaging System (ANVIS) often employ Class A, B, and C filters. These filters can reduce LED sources that emit light in the visible spectrum. The Vigilant IR Series overcomes this obstacle by combining visible red LEDs and IR LEDs in a single unit. This obstruction light system utilizes a unique optical, electrical, and mechanical design. The RTO is a universal, compact, and efficient obstruction light that has been ETL Certified to FAA requirements. In order to ensure that the intensity of lighting is not so bright as to render the NVGs ineffective, RMP proposes to use equipment with peak lighting intensities of 860 nanometers for the IR lights and 30-50 candelas for red lighting.

3.1.3 Proposed Route

The route changes since the January 2010 POD include elimination of Segment 1E and incorporation of Alternatives 2C and 4A into the Proposed Route.

Because the Project connects a series of three proposed and nine existing substations, it is described by segment and numbered sequentially between substations. The exception is between Segments 2 and 3 where the formerly proposed Creston Substation was eliminated. Table 3.1-4 lists the Proposed Route segments. The reference points are illustrated in Appendix A, Figures A-2 through A-12 by segment.

Table 3.1-4. Summary of Proposed Route

Figure	Designation	Reference Points
Segment 1W – Windstar to Aeolus		
A-2	Segment 1W(a)	1,2
	Segment 1W(c)	1d, 1e, 1g, 2
Segment 2 – Aeolus to Creston		
A-3	Segment 2	2, 3
Segment 3 – Creston to Anticline		
A-4	Segment 3	3, 4
Segment 3A – Anticline to Bridger		
A-4	Segment 3A	3c, 4
Segment 4 – Anticline to Populus		
A-5, A-6	Segment 4	4, 5
Segment 5 – Populus to Borah		
A-7	Segment 5	5, 6
Segment 6 – Borah to Midpoint		
A-8	Segment 6	6, 8
Segment 7 – Populus to Cedar Hill		
A-9	Segment 7	5, 9
Segment 8 – Midpoint to Hemingway		
A-10	Segment 8	8, 11
Segment 9 – Cedar Hill to Hemingway		
A-11	Segment 9	9, 11
Segment 10 – Cedar Hill to Midpoint		
A-12	Segment 10	8, 9

3.1.4 Segment 1W – Windstar/Dave Johnston to Aeolus

Segment 1W is composed of Segments 1W(a) and 1W(c). Both consist of single-circuit 230-kV transmission lines. Segment 1W(a) will be a new transmission line and 1W(c) involves reconstruction of a portion of the existing Dave Johnston – Rock Springs 230-kV transmission line. Reconstruction of the existing transmission line is necessary to increase the load-carrying capacity of this existing line. The existing single conductor per phase will be replaced with two larger conductors per phase, requiring the replacement of all of the existing wood structures with stronger steel-pole, H-frame structures, similar in height and appearance to the existing line. Each single-circuit line will be constructed in a separate ROW to meet reliability criteria. The 230-kV lines will be carried on steel H-frame structures between 60 and 90 feet tall (Appendix B, Figure B-1). Appendix A, Figure A-2 is a map of the Segment 1W routes. Segment 1W(a) will carry the fiber optic communication system for Segment 1. Because of its length it needs an optical signal regeneration site approximately midway along its route. Final locations for the regeneration station will be determined after detailed design engineering is completed.

3.1.4.1 Proposed Route 1W(a)

The Proposed Route 1W(a) extends south and west approximately 73.8 miles from the existing Windstar Substation to the proposed Aeolus Substation (points 1, 2). The Proposed Route crosses the Burlington Northern Railroad, North Platte River, U.S. Highway (US) 87/20, and Interstate 25 (I-25). At MP 4.0, the line turns to the southwest on the east side of Deer Creek, parallel to and west of Segment 1W(c). The routes maintain a minimum of separation of 1,500 feet to meet reliability criteria.

3.1.4.2 Proposed Route 1W(c)

Proposed Route 1W(c) is a rebuild of an existing 230-kV line from the existing Dave Johnston Power Plant to the proposed Aeolus Substation. The route leaves the existing substation at the Dave Johnston Power Plant and proceeds west and south to the proposed Aeolus Substation, a distance of approximately 73.6 miles (points 1d, 1e, 1g, 2). The Proposed Route crosses the North Platte River, Burlington Northern Railroad, US 87/20, and I-25. At MP 2.0, the route turns southwest on the east side of Deer Creek, crossing Deer Creek at MP 14.7 to join Segment 1W(a).

From Banner Mountain, Proposed Routes 1W(a) and 1W(c) follow similar paths, proceeding south and crossing into Natrona County at approximately MP 21.0. After crossing the county line, the two Proposed Routes cross the West Fork of Duck Creek Deer Creek Range and the western edge of the Medicine Bow National Forest, and then proceed generally south passing east of Ice Cave Mountain and Bates Creek Reservoir before crossing into Carbon County. At MP 44.3 Proposed Route 1W(c) enters and then exits the proposed Heward Substation (expansion of the existing Difficulty Substation). Both Proposed Routes then parallel SR 487 for about 14 miles across Shirley Basin. At MP 55.4, Proposed Route 1W(c) ties into existing transmission lines looping into and out of the existing Shirley Basin Substation before proceeding south, still parallel to Proposed Route 1W(a). At MP 58.0, both Proposed Routes turn southwest through Little Basin to the northwest of the Freezeout Mountains. At MP 64.0, the Proposed Routes diverge to a maximum separation of approximately 7,500 feet as Proposed Route 1W(a) swings west to avoid a private landing strip in Red Draw before turning south and crossing Difficulty Creek at MP 70.0. Both Proposed Routes cross the southern toe of the Freezeout Mountains at MP 70.5 and 69.0 before terminating at the proposed Aeolus Substation at MP 73.8 (MP 70.3 for the Dave Johnston – Rock Springs line) on the north side of the Medicine Bow River. Preferred Route 1W(c) will be realigned for a short distance resulting

in the removal of approximately 1 mile of existing 230-kV transmission line where transitions occur between the new and existing transmission line segments that comprise Proposed Route 1W(a). Proposed Route 1W(c) enters and then exits the proposed Aeolus Substation, heading south to MP 71.0 before turning west to rejoin the existing Dave Johnston-Rock Springs line at MP 71.7. Approximately 1.2 miles of the existing 230-kV in the vicinity of the Aeolus Substation will be demolished in order to arrange the new line entry and exit points to the substation.

3.1.5 Segment 2 – Aeolus to Creston

Segment 2 consists of one single-circuit 500-kV transmission line between the proposed Aeolus Substation and the location of the originally planned Creston substation (hereafter abbreviated as Creston) near Wamsutter, Wyoming. This segment generally follows a combination of the WWE corridor and existing transmission lines. Appendix A, Figure A-3 is a map of Segment 2 between the Aeolus Substation and Creston.

Segment 2 as proposed will use 500-kV single-circuit lattice towers between 145 and 180 feet tall (Appendix B, Figure B-3). Segment 2 is about 92.0 miles long and therefore will need two optical signal regeneration sites, one site in the in the area south of Rawlins and another in the general location of the formerly-planned Creston substation. Final locations for regeneration stations will be determined after detailed design engineering is completed.

The proposed 92.0 mile-long 500-kV single-circuit line (points 2, 3) exits the proposed Aeolus Substation directly west crossing County Route (CR) 121 and the Medicine Bow River paralleling the north side of the Seven Mile Hill Wind Energy Project. About 7.2 miles west of the substation, the route turns south, generally following Hanna Draw, for about 27.0 miles through the Hanna Sage Grouse Core Area and an active coal mining area north and west of Hanna. The Proposed Route between MP 3.0 and 30.0 was recommended as the preferred route by the Wyoming Governor's Office and follows the corridor established by EO-2011-5. At MP 28.0, the Proposed Route passes between Dana Ridge and Saint Mary's Ridge before turning west near Walcott Junction. The Proposed Route parallels north of I-80 for about 4.5 miles, crosses I-80 and the North Platte River south of the Fort Steele State Historic Site before continuing west between two bald eagle nest buffers on the west bank of the North Platte River at MP 38.0. From there, the route proceeds west, passing between two Wyoming Game and Fish Department (WGFD) parcels and a BLM Special Recreation Management Area (SRMA), and north Hogback ridge and multiple raptor nests. The Proposed Route then passes through alternating sections of private and BLM-managed land, following an existing pipeline northwest for 4 miles before again continuing west at MP 42.2.

Proceeding west, the Proposed Route passes north of Severson Flats and south of the Greenville Dome, the Wyoming State Penitentiary, and the Rawlins water treatment facility before crossing SR 71 about 2.7 miles south of Rawlins. West of SR 71, the route traverses Coal Creek and Coal Mine Ridge south of and parallel to an existing 230-kV line. The route continues at varying distances from the existing line to Creston. In this last 40-mile segment, the route crosses Hogback Ridge, Red Rim, SR 789, and several active oil and gas fields before reaching Creston about 4.0 miles south of Wamsutter.

The Proposed Route follows the WWE corridor, which is also a BLM-designated ROW corridor (BLM 2008a), where feasible. It diverts only to stay within the transmission corridor through core sage-grouse population areas established by the Governor's Executive Order (EO-2011-5), and to avoid the Fort Fred Steele State Historic site, the Seven Mile Hill Wind Energy Project, sage-grouse leks, and oil and gas well infrastructure. The Proposed Route is within or parallel to the WWE corridor (which is also an existing utility corridor) for 50.0 miles out of a total route

length of 92.0 miles. Of its 92.0 mile length, the route parallels existing transmission lines for 50.0 miles. The Proposed Route crosses the Hanna Sage-Grouse Core Area (Hanna Core Area) within the Wyoming Governor's EO-2011-5 designated corridor on a Greenfield route from approximately MP 3.0 to 30.0.

3.1.6 Segment 3 – Creston to Anticline

Segment 3 has two components: a short 5.1-mile 345-kV interconnection between the existing Jim Bridger 345-kV substation and the proposed Anticline substation (Segment 3A see Section 3.1.7), and a 45.9-mile-long 500-kV line between the terminus of Segment 2 near the previously proposed Creston substation and the proposed Anticline substation (called simply Segment 3).

The 500-kV portion of Segment 3 is located between points 3 and 4. It begins at Creston and proceeds west for 17 miles, at which point it turns northwest and crosses I-80 at MP 19.3. This 17-mile segment parallels I-80 approximately 2 to 3 miles to the south, north of the Delaney Rim. Once north of I-80, Segment 3 stays north of this highway until it reaches the east side of the Jim Bridger Power Plant access road. In this segment, oil and gas pipelines and wells were important routing considerations. At MP 43.1, the 500-kV circuit turns north and proceeds for about 2.6 miles along Deadman Wash parallel to the power plant road before entering the proposed Anticline Substation.

Appendix A, Figure A-4 is a map for Segment 3. Segment 3 as proposed will use 500-kV single-circuit lattice towers between 145 and 180 feet tall (Appendix B, Figure B-3). Segment 3 (in total) parallels existing transmission lines for 42.1 miles.

No optical signal regeneration site is needed.

3.1.7 Segment 3A – Anticline to Bridger

Because Segment 3A is a different voltage from the rest of Segment 3, it is listed and treated separately for the purposes of a technical project description. A 5.1-mile interconnecting 345-kV transmission line will be constructed between the proposed Anticline Substation and the existing Jim Bridger Substation 345-kV yard to electrically connect the two substations. About 0.5 mile east of the plant access road, this route angles to the northwest on the east side of Deadman Wash before turning west and then south into the existing substation. Appendix A, Figure A-4 is a map for Segment 3A. The structure type will steel-pole H-frame (Figure B-2, Appendix B).

No optical signal regeneration site is needed.

3.1.8 Segment 4 – Anticline to Populus

One single-circuit 500-kV line is proposed between the proposed Anticline Substation and the existing Populus Substation near Downey in southern Bannock County, Idaho. This segment generally follows an existing transmission line corridor. Appendix A, Figures A-5 and A-6 show the Proposed Route for Segment 4 in Wyoming and Idaho, respectively.

Segment 4 as proposed will use 500-kV single-circuit lattice towers between 145 and 180 feet tall (Appendix B, Figure B-3).

Segment 4 is 197.6 miles long and will require three optical signal regeneration sites spaced approximately equidistant along its route. Final locations for regeneration stations will be determined after detailed design engineering is completed.

The proposed single-circuit 500-kV segment extends from the proposed Anticline Substation southeast of the Jim Bridger Power Plant and partially along the existing 345-kV corridor in

Sweetwater County, Wyoming, to the existing Populus Substation west of the community of Downey in Bannock County, Idaho (points 4, 5). The Proposed Route exits the proposed Anticline Substation to the west and parallels to the south side of the existing 345-kV corridor for about 40.0 miles, then, after by-passing the Seedskadee National Wildlife Refuge, continues to follow the existing transmission lines, except for two short deviations in the vicinity of the two U.S. Highway 30/SR 89 crossings, a further 120.0 miles. The Proposed Route crosses the Greater South Pass Core Area in the Wyoming Governor's EO-2011-5 designated corridor between MP 32.0 to MP 45.0. The route then crosses the Seedskadee Core Area in the Wyoming Governor's EO-2011-5 designated corridor between MP 58.0 to MP 70.2. The route further crosses the Sage Core Area in the Wyoming Governor's EO-2011-5 designated corridor between MP 104 to MP 120. All three crossings of sage grouse core area occur adjacent to existing 345-kV transmission lines.

The Proposed Route crosses Deadman Wash and North Baxter Basin before crossing Killpecker Creek, US 191 and the White Mountains about 10 miles north of Rock Springs. The route continues to parallel the existing 345-kV corridor west toward the Seedskadee National Wildlife Refuge where it deviates south at MP 45.8 through Stevens Flat to avoid the southern boundary of the Refuge near Big Island. The Proposed Route crosses the Green River at MP 52.0 then turns north at MP 53.4 paralleling SR 372 for approximately 3.5 miles before turning west again to parallel the existing 345-kV corridor through the oil and natural gas fields in Whiskey Basin, crossing Oyster Ridge and US 189 about 4.5 miles north of Kemmerer. Between MP 67.0 and MP 136.8, the Proposed Route follows the alignment recommended by the Wyoming Governor's Office. At MP 100.0, the Proposed Route crosses to the north side of the existing 345-kV corridor in the Pomeroy Basin before continuing west parallel to the corridor, crossing Commissary Ridge and then the Ham's Fork River south of Kemmerer Reservoir. Still parallel to the 345-kV corridor, the route continues to the northwest across the Ham's Fork Plateau and the Tunp Range, deviating slightly to cross US 30/SR 89, before crossing the Bear River about 0.5 miles south of Cokeville.

At MP 126.0 the route continues northwest crossing Boundary Ridge and proceeding from Lincoln County, Wyoming, into Bear Lake County, Idaho, at MP 130.0. From the county line, the Proposed Route continues to parallel the north side of the existing 345-kV corridor crossing the Bear River at MP 134.3 before deviating slightly across Sheep Creek and the Sheep Creek Hills. The Proposed Route then continues west to cross US 30 about 2.8 miles south of the community of Montpelier.

The Proposed Route remains parallel and offset about 1,500 feet northeast of the existing 345-kV corridor crossing Bear Lake Valley, US 89, and the Bear River before proceeding to the eastern boundary of the Caribou-Targhee National Forest (NF) at MP 161.1. The Proposed Route crosses about 9.2 miles within the NF boundary on a new ROW north of, but offset from, the existing 345-kV line. The route then rejoins the existing corridor on the west side of SR 34 crossing Mound Valley and the Bear River for a fourth time.

At MP 180.0, the Proposed Route leaves the existing 345-kV corridor and proceeds west passing along the north side of Dry Hollow Mountain and angling northwest toward the community of Downey. About 2 miles south of Downey, the Proposed Route crosses US 91 and the Marsh Valley. It then continues northwest to the existing Populus Substation located about 1.3 miles west of Downey.

3.1.9 Segment 5 – Populus to Borah

One single-circuit 500-kV line is proposed between the existing Populus Substation and the existing Borah Substation in Power County, Idaho. This line will be constructed with 500-kV single-circuit lattice steel towers between 145 and 180 feet tall (Appendix B, Figure B-3). Appendix A, Figure A-7 shows the Proposed Route for Segment 5. Segment 5 is 55.7 miles long and therefore will not need optical signal regeneration sites.

The proposed single-circuit 500-kV segment is approximately 55.7 miles long between points 5 and 6. Two existing 345-kV transmission lines extend between the Populus and Borah Substations. The Proposed Route follows the existing lines from the existing Populus Substation northwest for approximately 12 miles, crossing the existing lines just north of Hawkins Reservoir and south of Hawkins Basin, at which point the Proposed Route follows a Greenfield alignment for the remainder of the route, extending northwest along the foothills to the west of Hawkins Basin before turning west, south of the Fort Hall Indian Reservation, crossing the Arbon Valley and the Deep Creek Mountains and then turning north east of Rockland and on to the existing Borah Substation. The first part of Segment 5 crosses I-15 about 2.0 miles northwest of the Populus Substation. At MP 12.4, the Proposed Route turns west crossing the existing 345-kV corridor and then the Bannock County/Power County line at MP 18.2. The route continues west, parallel to the proposed Populus – Cedar Hill line (Segment 7) crossing the Arbon Valley and the Deep Creek Mountains south of the Fort Hall Reservation. At the west side of these mountains, the Proposed Route turns northerly between the Deep Creek Mountains and SR 37.

Proceeding north along the western foothills of the Deep Creek Mountains, the route crosses several drainages, particularly the East Fork of Rock Creek, generally avoiding farm land located west of the route. The route crosses Visual Resource Management (VRM) Class II land at several points, but avoids the Bowen Canyon Bald Eagle Sanctuary in the mountains to the east. At MP 49.9 the route proceeds west, again parallel to the existing 345-kV corridor, crossing I-86, SR 37, and US 30 before crossing the Snake River and entering the existing Borah Substation.

From MP 36.0 north to the existing Borah Substation, the current Proposed Route is about 1 to 2 miles east of the Companies' original Proposed Route. Meetings with local landowners and Power County representatives identified a more acceptable route that was subsequently adopted by the Companies. As a result, the current Proposed Route is located more on public land.

The Segment 5 Proposed Route is mostly adjacent to, but offset approximately 1,500 feet from, the Segment 7 Proposed Route for approximately 30 miles. Of its total length, the Proposed Route will be Greenfield for 39.7 miles and parallel to existing transmission lines for 16.0 miles.

3.1.10 Segment 6 – Borah to Midpoint

In Segment 6, from the existing Borah Substation to the existing Midpoint Substation located approximately 9 miles south of Shoshone, Idaho, the voltage will be increased to 500 kV on the existing Midpoint – Kinport 345-kV transmission line. The line will be routed into the proposed 500-kV yard at the Borah Substation requiring approximately five structure replacements in the immediate vicinity of the Borah and Midpoint Substations but requiring no other transmission line construction. The remaining line from Borah to Kinport terminates in the existing 345-kV yard at the Borah Substation and will remain in operation at 345 kV. The structures utilized for the reroutes on each end of this line segment are 500-kV single-circuit lattice steel towers

between 145 and 180 feet tall (Appendix B, Figure B-3). Appendix A, Figure A-8 shows the locations of the Borah and Midpoint Substations and the existing 345-kV line.

The line segment between the Borah and Midpoint Substations, Segment 6, is part of the existing 345-kV transmission line that was constructed to 500-kV design standards although currently operated at 345 kV. No new transmission line construction will be required along Segment 6 to operate this line segment at 500 kV, except in the vicinity of the Borah and Midpoint Substations. At the Borah and Midpoint Substations, the line will be rerouted and re-terminated from the existing 345-kV line bays into the new 500-kV line bays at each substation. Several new structures and conductors will be needed adjacent the Midpoint Substation to reroute the existing 345-kV line from its termination on the north side of the existing station to the proposed 500-kV yard expansion on the south side. Several new structures and conductors will also be needed at the Borah Substation to reroute the line from the northeast side of the existing station to the proposed 500-kV yard addition on the south side. A new structure will be needed to route the 345-kV line between Borah and Kinport into the existing 345-kV yard on the east side. The line between Borah and Midpoint will then be energized at 500 kV.

3.1.11 Segment 7 – Populus to Cedar Hill

One 118.2 mile single-circuit 500-kV transmission line is proposed between the existing Populus Substation and the proposed Cedar Hill Substation near the Cassia County/Twin Falls County approximately 14 miles southeast of Twin Falls. The line will be constructed utilizing 500-kV single-circuit lattice steel towers between 145 and 180 feet tall (Appendix B, Figure B-3). Appendix A, Figure A-9 shows the Proposed Route for Segment 7. Because Segment 7 is 118.2 miles long, it will need two optical signal regeneration sites along its route. Final locations for regeneration stations will be determined after detailed design engineering is completed.

The proposed single-circuit 500-kV line route (points 5, 9) will extend from the expanded Populus Substation about 9.0 miles along the east side of the existing 345-kV lines before turning west and crossing the existing lines south of Cedar Mountain and Hawkins Reservoir. The route turns northwest along the foothills west of Hawkins Basin before turning west and passing south of Pauline. From there, the Proposed Route continues west across the Arbon Valley and the Deep Creek Mountains before crossing SR 37 less than 1 mile south of Rockland at MP 41.0. This segment continues west another 7 miles across the northern foot of the Sublett Range.

From this point it crosses into Cassia County and then proceeds across the Raft River Valley, where it turns southwest along the northern toe of the Cotterel and Albion Mountains before turning west for approximately 22 miles across an area of extensive irrigated cropland and dairy operations, entering the proposed Cedar Hill Substation at MP 118.2. Of its 118.2 mile length, the Proposed Route will be Greenfield for 107 miles and parallel existing transmission lines for 11.2 miles.

3.1.12 Segment 8 – Midpoint to Hemingway

One single-circuit 500-kV transmission line is proposed between the existing Midpoint Substation and the existing Hemingway Substation, located approximately 30 miles southwest of Boise, Idaho. The line will be constructed using steel lattice towers between 145 and 180 feet tall (Appendix B, Figure B-3). Appendix A, Figure A-10 shows the proposed Segment 8 route. The Proposed Route is about 131.5 miles long and therefore two optical signal regeneration sites, about 40 to 50 miles apart, will be needed along the route. Final locations for regeneration stations will be determined after detailed design engineering is completed.

The 131.5 mile-long Proposed Route (points 8, 11) proceeds west-northwest, parallel to an existing 230-kV line, passing just north of the juncture of the Jerome, Lincoln, and Gooding County lines near MP 9. This route continues in the same direction, passing between Gooding and Wendell before crossing the Malad River at MP 19.3. Southwest of Pioneer Reservoir, the route angles northwest away from the existing 230-kV corridor to avoid impacts to an identified residence, crossing the Gooding County/Elmore County line at MP 36.9. At MP 42.0 the route rejoins the existing 230-kV corridor. Between MP 45.8 to MP 48.1 and MP 50.2 to MP 51.1, the Proposed Route crosses VRM Class I in an area of multiple transmission lines, entering the WWE corridor at MP 52.0. At MP 58, the route parallels south and west of the existing PacifiCorp 500-kV line offset 1,500 feet for reliability reasons. The route crosses US 20 at MP 68.5 approximately 3.8 miles northeast of Mountain Home and turns west at MP 86.2,, crossing I-84 at MP 90.2 and the Elmore County/Ada County line at MP 90.9. Continuing west, the Proposed Route is located approximately 1,500 feet south of the existing Summer Lake to Midpoint 500-kV transmission line through the Morley Nelson Snake River Birds of Prey National Conservation Area (SRBOP).

The route enters the SRBOP at MP 98.8 and continues to the west, then southwest through Ada County. A 4.7-mile segment of the route passes through a portion of the Alpha Maneuver Sector for the Idaho Army National Guard (IDANG), which is located in the SRBOP. At MP 116, the route turns more to the south, crossing the Snake River, the Halverson and Wees Bar non-motorized areas (NMA) and the Guffey Butte-Black Butte Archaeological District between MP 117 and MP 120. The Snake River in this area forms the Ada County/Owyhee County line. The route continues southwest and then west around Guffey Butte before intercepting a WWE corridor and turning northwest at MP 124.2, approximately 3.5 mile north of Murphy. The route leaves the SRBOP at MP 126.7 before ending at the existing Hemingway Substation. Of its 131.5 mile length, approximately 15.4 miles are Greenfield and 116.1 miles parallel existing transmission lines.

3.1.13 Segment 9 – Cedar Hill to Hemingway

One single-circuit 500-kV transmission line is proposed between the proposed Cedar Hill and the existing Hemingway Substations. The line will be constructed using 500-kV single-circuit lattice steel structures between 145 and 180 feet tall (Appendix B, Figure B-3). Appendix A, Figure A-11 provides details on the transmission line route between the Cedar Hill and Hemingway Substations.

Segment 9 is 162.2 miles long and therefore will need two optical signal regeneration sites along its route. Final locations for regeneration stations will be determined after detailed design engineering is completed.

The 162.2 mile long Proposed Route (points 9, 11) for the single-circuit 500-kV line proceeds generally west through public and private rangeland. The route continues west about one mile south of Twin Falls Military Reservation, and crosses US 93 at MP 17.7. At MP 27.9 the route turns northwest to parallel the east side of Salmon Falls Creek adjacent to an existing 138-kV transmission line for about 5.0 miles. At MP 33 the Proposed Route crosses the Salmon Falls Creek at the north end of Lilly Grade adjacent to an existing single-phase 34.5-kV distribution line just north of the Salmon Falls Creek WSA and a VRM I designated viewshed. The area crossed is still part of an Area of Critical Environmental Concern (ACEC) and eligible Wild and Scenic River (WSR). Several raptor nest buffers are crossed as the route continues northwest through the Bruneau Desert. At MP 46.6, the route enters Owyhee County and turns to the north along the Twin Falls County/Owyhee County line for about 10 miles before turning to the northwest at MP 56.5, then into Elmore County at MP 63.4. Between MP 46.6 and MP 63.4 the

Proposed Route will be just inside the east boundary of the general Jarbidge Military Operating Area (MOA). Within the MOA, the height of the transmission structures normally cannot extend more than 100 feet above ground level. Consultation between Twin Falls County and the U.S. Air Force has determined that this height restriction would not apply and this minor encroachment is acceptable (Postema 2010).

AT MP 79.0, the Proposed Route joins the designated WWE corridor northwest of Deadman Flat, entering the SRBOP at MP 88.0. The Proposed Route passes through the Saylor Creek Air Force Range restricted area and to the south of Bruneau Dunes State Park in the between MP 91 to MP 95.6. Consultation between representatives of the BLM, U.S. Air Force, Idaho Department of Parks and Recreation, and the Companies has determined that the location of the Proposed Route within the restricted Military Operating Area and just to the south of Bruneau Dunes State Park is acceptable with micro-siting . From this point, the Proposed Route proceeds generally southwest, crossing the Bruneau River and the Bruneau Valley near MP 99.0.

On the west side of this valley the route turns northwest, crosses SR 51, and then continues northwesterly on the southwest side of the Bruneau River, then the Snake River and SR 78. In this portion, the Proposed Route follows the WWE corridor on BLM-managed land but frequently changes direction on private segments to avoid rural residences, the small communities of Murphy and Oreana and, as much as possible, cultivated lands. The route reenters the SRBOP between MP 142.4 to MP 146.2 and again between MP 151.5 to MP 152.6, mainly within the WWE corridor on BLM-managed land, and continues north and west into the Hemingway Substation at MP 162.2.

3.1.14 Segment 10 – Midpoint to Cedar Hill

One single-circuit 500-kV transmission line is proposed between the existing Midpoint and proposed Cedar Hill Substations. The line will be constructed using 500-kV single-circuit lattice steel structures between 145 and 180 feet tall (Appendix B, Figure B-3). Appendix A, Figure A-12 shows the proposed Segment 10 route between Midpoint and Cedar Hill. The Midpoint Substation is described under Segment 8 and the Cedar Hill Substation is described under Segment 9. Segment 10 will not need an optical signal regeneration site along its route.

The 34.4 mile-long Proposed Route (8, 9) exits the existing Midpoint Substation parallel to an existing 345-kV line and within the designated WWE corridor in a southeasterly direction for 11 miles. At this point, the route turns south crossing the North Side Main Canal, and angles southeast again before turning south again at MP 18.8. From MP 20.5 to the proposed Cedar Hill Substation the Proposed Route again parallels the existing 345-kV line. The route continues south across Goose Lake west of the community of Eden and then crosses I-84 to the west of Skeleton Butte at MP 23.0, the Snake River(Jerome County/Twin Falls County line) at MP 24.3, and US 30 at MP 26.1, before entering the proposed Cedar Hill Substation at MP 34.4. The Proposed Route follows the alignment of the planned Southwest Intertie Project. If that project is constructed, it will serve in place of the Gateway West Segment 10 Proposed Route. Only one transmission line will be constructed under any circumstances.

3.2 Substations

The Project includes three proposed substations and expansions or modifications at nine existing substations.

3.2.1 Proposed Substations

3.2.1.1 Aeolus Substation

The Aeolus Substation site is located in Carbon County approximately 10 miles west of Medicine Bow, Wyoming, on private land as shown in Appendix A, Figure A-13. The substation is the southern terminus of Segment 1 and the eastern terminus of Segment 2. The Aeolus Substation is proposed to electrically terminate the new 230-kV line 1W(a), the reconstructed portion of the Dave Johnston – Rock Springs 230-kV line 1W(c) looped in and out of the Aeolus Substation, and the new transmission lines that will extend west to the Anticline Substation (Segments 2 and 3).

Equipment to be installed includes 500-kV and 230-kV circuit breakers, high-voltage switches, bus supports, transmission line termination structures, and other equipment for each transmission line. The 500-kV transmission line termination structures are approximately 125 to 135 feet tall. Additional equipment including 500/230-kV transformers, 500-kV capacitors and 500-kV shunt reactors (which resemble a transformer in appearance) will be installed. In addition, a Static Var Compensator will be installed for system reliability. This equipment will occupy about 10 to 15 acres within the overall substation fenced area. New control houses will be added to accommodate the necessary system communications and control equipment. Site development will disturb approximately 120 acres and 100 acres will be required for operations. (Appendix A, Figure A-13).

The Aeolus Substation 500-kV transformers weigh approximately 600,000 pounds during shipment. They will be transported to the Project vicinity, offloaded to a heavy haul transporter, and then transported over the highway to the Aeolus site. The heavy haul transporter is approximately 190 feet long, has 35 axles, and weighs 300,000 to 325,000 pounds. Due to the size of the vehicle, a route with minimal grade and large turning radii is necessary. CR 121 will be upgraded to provide the required access.

The Aeolus Substation will require development of a distribution line to provide electrical power during construction and operation. The 11 mile distribution line will be located within or adjacent to the CR 121 ROW between U.S. 30 and the site. Figure 3.2-1 shows the location of CR 121 and access routes to the Aeolus site.

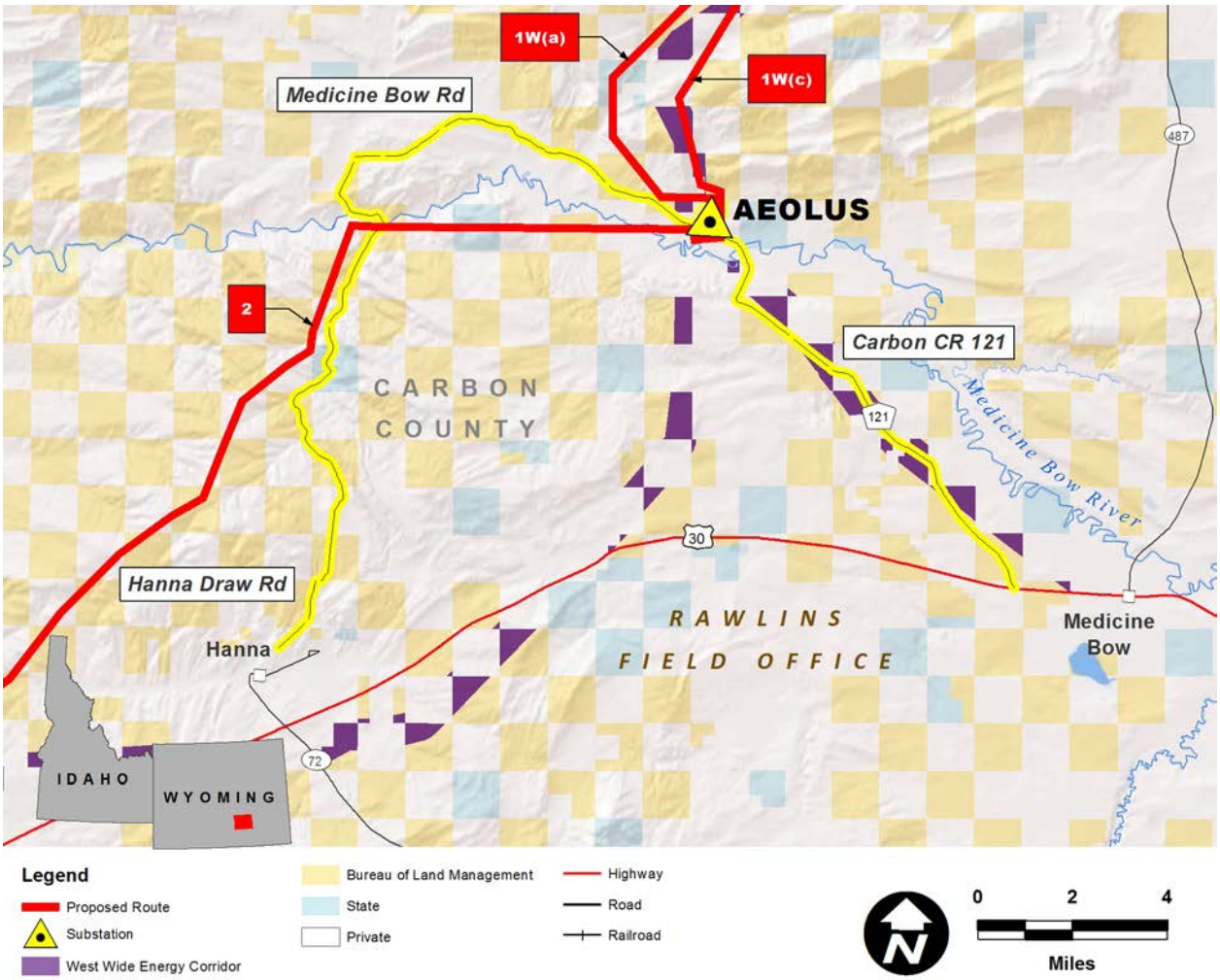

Figure 3.2-1. CR 121 Access to Aeolus Substation

CR 121 Improvements

Existing Conditions: CR 121 is currently a single-lane road, about 20 feet wide and about 11 miles long, from U.S. Hwy 30 to the Aeolus Substation. It is in poor condition with a thin layer of gravel over a clay base and without turnouts. It includes a single-lane bridge over the Medicine Bow River built in 1914 and refurbished with a metal deck around 1972 (see Figure 3.2-2). The bridge was recently inspected by the Wyoming Department of Transportation and found to be in poor structural condition. Its current weight limitations include a 10-ton weight limit for single axle trucks and 13-ton limit for multiple axle trucks, which will not accommodate the heavy haul transporters.

Figure 3.2-2. Looking Westerly Toward the Existing CR 121 Bridge

Needed Improvements: CR 121 will be reconstructed from U.S. Hwy 30 to the immediate vicinity of the Aeolus Substation. Reconstruction will result in approximately 64 acres of construction disturbance and 33 acres of new permanent roadway. Reconstruction includes the following:

- Realignment of the roadway to improve negotiability, visibility, and safety;
- Addition of turnouts, expanding the roadway to 30 feet wide for up to 100 feet along the roadway every mile or where existing terrain and alignment will not accommodate the heavy haul transporter or sight distances are inadequate;
- Improved roadway, likely to include subgrade improvement and application of a geotextile fabric covered by 6 to 8 inches of compacted aggregate base;
- Inspection of all culverts for adequacy and replacement of up to 16;
- Inspection of all cattle guards for adequacy and replacement of up to 6;
- Replacement of the bridge with one that meets Wyoming Department of Transportation standards for HS-20 loading[3]. Based on preliminary engineering, the new bridge requires an approximate span of 125 to 150 feet and a 24-foot travelway width. The new bridge will be installed just downstream (south) of the existing bridge; and
- After the new bridge is completed, removal of the old bridge and its approaches.

Prior to conducting any work, the existing bridge will be evaluated for eligibility for listing on the National Register of Historic Places and any required mitigation, including photographic recordation, will be completed.

3.2.1.2 Anticline Substation

The proposed Anticline Substation is located about 2.5 miles southeast of the Jim Bridger Power Plant, along the east side of Deadman Draw, approximately 30 miles east of Rock

3 Loading is either H-20 or HS-20 based on an axle load of 32 kilo-pounds. This load is divided by the number of tires on each axle.

Springs, Wyoming, as shown on Appendix A, Figure A-4. The proposed substation will consist of a new 500-kV yard constructed southeast of the power plant occupying a fenced area of about 125 acres on private land (Appendix A, Figure A-14). Equipment to be installed within the fenced area includes 500-kV and 345-kV circuit breaker bays and associated equipment, bus supports, high-voltage switches, transmission line termination structures, 500/345-kV transformers, 345-kV phase shifting transformer, 500-kV reactors, 500-kV capacitors, and a new control building to house communications and control equipment. Access to the new 500-kV yard requires improving about 0.5-mile of existing dirt road to a 20- to 24-foot all-weather surface road between the existing Jim Bridger Power Plant access road and proposed Anticline Substation fenceline, improved highway access approaches, and a Union Pacific Railroad crossing. Within the substation site, approximately 0.4 mile of intermittent stream channel will be realigned to provide site drainage. Site development will disturb approximately 150 acres and 140 acres would be required for operations.

The new 500-kV line from the interconnection with Segment 2 (part of Segment 3), the new 500-kV line going to Populus Substation (Segment 4), and the new 345-kV line going to the Jim Bridger 345-kV Substation (Segment 3A) will connect into the Anticline Substation yard.

3.2.1.3 Cedar Hill Substation

The proposed Cedar Hill Substation will be located on public and private land approximately 20 miles southeast of Twin Falls, Idaho, as shown on Appendix A, Figure A-15 as the western terminus of Segment 7. The Cedar Hill Substation is the interconnection point for three new Gateway 500-kV transmission lines. The three lines include the 500-kV line from the Populus Substation (Segment 7), the 500-kV line from the Hemingway Substation (Segment 9), and the 500-kV line from the Midpoint Substation (Segment 10).

Each of the transmission line bays contain high-voltage circuit breakers and switches, bus supports, and control equipment. New 500-kV reactors and 500-kV capacitors will be installed within the fenced area. Transmission line termination structures, approximately 125 to 135 feet tall, will be installed to terminate the 500-kV conductors. A new control building will be constructed to house the 500-kV communications and control equipment for the proposed Gateway 500-kV transmission lines. Approximately 1,000 feet of new access road will be required between the existing county line road and the substation.

Site development will disturb approximately 65 acres and 54 acres will be required for operations.

3.2.2 Existing Substations

The substations described in this section are already operational. Alternative locations for these substations were not considered. The following describes their locations and the modifications proposed as part of the Gateway West Project.

3.2.2.1 Windstar Substation

The Windstar Substation is located on private lands approximately 3.5 miles east of Glenrock, Wyoming, and approximately 1 mile north of the Dave Johnston Power Plant (Appendix A, Figure A-16).

For the Gateway West Project, one expanded 230-kV line bay, including 230-kV circuit breakers and associated equipment, bus supports, high-voltage switches, and transmission line termination structure, will be added to the Windstar Substation to electrically terminate the new

transmission line from the Aeolus Substation (Segment 1W[a]). Site development will disturb approximately 5 acres within the existing substation fenceline.

A new control house will be added or the existing control house will be expanded and/or added to accommodate the necessary system communications and control equipment. The existing access road will be used to reach the site.

3.2.2.2 Dave Johnston Substation

The existing Dave Johnston Substation 230-kV yard (Segment 1W[c]) will be modified to match the proposed capacity of the transmission configuration, Replacement of existing 230-kV circuit breakers, high-voltage switches, tubular and wire bus, bus supports, and transmission line termination structures is required. No expansion of Dave Johnston Substation is proposed and all construction will take place within the existing substation fence. (Appendix A, Figure A-17).

3.2.2.3 Heward Substation

The Heward Substation will be developed on BLM land immediately adjacent to the existing Difficulty Substation, which is located about 45 miles from Bessemer Bend and approximately 34 miles north of Medicine Bow, Wyoming, as shown on Appendix A, Figure A-18. Although operationally independent of the Difficulty Substation, it is in effect an expansion of an existing use. Heward comprises a new 230-kV yard to the west and immediately adjacent to the existing substation fenced area. The Heward 230-kV yard will be required because the existing 230-kV bus and other equipment within the Difficulty Substation is under-rated for accommodating the additional electrical capacity that will be added by rebuilding and reconductoring a portion of the existing Dave Johnston – Rock Springs 230-kV line between the Dave Johnston Power Plant and the planned Aeolus Substation (Proposed Route 1W(c). Adding the new 230-kV yard will increase the flow through capacity of the 230-kV bus and also facilitate maintaining power to Difficulty Substation customers during construction.

Site development will disturb approximately 7 acres and 5 acres will be required for operations.

The new 230-kV yard includes 230-kV circuit breakers, high-voltage switches, bus supports, and transmission line termination structures. The 230-kV transmission line termination structures will be approximately 70 feet tall. A new control house will be constructed within the fenced area to accommodate the necessary system communications and control equipment in the new 230-kV yard. The 230-kV bus will be extended to interconnect to the existing Difficulty Substation 230-kV bus. The existing Difficulty Substation access road will be utilized on the current alignment and state highway entrance. Approximately 500 feet of additional roadway will be developed adjacent to the northern substation fence line to provide alternative equipment access to the Difficulty Substation. The rebuilt Dave Johnston – Heward and Heward – Aeolus 230-kV lines will enter and exit the new substation yard from the north and south as shown in Appendix A, Figure A-19.

3.2.2.4 Shirley Basin Substation

The existing Shirley Basin 230-kV Substation will require the addition of control, protection, and communications equipment to the existing control building. No expansion of Shirley Basin Substation is proposed and all construction will take place within the existing substation fence (Appendix A, Figure A-19).

3.2.2.5 Jim Bridger 345-kV Substation

The existing Jim Bridger Power Plant has a separate 345-kV substation yard located east of the plant (Appendix A, Figure A-20). A 5.5-mile interconnecting 345-kV transmission line between

the new Anticline Substation 500-kV yard and the existing Jim Bridger Substation 345-kV yard (Segment 3A) will be required to electrically connect the two substations. The Jim Bridger 345-kV yard will be expanded by about 10 acres to accommodate the line termination position.

Equipment to be installed within the fenced area includes 345-kV circuit breaker bays and associated equipment, bus supports, high-voltage switches, transmission line termination structures and relocated 345-kV capacitors.

3.2.2.6 Populus Substation

The existing Populus Substation (Figure A-21), located near the town of Downey, Idaho, will be expanded to accommodate the addition of the Gateway West 500-kV transmission lines (Appendix A, Figure A-1). A new 500-kV yard will be constructed in the expansion area north of the existing 345-kV substation yard and interconnected to the existing 345-kV station equipment through a new 500/345-kV transformer bank. Site development will disturb approximately 90 acres and 80 acres will be required for expansion of the existing fence line for operations. (Appendix A, Figure A-21). 500–kV transmission line bays will be installed for connection to the transformer bank and the termination of the three 500-kV line positions for lines to Anticline Substation (Segment 4), Borah Substation (Segment 5), and Cedar Hill Substation (Segment 7).

Each of the transformer and line bays contains high-voltage circuit breakers and switches, bus supports, and control equipment. A new 500/345-kV transformer bank, 500-kV reactors, and 500-kV capacitors will be installed within the fenced area. Transmission line termination structures, approximately 125 to 135 feet tall, will be installed to physically terminate the 500-kV conductors. A new control building will be constructed to house the 500-kV communications and control equipment. The existing access road will be used to reach the site.

3.2.2.7 Borah Substation

The existing Borah Substation is located near American Falls, Idaho (Appendix A, Figure A-8). Expansion of the existing substation requires expansion of the fenced area on private land to accommodate the new 500-kV facilities. Site development will disturb approximately 40 acres and 35 acres will be required for expansion of the existing fence line for operations. The existing Midpoint – Kinport 345-kV line, which currently bypasses the Borah Substation, will be reconnected into an existing 345-kV line bay at this substation and the remaining line segment to Midpoint Substation (Segment 6 – upgrade to 500 kV) and the 500-kV line from Populus Substation (Segment 5) will terminate in the new expansion area. The new 500-kV facilities will be connected to the existing station by the addition of a 500/345-kV transformer bank (Appendix A, Figure A-22).

Each of the transformer and line bays contains high-voltage circuit breakers and switches, bus supports, and control equipment. The new 500/345-kV transformer bank, 500-kV reactors, and 500-kV capacitors will be installed within the fenced area. Transmission line termination structures, approximately 125 to 135 feet tall, will be installed to physically terminate the 500-kV conductors. The existing control building will be enlarged and/or a new control building will be added to house the new 500-kV communications and control equipment. The existing access road will be used to reach the site.

3.2.2.8 Midpoint Substation

The existing Midpoint Substation is approximately 9 miles south of Shoshone, Idaho, on Highway 93 (Appendix A, Figure A-10). The Midpoint Substation will be expanded by 40 acres on private land to accommodate the new Gateway West 500-kV lines. The three 500-kV transmission lines from Hemingway Substation (Segment 8), Cedar Hill Substation (Segment

10), and Borah Substation (Segment 6) will terminate in the expansion area (Appendix A, Figure A-23).

Each of the transmission line bays contains high-voltage circuit breakers and switches, bus supports, and control equipment. New 500-kV reactors and 500-kV capacitors will be installed within the fenced area. Transmission line termination structures, approximately 125 to 135 feet tall, will be installed to physically terminate the 500-kV conductors. The existing control building will be enlarged and/or a new control building will be added to house the 500-kV communications and control equipment for the new Gateway West 500-kV transmission lines. The existing access road will be used to reach the site.

3.2.2.9 Hemingway Substation

The existing Hemingway Substation is located approximately 30 miles southwest of Boise, Idaho, just off of Highway 78 near Wilson Creek Cemetery, shown on Appendix A, Figure A-10 as the western terminus of Segment 8.

The Hemingway Substation has sufficient space planned within the existing fenced area to accommodate the two new 500-kV transmission line bays for Gateway West (Appendix A, Figure A-24). One bay will be for the 500-kV line from the Midpoint Substation (Segment 8) and one for the 500-kV line from the Cedar Hill Substation (Segment 9). Each of the transmission line bays contains high-voltage circuit breakers and switches, bus supports, and control equipment.

New 500-kV reactors and 500-kV capacitors will be installed within the fenced area. Transmission line termination structures, approximately 125 to 135 feet tall, will be installed to physically terminate the 500-kV conductors. The communications and control equipment for the Gateway 500-kV transmission lines will be housed within the existing control building. The existing access road will be used to reach the site.

3.3 Transmission Line Components

Regardless of the route or the structure type chosen, the construction, operation, maintenance, and decommissioning of the transmission line will be conducted as specified in this section. This section provides a general outline of the construction, operations, maintenance, and decommissioning of the transmission line, and references portions of Appendix B, which provides details on each component. Both this section and Appendix B are organized into four parts. The first part describes the components of the transmission line system, including the transmission line itself and its supporting structures, substations, and the communication system. The second part describes the construction techniques and addresses both the permanent alterations and the temporary disturbances needed as well as providing a description of the construction workforce, equipment, and traffic. The third part describes the operations and maintenance of the new system, while the fourth part discusses decommissioning and restoration of the ROW.

3.3.1 System Components

The new transmission system is composed of the transmission structures themselves, the conductors, other hardware, the communications system, access roads, and substations. Each is summarized below and detailed in Appendix B.

3.3.1.1 Construction Disturbance and Land Requirements

Appendix B, Section 3.1.1 details the typical ROW land areas needed for the various components during construction and over the operational life of the Project.

3.3.1.2 Transmission Line System

Appendix B, Section 2.1.1 describes transmission structures, including their types and sizes, the clearances needed between phases of the system and between the lowest conductor and the ground surface, and their foundations. It goes on to describe the conductor types and the other hardware used. Both steel H-frames and lattice steel towers are detailed.

3.3.1.3 Communication System

To control the transmission line and manage the flow of electricity, a sophisticated communication system is required. This communication system's backbone is a fiber optic system contained within one of the overhead ground wires carried along the length of the transmission system. The fiber optic signal needs to be "boosted" or regenerated about every 55 miles along the system, requiring optical signal regeneration stations. These stations consist of a building 12 by 32 by 9 feet tall, a fenced yard, access road, and distribution power supply from the local distribution system. They are typically built close to the transmission line as land use and physical features allow. Details are found in Appendix B, Section 2.4.2.

3.3.1.4 Access Roads

During construction vehicular access will be required to each structure. Appendix B, Section 2.5.1 specifies the typical access roads. New access roads will be constructed and existing roads widened as needed to provide a 14-foot-wide travel way. Roads not required for operations will be restored to their original condition or left as is, depending on landowner/land management agency requirements. Exact locations for roads will be developed during the detailed design phase. Preliminary design has provided indicative locations for roads and laydown yards along the entire ROW. These indicative locations have been used in geographic information system (GIS) analysis to develop the "disturbance footprint" of the Project. While the vast majority of the access roads to be used by the Project will be within the ROW requested, some access roads will be outside the ROW.

Access roads are necessary for access to, and maintenance of, transmission lines, structures or ancillary facilities, but they are not part of the public or federal network of roads. They are generally closed to the public and will be maintained by the Companies and are detailed in Appendix B, Section 2.5.2. With few exceptions, construction access roads become roads needed for operations, although most will be used only infrequently to meet maintenance requirements. Access roads needed for operations and structure construction pads will be revegetated but not recontoured.

3.3.1.5 Multi-Purpose Yards and Fly Yards

Appendix B, Sections 3.2.3 and 3.2.4 provide a general description for multi-purpose yards and fly yards. Exact locations for yards will be developed during the detailed design phase, but preliminary design has provided indicative locations for roads and laydown yards along the entire ROW. These indicative locations have been used in GIS to develop the "disturbance footprint" of the Project. While the vast majority of the multi-purpose yards to be used by the Project would be within the ROW requested, some multi-purpose yards and most fly yards would be outside the ROW. Multi-purpose yards and fly yards are temporary disturbances or temporary uses of areas already developed for storage or other industrial uses.

3.3.1.6 Substations

The description of substations includes their access roads, the types of buildings, transformers, and other infrastructure needed to convert incoming voltage to either another long-distance transmission voltage or to a lower voltage appropriate for distribution to load centers nearby. Details of substation contents are found in Appendix B, Section 2.6.

3.3.2 System Construction

3.3.2.1 Transmission Line Construction

The installation of transmission structures requires preparation of each site where a structure will be installed, including vegetation removal and grading to obtain a relatively flat surface for the operation of the large cranes used to install the structures. Then, either the directly embedded H-frame structure holes need to be drilled or excavated to accept the two poles of each structure, drilled concrete piers are developed for each of three poles for angle structures for the 345-kV structures, or else four foundations for each of the four legs of the lattice steel towers must be established. Appendix B, Table B-2 describes in detail the ranges of foundation sizes, depths, and amounts of concrete needed for each. In addition to the general description of foundation installation, Section 3.5.1 of Appendix B discusses the procedures if rock is encountered and blasting is needed. After the holes are dug for H-frame installation or the foundations completed for the lattice steel towers, the structures are brought in either by truck or by helicopter. If ground transportation is used, cranes will be employed for lifting and installing the structures. Structures are assembled at fly yards if helicopters are used (see also Section 3.5.2 of Appendix B specifying helicopter use procedures).

After the structures are assembled and in place, the conductors and the overhead ground wires will be strung from tower to tower. This is generally accomplished using a helicopter but may be conducted from the ground if the access road travels directly between towers. Details are found in Section 3.2.8 of Appendix B.

3.3.2.2 Communication Systems

Construction of the fiber optic “backbone” of the communication system will be accomplished at the same time as the conductors are strung. Regeneration station construction is also detailed in Section 3.3.1 of Appendix B.

3.3.2.3 Substation Construction

Appendix B, Section 3.4 provides details of substation construction, including development of all-weather access roads, staging areas, clearing and grading of the site, establishment of grounding mats and systems, fencing, foundation excavation, structure and equipment installation, oil containment system installation, control building installation, and finally cleanup and landscaping.

3.3.2.4 Construction Elements

Section 3.6 in Appendix B concludes by providing details of the construction workforce to be employed, the construction equipment and likely daily traffic patterns during the peak of construction, and the proposed construction schedule. Removal of temporary facilities and waste disposal are also discussed.

3.3.3 Operations and Maintenance

The Companies have prepared Project-specific operations and maintenance policies and procedures designed to meet the requirements of the NERC, WECC, and the state public utility

commissions, while remaining in compliance with the applicable codes and standards with respect to maintaining the reliability of the electrical system. Operations and maintenance activities include transmission line patrols, climbing inspections, tower and wire maintenance, insulator washing in selected areas as needed, service roads repairs. Periodic inspection and maintenance is also a key part of operating and maintaining the electrical system. The following key topics are described in detail in Appendix B, Section 4.0:

- Routine system inspection, maintenance, and repair;
- Transmission line maintenance;
- Hardware maintenance and repairs;
- Service road and work area repair;
- Vegetation management; and
- Substation and regeneration site maintenance.

3.3.4 Decommissioning

The projected life of the Gateway West Project is 50 years. Typically, transmission lines that have been maintained through that period will continue to provide service for a much longer lifetime. At the end of the service life of the Project, assuming that it is not upgraded or otherwise kept in service, the structures and conductors would be removed. The substations and regeneration stations, if not needed for other existing transmission line projects, would also be removed. Appendix B, Section 5.0 provides information regarding the removal of materials and the restoration of the sites.

4.0 ENVIRONMENTAL PROTECTION PLANS

This section describes the framework plans included as appendices to this POD that the Companies will use to ensure environmental protection during construction, operation, and maintenance. Each plan will include environmental protection measures (EPMs). These measures have been developed by the Companies to maintain environmental quality and meet requirements of various agencies. For the purposes of ongoing review and discussion with agencies, the measures are included herein as Appendix Z. Once the measures are finalized, they will be incorporated into individual plans. The Companies will be responsible to ensure their contractors and employees will implement these measures. Table 4-1 describes the framework environmental protection plans (EPPs).

The process leading to a set of Final plans is an iterative one that started with initial siting and will end with the submittal of final Plans for protection of resources during construction and restoration details for the permitted route. Framework Plans are an intermediate step to provide each Plan's structure and as much detail as is available at this stage of project development.

Framework Plans

To support the Environmental Impact Statement (EIS) analysis of the Gateway West Project, the Companies developed an indicative layout of centerline location, access roads, multipurpose areas, fly yards and pulling and tensioning sites at a desktop level for the Proposed Route and alternative routes identified by the agencies and other stakeholders that the BLM determined should be analyzed in detail in the EIS. Section 3.1 of the Draft EIS describes that process. Concurrently the Companies developed a series of Framework EPPs.

Appendix C of the POD, the Framework Environmental Compliance Management Plan, provides details of how the Companies will uphold, document, and manage compliance with the requirements of all federal, state, and local permits and landowner agreements. This plan provides a complete approach to third-party monitoring, reporting, and management of construction compliance with the terms and conditions of permits and agreements controlling the Project.

The remaining Framework Plans (Appendices D through R of the POD and summarized in Table 4-1) and the Environmental Protection Measures (EPMs, found in Appendix Z) have been developed as much as possible given the lack of certainty of the approval and permitting process. Note that for the purposes of the May 2012 POD and its September 2012 supplement, Appendix Z represents the Companies' environmental protection measures, including those measures proposed by agencies which the Companies have agreed to incorporate in their project description.

Schedule and Procedure for Final Plan Development

The BLM and other agencies have taken the Project description, including the EPMs listed in Appendix Z of the POD, into consideration during their environmental analysis of the impacts of the project. When the BLM and other agencies have completed that analysis and published it as the Final EIS, the Companies expect that there will be additional requirements imposed beyond those found in the EPMs. Those requirements will be incorporated, together with those EPMs found to be adequate by the agencies, into each of the Final Plans.

Step 1: Additional Engineering Design

The Companies have taken the initiative to move the process of determining the site-specific details forward even before the agencies have issued permits. This at-risk work has been

limited to Phase 1 of the project (Segments 1 through 4) where the Companies feel that there is a strong agreement among federal, state, and local permitting agencies regarding the location of the Preferred Route. In that case, the Companies have invested in additional design engineering, in which the initial desktop design is verified in the field and provided with additional detail through engineering modeling to resolve angle structure locations, clearances and road alignments and grades. In addition, engineering design has taken into account information developed during the environmental analysis and has avoided where feasible such resources as wetlands, sensitive plants, raptor nesting areas, other wildlife sensitive areas, and cultural resources.

The Companies intend to present the results of this at-risk engineering design work to the land managing agencies including the BLM, the USFS, and the BOR as well as to private landowners in a series of meetings covering Segments 1 – 4. The objectives of these meetings are to explain deviations from the centerline as analyzed in the EIS, solicit input on locally known resource issues, and request review and approval of associated facility locations such as access roads, multipurpose yards, regeneration stations, and fly yards. These review meetings will be concluded before the BLM issues the Record of Decision on the environmental analysis and the BLM and other agencies issue their right-of-way grants, special use permits, and other permitting documents.

Step 2: Development, Review, and Approval of Final Plans

The results of these meetings and any revisions requested in the design engineering will provide the basis for the second step for acquiring sufficient site-specific information to finalize each plan. This step will occur after the issuance of a right-of-way grant from the BLM and other permits from other agencies in Wyoming and Idaho. At that time the engineering, procurement, and construction (EPC) contractor will be on board and will complete both the engineering design and the details of each plan for review and approval by the BLM and other permitting agencies.

The chief environmental protection advantage of the EPC process is that the contractor who will be responsible for day to day construction will have been integrally involved in development of the Final EPPs. This ensures that the planning and construction process are synchronized and incorporate feasible solutions.

The Companies, through their EPC contractor, will submit each plan to the agencies for review and approval. When the plans have all been reviewed and revised if needed, they will be incorporated into the Construction POD. The Construction POD will be submitted with site-specific information for each Notice to Proceed (NTP) to Construction. The Companies and the BLM have agreed that the Project will receive a single ROD but a series of NTPs that reflect the Companies' construction priorities. The Companies expect that each NTP will be issued only when the BLM and other agencies are satisfied that the Construction POD for that portion of the Project contains sufficient detail to adequately protect environmental resources and restore the area after construction.

Plan Implementation

The Companies will ensure that their contractors and employees implement these measures following the procedures in the Environmental Compliance Management Plan. The Companies and BLM have agreed on the use of a third-party Construction Inspection Contractor (CIC) to act on the behalf of land managing and other regulatory agencies and provide environmental compliance oversight during construction. The CIC will be selected by the BLM and other agencies but paid for by the Companies. The Companies anticipate that the CIC will be selected and hired prior to issuance of requested the right-of-way grants and special use

authorizations, respectively, to allow adequate time for the CIC to review documents and develop on-the-ground familiarity with the Project. The CIC will be authorized to enforce the POD on BLM- and USFS-administered lands. The CIC will also ensure BLM and USFS responsibilities under the NHPA and ESA are met on non-federal lands and disturbance on non-federal lands is consistent with the analysis in the EIS.

Table 4-1. Environmental Protection Plans

Framework Plan	Preliminary Plan or Environmental Protection Measures	Final Plan
The **Environmental Compliance Management Plan** will be the primary guidance document that states how the Companies will uphold, document, and manage compliance with the right-of-way grant, the POD, landowner agreements, and all federal, state, and local permits. It is a centralized Project environmental compliance reference and is thereby intended to facilitate environmental compliance across the entire Project.	Included in POD as Appendix C.	Construction POD and COM Plan
The **Framework Reclamation Plan** will include site-specific construction mitigation, reclamation, and revegetation measures for each land management area crossed by the ROW within BLM-managed and National Forest lands. It will combine the Companies' BMPs with site-specific mitigation developed in consultation with agencies. Some measures will apply Project-wide, while others will be designed for specific areas.	Included in POD as Appendix D. Environmental protection measures (EPMs) provided in Appendix Z.	Construction POD and COM Plan
The **Framework Noxious Weed Plan** will provide methods to control the potential occurrence/infestation of noxious and invasive weeds during and following construction of the Project. The purpose of the plan is to ensure noxious weeds are identified and controlled during the construction of project facilities and all federal, state, county, and other local requirements are satisfied.	Included in POD as Appendix E. EPMs provided in Appendix Z.	Construction POD and COM Plan
The **Framework Stormwater Pollution Prevention Pl**an will include measures for temporary and permanent erosion and sediment control that will be used during construction, operation, and maintenance of the transmission line and ancillary facilities.	Included in POD as Appendix F. EPMs provided in Appendix Z.	Construction POD and COM Plan
The **Framework Spill Prevention, Containment, and Countermeasures Plan** will include measures for spill prevention practices, requirements for refueling and equipment operation near waterbodies, procedures for emergency response and incident reporting, and training requirements.	Included in POD as Appendix G. EPMs provided in Appendix Z.	Construction POD and COM Plan
The **Framework Plant and Wildlife Conservation Measures Plan** will present the measures proposed by the Companies for avoidance and minimization of impacts to special status plant and wildlife species as related to construction activities for the Project and outlines specific conservation measures to be implemented in the event that state or Federally listed species, BLM sensitive species, or Forest Service special status species or their habitats are identified within or adjacent to the Project right-of-way.	Included in POD as Appendix H. EPMs provided in Appendix Z. Compensatory mitigation plan for impacts to sage-grouse habitat submitted to the BLM under separate cover.	Construction POD and COM Plan
The Framework Stream, Wetland, Well, and Spring Protection Plan will provide measures to protect these resources from potential impacts during construction, operation, and maintenance activities. The goals of this plan are to control Project-related erosion and sedimentation into streams and wetlands and minimize disturbance and erosion of streambeds and banks and protect springs and wells in the Project area from impacts due to blasting and hazardous materials contamination.	Included in POD as Appendix I. EPMs provided in Appendix Z. Compensatory mitigation plan for impacts to Waters of the U.S. submitted to the BLM under separate cover.	Construction POD and COM Plan
The Framework Paleontological Resources Protection Plan will identify the mitigation measures needed to avoid or reduce project-related impacts to paleontological resources, wherever feasible. This plan provides important background and contextual information useful for the paleontological resources mitigation program.	Included in POD as Appendix J. EPMs in Appendix Z.	Construction POD and COM Plan

Table 4-1. Environmental Protection Plans (continued)

Framework Plan	Preliminary Plan or Environmental Protection Measures	Final Plan
The **Framework Agricultural Protection Pl**an will include measures intended to mitigate or provide compensation for agricultural impacts that may occur due to construction of the Project. The measures will be intended to be implemented on partially or wholly owned private agricultural land unless directed otherwise by the landowner. Agricultural land will be defined to include that which is annually cultivated or rotated cropland; land in perennial field crops, improved pasture; hayfields; and land in the Conservation Reserve Program.	Included in POD as Appendix K. EPMs provided in Appendix Z.	Construction POD and COM Plan
The **Framework Traffic and Transportation Management Plan** will include measures that require compliance with federal policies and standards relative to planning, siting, improvement, maintenance, and operation of roads for the Project.	Included in POD as Appendix L. EPMs provided in Appendix Z.	Construction POD and COM Plan
The **Framework Blasting Plan** will outline methods to prevent adverse impacts to human health and safety, property, and the environment that could potentially result from the use of explosives during project construction and mitigate risks and potential impacts associated with blasting procedures that may be required for construction. The plan will provide all levels of construction personnel project-specific information concerning blasting procedures, including the safe use and storage of explosives.	Included in POD as Appendix M. EPMs provided in Appendix Z.	Construction POD and COM Plan
The **Framework Dust Control and Air Quality Plan** will provide measures to ensure protection of the air quality that will be affected by the Project. This plan is to be implemented during the construction, operation, and maintenance phases of the Project. These measures are intended to minimize dust and emissions from construction-related activities.	Included in POD as Appendix N. EPMs provided in Appendix Z.	Construction POD and COM Plan
The **Framework Fire Prevention and Suppression Plan** will include measures to be taken by the Companies and its contractors to ensure that fire prevention and suppression measures are carried out in accordance with federal, state, and local regulations. The plan will address the specific requirements of the Forest Service and BLM handbooks and provide BMPs for fire management on privately owned lands..	Included in POD as Appendix O. EPMs provided in Appendix Z.	Construction POD and COM Plan
The **Framework Hazardous Material Management Plan** will reduce the risks associated with the use, storage, transportation, production, and disposal of hazardous materials (including hazardous substances and wastes). This Plan will identify Project-specific mitigation measures and other specific stipulations and methods to address spill prevention, response, and cleanup procedures for the Project.	Included in POD as Appendix P. EPMs provided in Appendix Z.	Construction POD and COM Plan
The Framework Construction Emergency Preparedness and Response Plan will provide an overview of methods to be implemented if the need for emergency management is imminent. This document will the existing support structure, chain of command, and emergency communications protocols to be used as a guide for an Emergency Preparedness and Response Plan to be completed by the Construction Contractor	Included in POD as Appendix Q. EPMs provided in Appendix Z.	Construction POD and COM Plan
The Framework Operations, Maintenance, and Emergency Response Plan will include measures to be employed while conducting routine, corrective, and emergency operations and maintenance activities. Measures identified will be in compliance with applicable state and federal laws and policies; ensure consistency across and within federal jurisdictions; and allow for the Companies to access the transmission line and ancillary facilities in a timely, cost effective, and safe manner.	Included in POD as Appendix R. EPMs provided in Appendix Z.	Construction POD and COM Plan

Table 4-1. Environmental Protection Plans (continued)

Framework Plan	Preliminary Plan or Environmental Protection Measures	Final Plan
The **Cultural Resources Protection and Management Measures** will include the procedures undertaken to inventory, evaluate, and protect cultural resources. It describes the treatment of any eligible or listed resource that cannot be avoided, and procedures for handling inadvertent discoveries during construction, operation, and maintenance.	General EPMs provided in Appendix Z. Final measures will be based on the Programmatic Agreement and the Historic Properties Treatment Plan. Draft HPTP with framework compensatory mitigation plan for impacts to historic trails submitted under separate cover to the BLM.	Construction POD and COM Plan

5.0 LITERATURE CITED

BLM. 1983. Bruneau Management Framework Plan, Step 3 – Decisions.

BLM. 1984. Platte River Resource Management Plan, Wyoming.

BLM. 1985 (1988). Cassia Resource Management Plan (and Amendment), Burley District, Idaho.

BLM. 1986. Lander Resource Management Plan, Wyoming.

BLM. 1986. Shoshone Monument Resource Management Plan, Shoshone District, Idaho.

BLM. 1987. Cascade Proposed Resource Management Plan and Final Environmental Impact Statement, Boise District, Idaho.

BLM. 1987. Jarbidge Resource Management Plan, Boise District, Idaho.

BLM. 1990. Great Divide Resource Management Plan, Wyoming.

BLM. 1990. Kuna Management Framework Plan, Idaho.

BLM. 1997. Green River Resource Management Plan. Rock Springs Field Office, Wyoming.

BLM. 1999. Owyhee Resource Management Plan, Lower Snake River District, Boise Field Office, Idaho.

BLM. 2004. Fire, Fuels, and Related Vegetation Management Direction Plan Amendment and Environmental Impact Statement, Upper Snake River District, Idaho.

BLM. 2006, Birds of Prey Resource Management Plan, Boise District Office, Idaho.

BLM. 2006. Pocatello Resource Management Plan and Environmental Impact Statement. Pocatello Field Office, Idaho.

BLM. 2007. Kemmerer Resource Management Plan. Kemmerer Field Office, Wyoming.

BLM. 2007. Overland Pass Natural Gas Liquids Pipeline Environmental Impact Statement. BLM/WY/PL-07/026+5101 AS-06-01095. Wyoming State Office and Rawlins Field Office, Wyoming.

BLM. 2007. Record of Decision and Approved Casper Resource Management Plan, Casper Field Office, Wyoming.

BLM. 2007. Surface Operating Standards and Guidelines for Oil and Gas Exploration and Development. BLM/WO/ST-06/021+3071/REV 07. Denver, Colorado. 84 pp.

BLM. 2008. Rawlins Resource Management Plan and Environmental Impact Statement. Rawlins Field Office, Wyoming.

BLM 2011. Draft Environmental Impact Statement for the Gateway West Transmission Line Project. Wyoming State Office, Cheyenne, WY.

BPA. 2012. Letter requesting comments on options for service to Southeast Idaho. http://transmission.bpa.gov/Customer_Forums/se_idaho/docs/SILS-

CommentPeriodLetter_20120806.pdf and http://transmission.bpa.gov/Customer_Forums/se_idaho/docs/SILS-CommentPeriod-SupportingDocumentation%20_20120806.pdf

BPA. 2012a. Letter announcing selection of priority project for service to Southeast Idaho. http://transmission.bpa.gov/Customer_Forums/se_idaho/docs/SILS_Prioritization_Letter_10-01-12.pdf

DOE (United States Department of Energy) and BLM. 2008. West-wide Energy Corridor Programmatic Environmental Impact Statement (Energy Corridor PEIS). Available online at http://corridoreis.anl.gov/index.cfm.

DOE. 2006. National Electric Transmission Congestion Study. Available online at http://www.oe.energy.gov/DocumentsandMedia/Congestion_Study_2006-10.3.pdf

DOI (U.S. Department of the Interior) and BLM 2004. Craters of the Moon National Monument and Preserve Idaho Draft Management Plan/Environmental Impact Statement.

DOI and BLM 2007. Craters of the Moon National Monument and Preserve Management Plan.

FAA (Federal Aviation Administration). 2000. Advisory Circular AC 70/7460-1k Obstruction Marking and Lighting. August 1.

FERC (Federal Energy Regulatory Commission). 2008. Order-890. Pro Forma Open Access Transmission Tariff, Appendix C.

Forest Service (U.S. Department of Agriculture Forest Service) 2003. Caribou Targhee National Forest Revised Forest Plant and Final Environmental Impact Statement, Idaho.

Forest Service 2003. Medicine Bow National Forest Revised Land and Resource Management Plan, Rocky Mountain Region, Wyoming.

Gerrard, Darrell T. 2010. Affidavit. Testimony before the Utah Facility Review Board. Rocky Mountain Power v. Tooele County. August 4. Available online at: http://psc.utah.gov/utilities/electric/elecindx/2010/1003539indx.html

Idaho Power Company and PacifiCorp. 2008. Gateway West Transmission Line Project Siting Study.

Idaho Power. 2008a. 2008 Integrated Resource Plan Update. Available online at http://www.idahopower.com/energycenter/irp/2006/2006IRPFinal.htm.

Idaho Power. 2008. Open Access Transmission Tariff. Available on Open Access Same Time Information System (OASIS) Web site at http://www.oatioasis.com/IPCO/IPCOdocs/IPC_OATT_Vol_6_Issued_2007-12-14.pdf

Idaho Power. 2008. Transmission Line Clearing Specifications. February.

Idaho Power. 2008. Avian protection plan.

IPC. 2009. 2009 Integrated Resource Plan. Boise, Idaho. December. Available online at http://www.idahopower.com/pdfs/AboutUs/PlanningForFuture/irp/2009/2009IntegratedResourcePlan.pdf

IPC. 2011. 2011 Integrated Resource Plan. Boise, Idaho. June. Available online at http://www.idahopower.com/pdfs/AboutUs/PlanningForFuture/irp/2011/2011IRPFINAL.pdf

IDEQ (Idaho Department of Environmental Quality). 2008. Accessed online at http://www.deq.state.id.us/. February 2008.

IEEE. (Institute of Electrical and Electronics Engineers) 2007. National Electrical Safety Code. New York, NY.

NACE International. 2003. Mitigation of Alternating Current and Lightning Effects on Metallic Structures and Corrosion Control Systems.

NERC (North American Electrical Reliability Corporation). 2012. NERC: About NERC [Internet]. Available online at: http://www.nerc.com/page.php?cid=1

NTTG (Northern Tier Transmission Group). 2007. Fast Track Study. Available online at http://nttg.biz/site/index.php?option=com_frontpage&Itemid=1

PacifiCorp. 2007. Integrated Resource Plan. Available online at http://www.pacificorp.com/Navigation/Navigation23807.html

PacifiCorp. 2007. Preliminary Plan of Development for Bureau of Land Management, Wyoming State Office. Jim Bridger to Crystal 500kV Transmission Project.

PacifiCorp. 2007. Preliminary Plan of Development for Bureau of Land Management, Wyoming State Office. Dave Johnston to Melba 500-kV and 345-kV Transmission Project.

PacifiCorp. 2007. Transmission and Distribution Vegetation Management Program, Specification Manual. June 1.

PacifiCorp. 2008. Open Access Transmission Tariff. Available on Open Access Same Time Information System (OASIS) Web site at http://www.oasis.pacificorp.com/oasis/ppw/SEVENTHREVISEDVOLUME11.PDF

PacifiCorp. 2011. 2011 Integrated Resources Plan. Volumes I and II. Filed March 31, 2011, with Idaho, Oregon, Utah, Washington and Wyoming public utilities commissions. Portland, OR. Available online at http://www.rockymountainpower.net/about/irp.html

RMATS (Rocky Mountain Area Transmission Study). 2004. Phase 1 Report. Available online at http://psc.state.wy.us/htdocs/subregional/FinalReport/rmatsfinalreport.htm.

WECC (Western Electricity Coordinating Council) Seams Steering Group-Western Interconnection (SSG-WI). 2005. Available online at http://wecc.biz/modules.php?op=modload&name=Downloads&file=index&req=viewsdownload&sid=179

WECC (Western Electricity Coordinating Council). 2011. About WECC [Internet]. Available online at: http://www.wecc.biz/About/Pages/default.aspx

WECC. 2008. Available online at http://www.wecc.biz/documents/library/Standards/Criteria/TPLstd001-004_4-28-08%20clean.pdf. Accessed May 1, 2008.

APPENDIX A
PROPOSED ROUTE AND SUBSTATION MAPS AND FIGURES

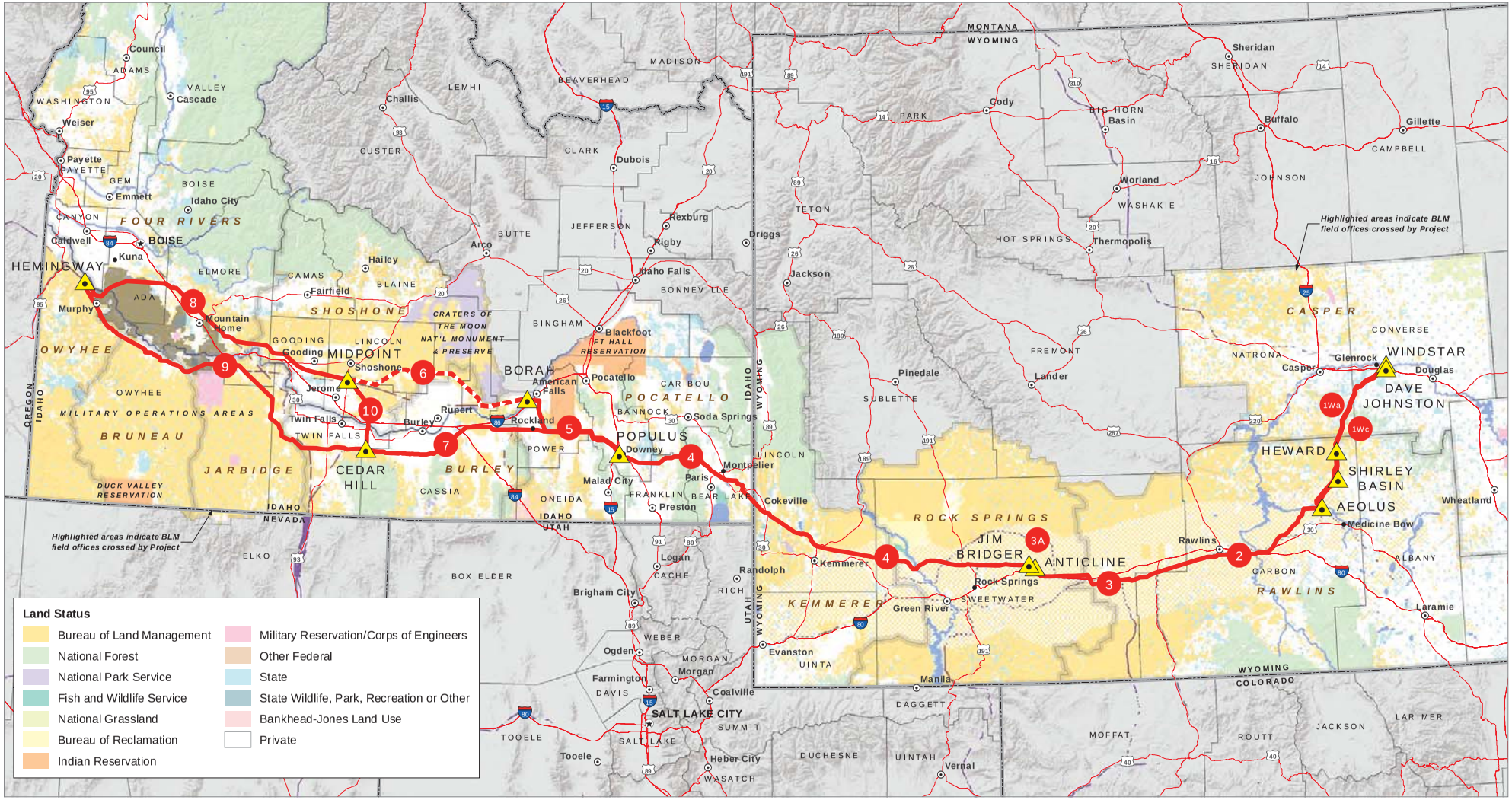

Enlarged Area Above

0 40 Miles

NAD 1983 UTM Zone 12N

Route Features

- Proposed Route
- Energize Existing 345-kV to 500-kV
- Substation
- Segment Number

Other Features

- State Capital
- County Seat
- Other City/Town
- County
- BLM Field Office
- Morley Nelson Snake River Birds of Prey NCA
- West Wide Energy Corridor (WWEC)

ROCKY MOUNTAIN POWER

IDAHO POWER

Gateway West
Transmission Line Project

Project Overview
Figure A-1

Sources | BLM; USFS; ESRI

SF299_POD FIG A-1 Project Overview_20120918 Saved | 9/18/2012

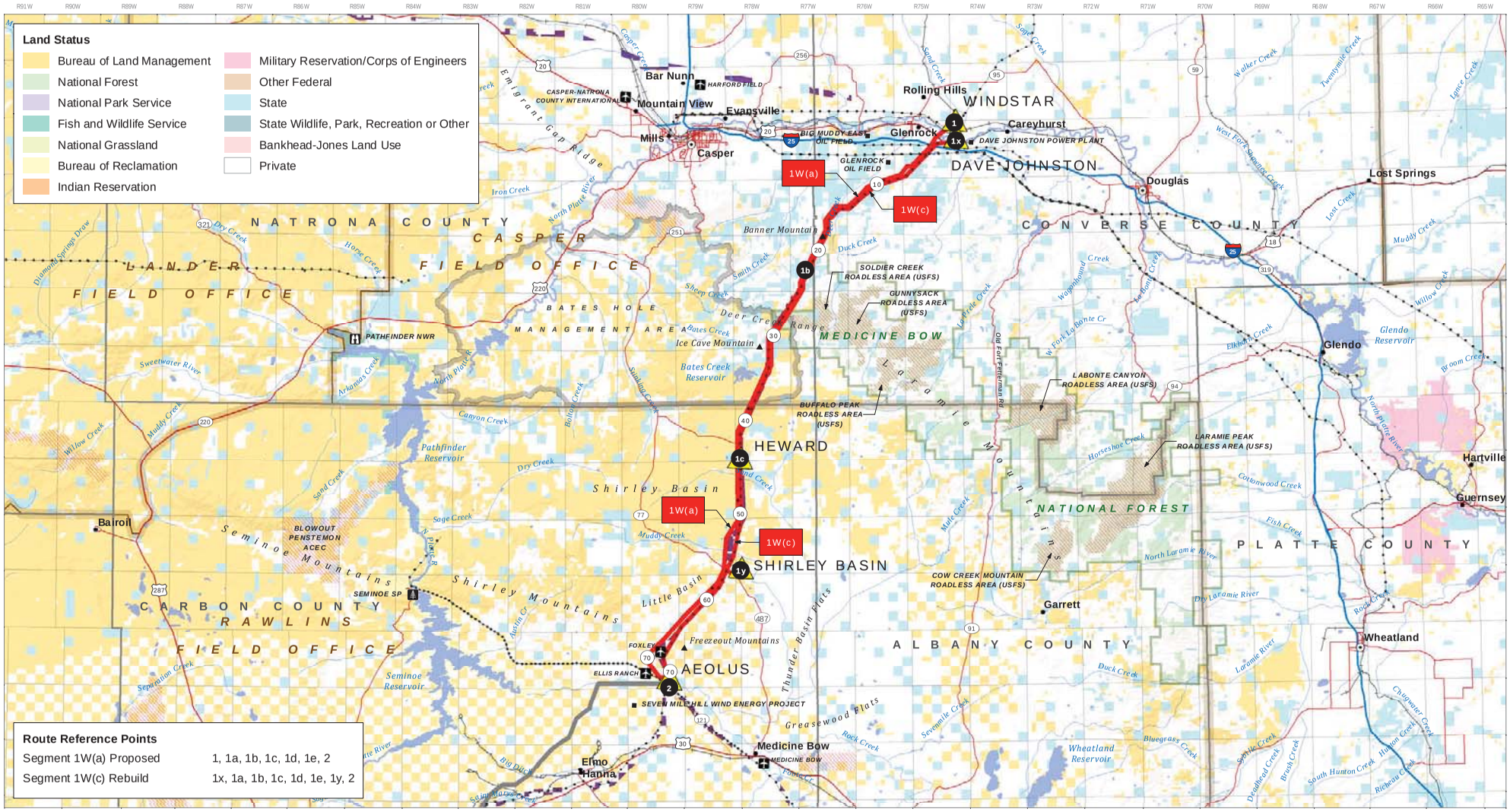

Sources | BLM; USFS; ESRI

SF299_POD FIG A-2 Segment 1W_20120918 Saved | 9/18/2012

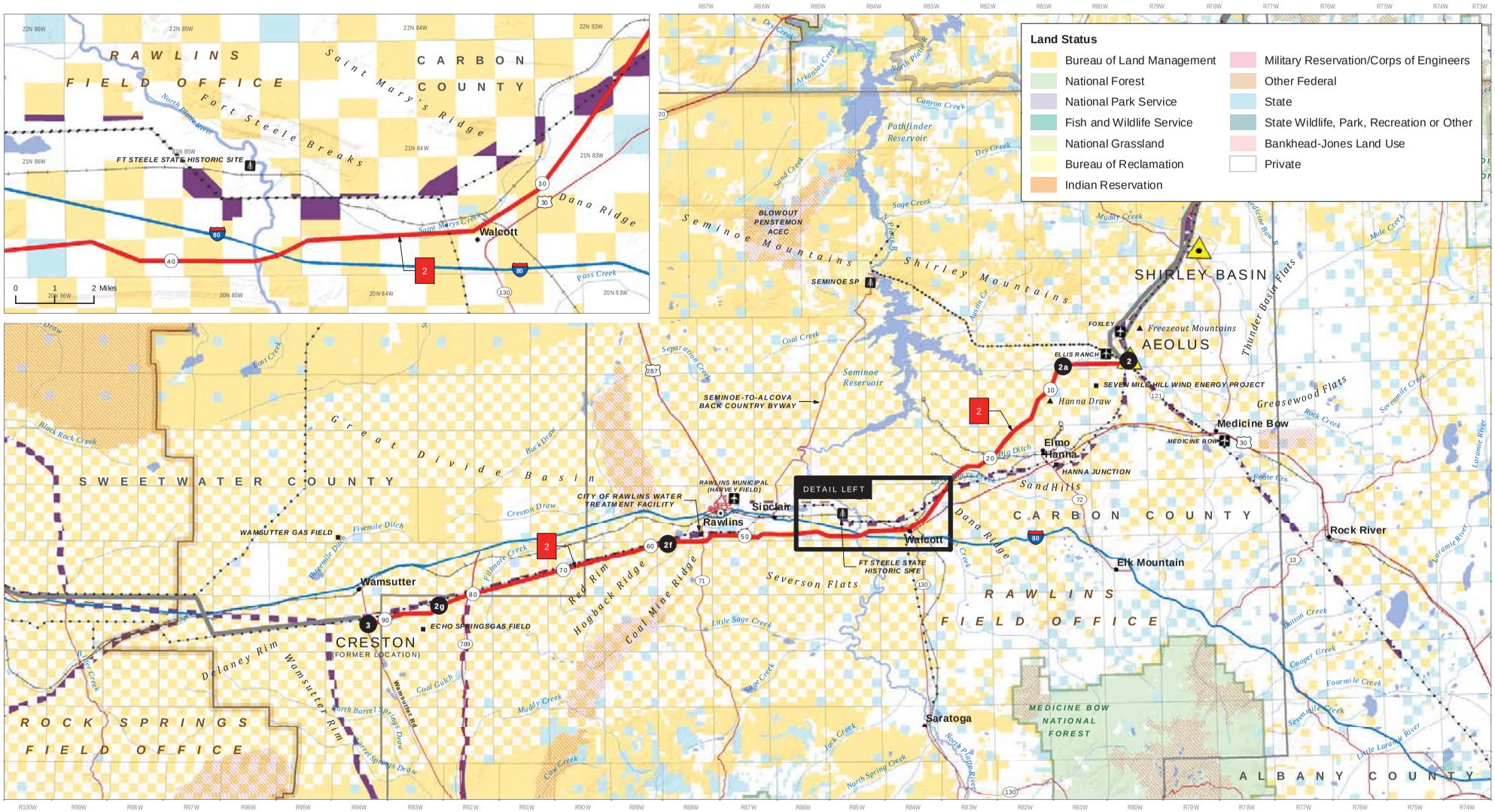

ROCKY MOUNTAIN POWER

IDAHO POWER

Gateway West
Transmission Line Project

Segment 2
Aeolus to Creston
Figure A-3

Sources | BLM; USFS; ESRI

SF299_POD FIG A-3 Segment 2_20120918 Saved | 9/18/2012

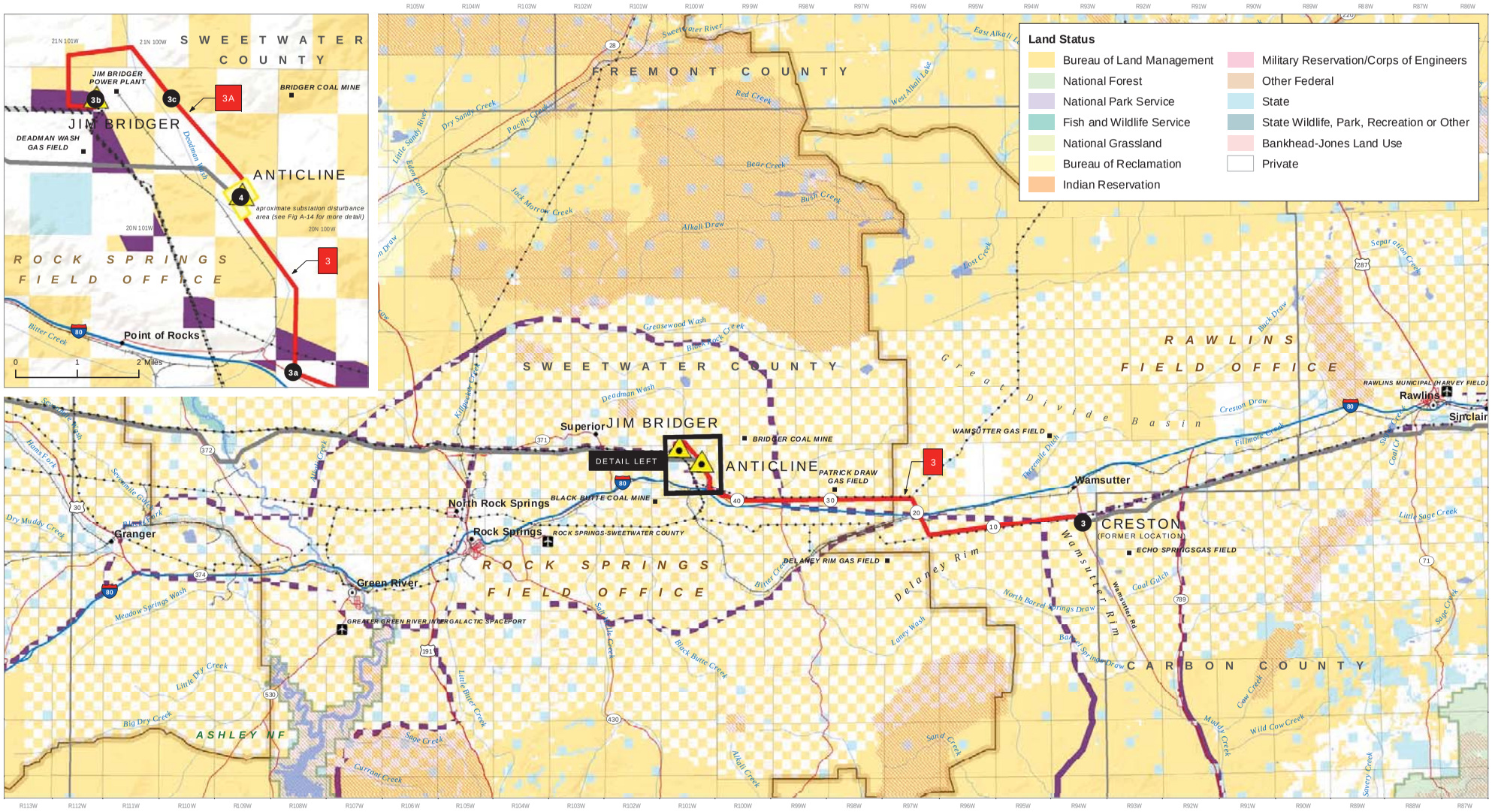
SWEETWATER COUNTY
JIM BRIDGER POWER PLANT
BRIDGER COAL MINE
JIM BRIDGER
DEADMAN WASH GAS FIELD
ANTICLINE
aproximate substation disturbance area (see Fig A-14 for more detail)
ROCK SPRINGS FIELD OFFICE
Point of Rocks
3A
3
3b
3c
3a
4
Land Status
Bureau of Land Management
National Forest
National Park Service
Fish and Wildlife Service
National Grassland
Bureau of Reclamation
Indian Reservation
Military Reservation/Corps of Engineers
Other Federal
State
State Wildlife, Park, Recreation or Other
Bankhead-Jones Land Use
Private
FREMONT COUNTY
SWEETWATER COUNTY
RAWLINS FIELD OFFICE
Great Divide Basin
Superior
JIM BRIDGER
BRIDGER COAL MINE
DETAIL LEFT
ANTICLINE
PATRICK DRAW GAS FIELD
WAMSUTTER GAS FIELD
BLACK BUTTE COAL MINE
North Rock Springs
Rock Springs
ROCK SPRINGS-SWEETWATER COUNTY
Granger
Green River
GREATER GREEN RIVER INTERGALACTIC SPACEPORT
DELANEY RIM GAS FIELD
Wamsutter
CRESTON
(FORMER LOCATION)
ECHO SPRINGSGAS FIELD
Delaney Rim
Wamsutter Rim
CARBON COUNTY
ASHLEY NF
RAWLINS MUNICIPAL (HARVEY FIELD)
Rawlins
Sinclair
Deadman Wash
Bitter Creek
Greasewood Wash
Black Rock Creek
Killpecker Creek
Alkali Creek
Dry Muddy Creek
Little Dry Creek
Big Dry Creek
Meadow Springs Wash
Little Bitter Creek
Black Butte Creek
Sand Creek
Muddy Creek
Wild Cow Creek
Savery Creek
Creston Draw
Fillmore Creek
Little Sage Creek
Sage Creek
Coal Gulch
Wamsutter Rd
Laney Wash
Currant Creek
Red Creek
Bear Creek
Alkali Draw
Jack Morrow Creek
Pacific Creek
Dry Sandy Creek
Sweetwater River
West Alkali Lake
Separation Creek
Back Draw
Bush Creek
Lost Creek
Coal Cr
Sweetwater Canal
Hams Fork
Scrubgrass Creek
Alkali Creek
Little Sand Creek
Bitter Creek
Cow Creek
Sand Creek
Alkali Creek
Current Creek
Little Bitter Creek
Silver Creek
Bitter Creek
North Barrel Springs Draw
Barrel Springs Draw
Thermale Ditch
Enlarged Area Above
Miles
NAD 1983 UTM Zone 12N
Route Features
Proposed Route
Other Route
Reference Point
Mile
Substation
Existing Transmission Line (115kV greater)
West Wide Energy Corridor (WWEC)
Other Features
BLM Field Office
National Forest
County
Restricted Access
Railroad
Interstate
US Highway
Secondary State or County Road
Airport/Landing Strip
Park/Recreation Area
Wildlife Area
Stream/River
Waterbody
ROCKY MOUNTAIN POWER
IDAHO POWER
Gateway West
Transmission Line Project
Segment 3
Creston to Anticline/Bridger
Figure A-4
Sources | BLM; USFS; ESRI
SF299_POD FIG A-4 Segment 3_20120918 Saved | 9/18/2012

Land Status
Bureau of Land Management
National Forest
National Park Service
Fish and Wildlife Service
National Grassland
Bureau of Reclamation
Indian Reservation
Military Reservation/Corps of Engineers
Other Federal
State
State Wildlife, Park, Recreation or Other
Bankhead-Jones Land Use
Private
CARIBOU-TARGHEE NAT'L FOREST
BRIDGER-TETON NATIONAL FOREST
SUBLETTE COUNTY
LINCOLN COUNTY
SWEETWATER COUNTY
UINTA COUNTY
ROCK SPRINGS FIELD OFFICE
KEMMERER FIELD OFFICE
ASHLEY NF
IDAHO
WYOMING
UTAH
Montpelier
BEAR LAKE COUNTY
RAYMOND MOUNTAIN WSA
LAKE ALICE-COMMISSARY RIDGE ROADLESS AREA (USFS)
La Barge
Big Sandy Reservoir
Fontenelle Reservoir
Queaty Reservoir
Cokeville
COKEVILLE MUNICIPAL
COKEVILLE MEADOWS NWR
South Fork Mountain
Coke Mountain
Dempsey Basin
Viva Naughton
Pomeroy Basin
SHUTE CREEK GAS FIELD
ROCK CREEK RIDGE SPECIAL MANAGEMENT AREA
FOSSIL BUTTE NM
KEMMERER MUNICIPAL
Kemmerer
Diamondville
Opal
NAUGHTON POWER PLANT
TRONA MINING (ACTIVE)
BEAR RIVER SPECIAL MANAGEMENT AREA
CHEVRON COAL MINE
WHISKEY BUTTE SEVEN MILE GULCH GAS FIELDS
SEEDSKADEE NWR
Big Island
TRONA MINE
Stevens Flat
Granger
Superior
JIM BRIDGER
JIM BRIDGER POWER PLANT
ANTICLINE
Point of Rocks
BAXTER BASIN NORTH GAS FIELD
North Rock Springs
Rock Springs
BLACK BUTTE COAL MINE
ROCK SPRINGS-SWEETWATER COUNTY
Green River
GREATER GREEN RIVER INTERGALACTIC SPACEPORT
FLAMING GORGE NAT'L RECREATION AREA
Flaming Gorge Reservoir
Randolph
Evanston
Lyman
Mountain View
FORT BRIDGER
Bear Lake
Bear River
Big Sandy River
Green River
Blacks Fork
Little Muddy Creek
Dry Muddy Creek
Meadow Springs Wash
Little Dry Creek
Big Dry Creek
Sage Creek
Curant Creek
Little Sandy River
Greasewood Wash
Deadman Wash
Black Rock Creek
Alkali Draw
Stagecoach Draw
Washington Draw
Buckhorn Canyon
Simpson Gulch
Slate Creek
Fourmile Gulch
West Buckhorn Draw
Fontenelle Creek
La Barge Creek
Dry Piney Creek
Little Muddy Creek
Bitter Creek
Black Butte Creek
Little Bitter Creek
Salt Wells Creek
Laney Wash
Sand Creek
Alkali Creek
Bear Lake Outlet
Otter Creek
Big Creek
Woodruff Creek
Dry Creek
Solderdus Creek
Sater Hollow
Lost Creek
Yellow Creek
Albert Creek
Rock Creek
Muddy Creek
Smith Fork
Rock Creek
Bear River Valley
Boundary Ridge
Dempsey Ridge
Commissary Ridge
Oyster Ridge
Whiskey Basin
Moxa Arch
North Baxter Basin
Bear River Canal
Blacks Fork Canal
Bear Lake Canal
Rock Springs Canal
Flume Creek
Fontenelle Creek
Smith Fork
Dry Piney Creek
Slate Creek
Green River
Big Sandy River
Little Sandy River
Eden Canal
Morrow Creek
Shute Creek
Big Island
Alkali Creek
Flume Creek
Rock Creek
Albert Creek
Muddy Creek
Little Muddy Creek
Dry Muddy Creek
Blacks Fork
Little Dry Creek
Big Dry Creek
Sage Creek
Curant Creek
Little Bitter Creek
Bitter Creek
Salt Wells Creek
Black Butte Creek
Alkali Creek
Sand Creek
Laney Wash
Greasewood Wash
Deadman Wash
Black Rock Creek
Alkali Draw
Stagecoach Draw
Washington Draw
Buckhorn Canyon
Simpson Gulch
Slate Creek
Fourmile Gulch
West Buckhorn Draw
Fontenelle Creek
La Barge Creek
Dry Piney Creek
Bear Lake Outlet
Otter Creek
Big Creek
Woodruff Creek
Dry Creek
Solderdus Creek
Sater Hollow
Lost Creek
Yellow Creek
Bear River
Big Sandy River
Green River
Blacks Fork
Little Muddy Creek
Dry Muddy Creek
Meadow Springs Wash

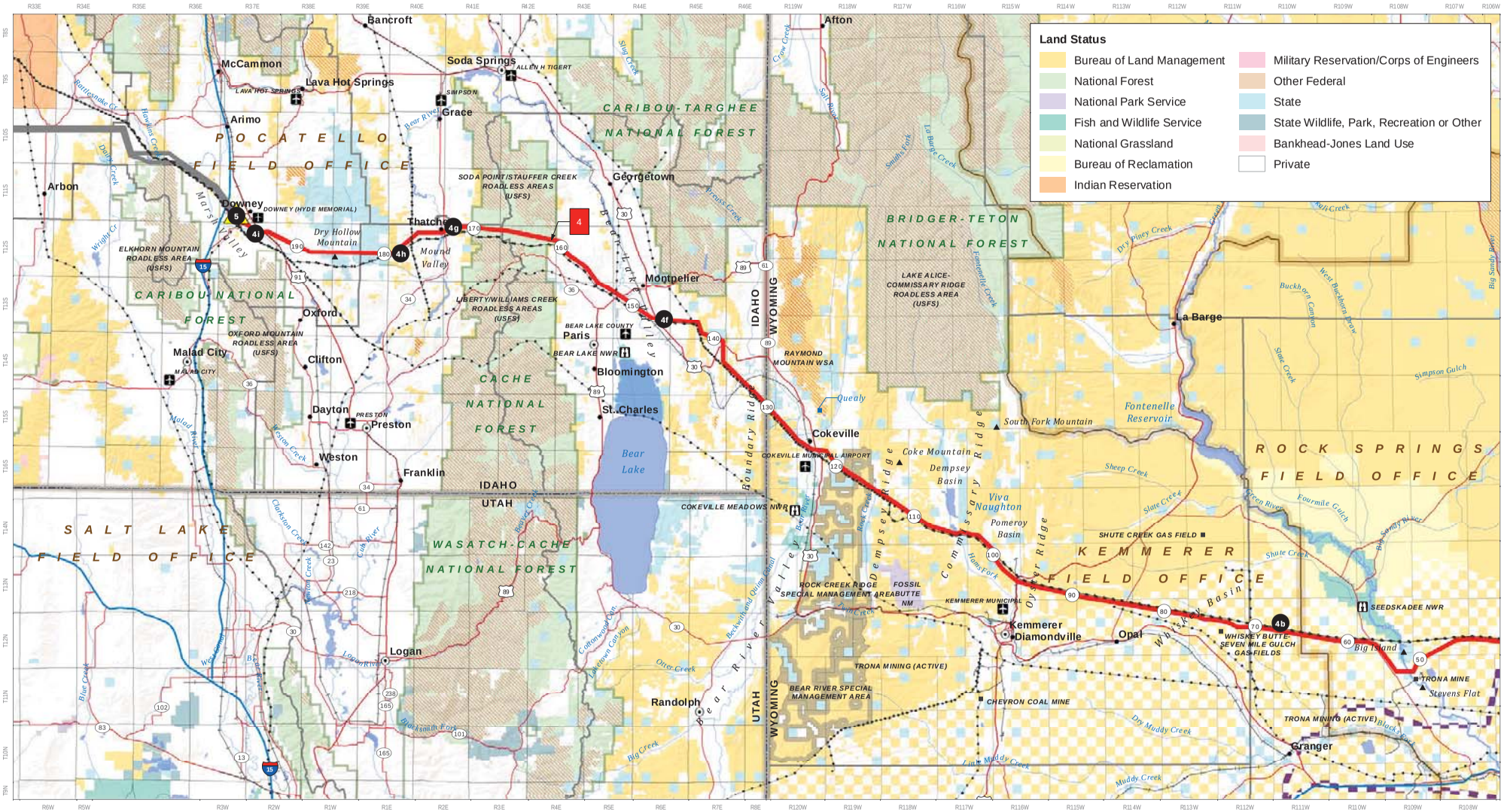

Gateway West
Transmission Line Project

Segment 4-ID
Wyoming/Idaho to Populus
Figure A-6

Sources | BLM; USFS; ESRI

SF299_POD FIG A-6 Segment 4-ID_20120918 Saved | 9/18/2012

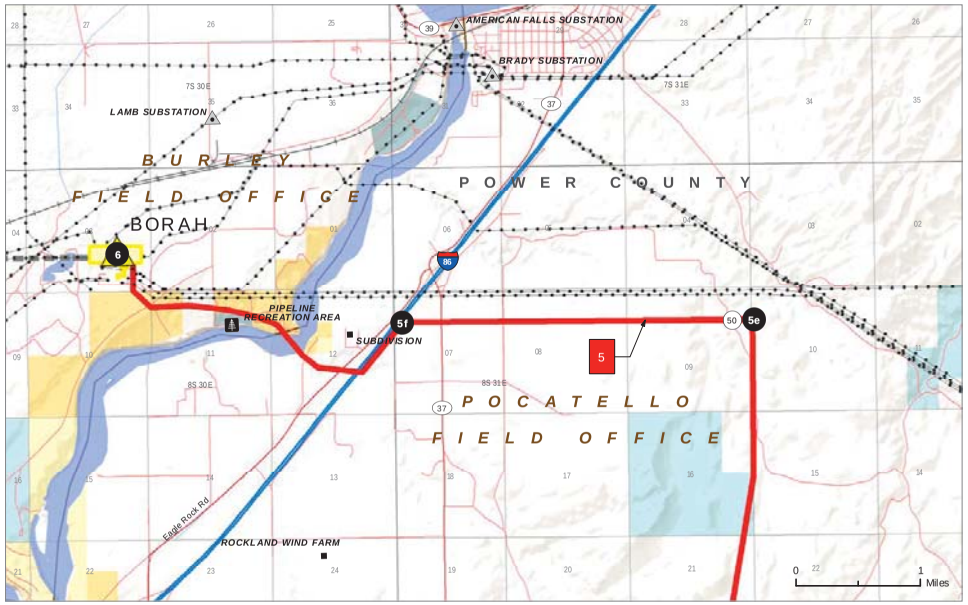

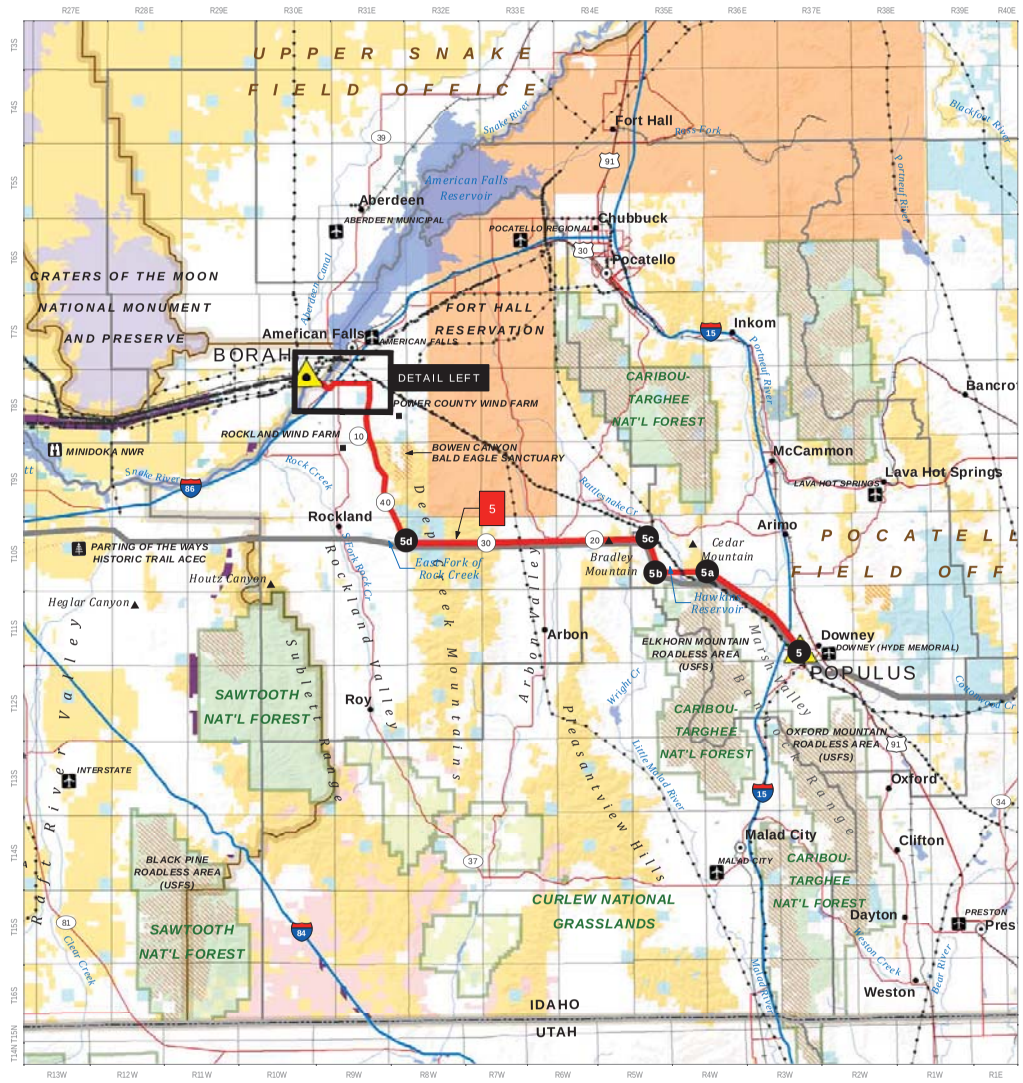

Land Status

- Bureau of Land Management
- National Forest
- National Park Service
- Fish and Wildlife Service
- National Grassland
- Bureau of Reclamation
- Indian Reservation
- Military Reservation/Corps of Engineers
- Other Federal
- State
- State Wildlife, Park, Recreation or Other
- Bankhead-Jones Land Use
- Private

0 10 Miles

NAD 1983 UTM Zone 12N

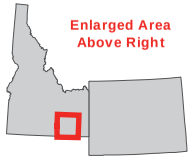

Enlarged Area Above Right

Route Features

- Proposed Route
- Other Route

- Reference Point
- Mile
- Substation
- Existing Transmission Line (115kV greater)
- West Wide Energy Corridor (WWEC)

Other Features

- BLM Field Office
- National Forest
- County
- Restricted Access

- Railroad
- Interstate
- US Highway
- Secondary State or County Road

- Airport/Landing Strip
- Park/Recreation Area
- Wildlife Area
- Stream/River
- Waterbody

ROCKY MOUNTAIN POWER
IDAHO POWER

Gateway West
Transmission Line Project

Segment 5
Populus to Borah
Figure A-7

Sources | BLM; USFS; ESRI

SF299_POD FIG A-7 Segment 5_20120918 Saved | 9/18/2012

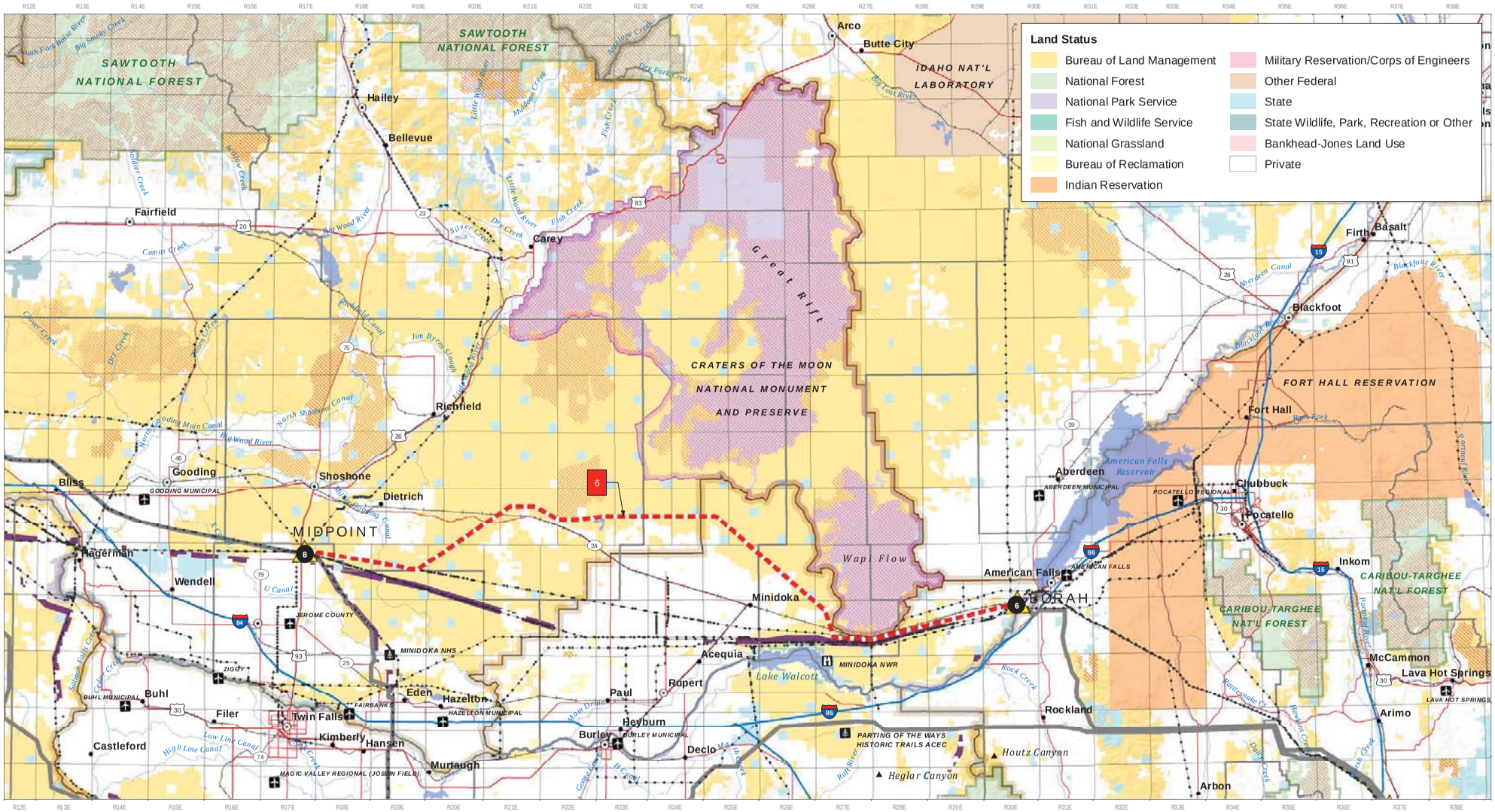

Sources | BLM; USFS; ESRI

SF299_POD FIG A-8 Segment 6_20120918 Saved | 9/18/2012

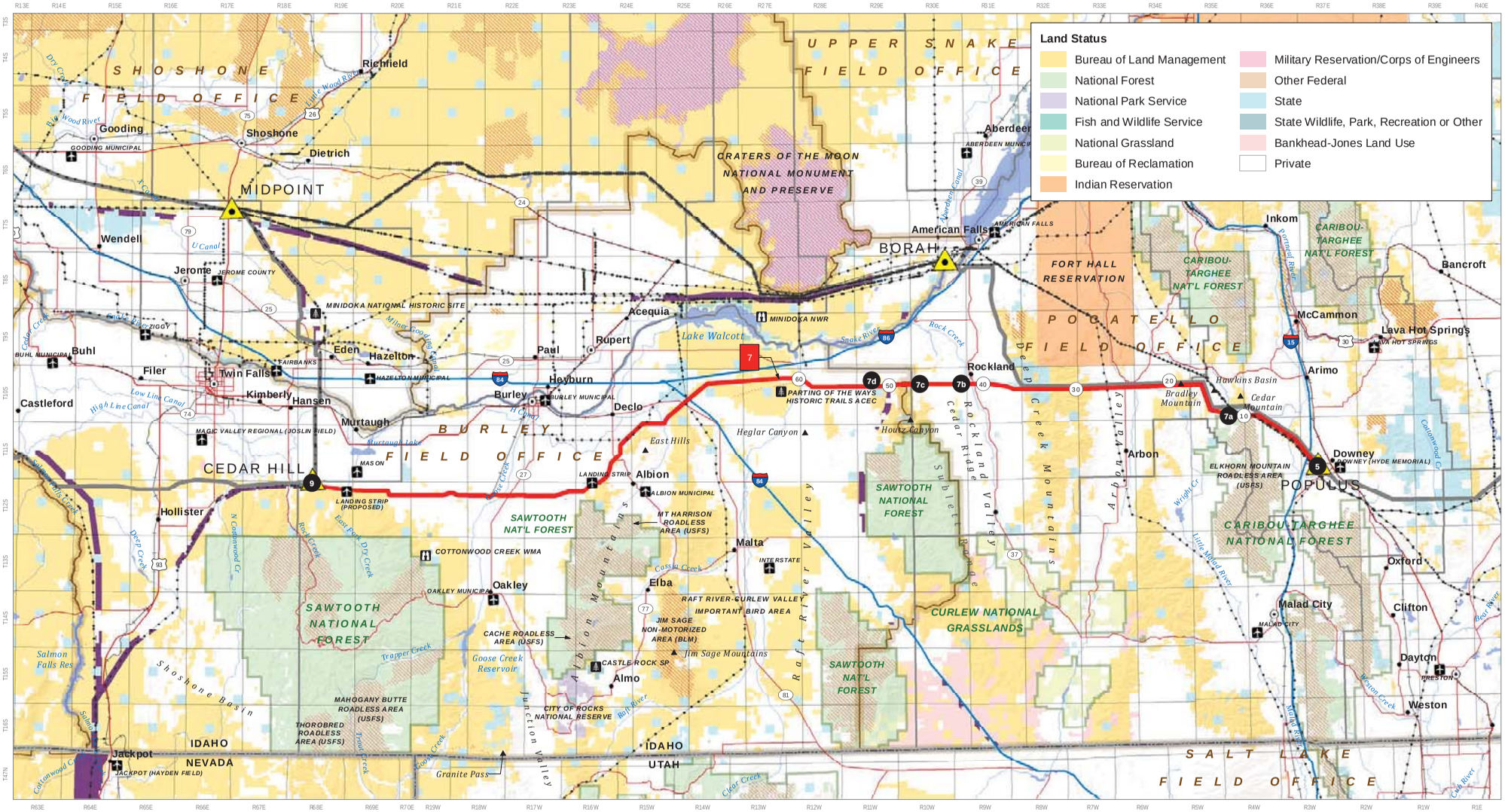

Enlarged Area Above

0 10
Miles
NAD 1983 UTM Zone 12N

Route Features
- Proposed Route
- Other Route

- Reference Point
- Mile
- Substation
- Existing Transmission Line (115kV greater)
- West Wide Energy Corridor (WWEC)

Other Features
- BLM Field Office
- National Forest
- County
- Restricted Access

- Railroad
- Interstate
- US Highway
- Secondary State or County Road

- Airport/Landing Strip
- Park/Recreation Area
- Wildlife Area
- Stream/River
- Waterbody

ROCKY MOUNTAIN POWER
IDAHO POWER

Gateway West
Transmission Line Project

Segment 7
Populus to Cedar Hill
Figure A-9

Sources | BLM; USFS; ESRI

SF299_POD FIG A-9 Segment 7_20120918 Saved | 9/18/2012

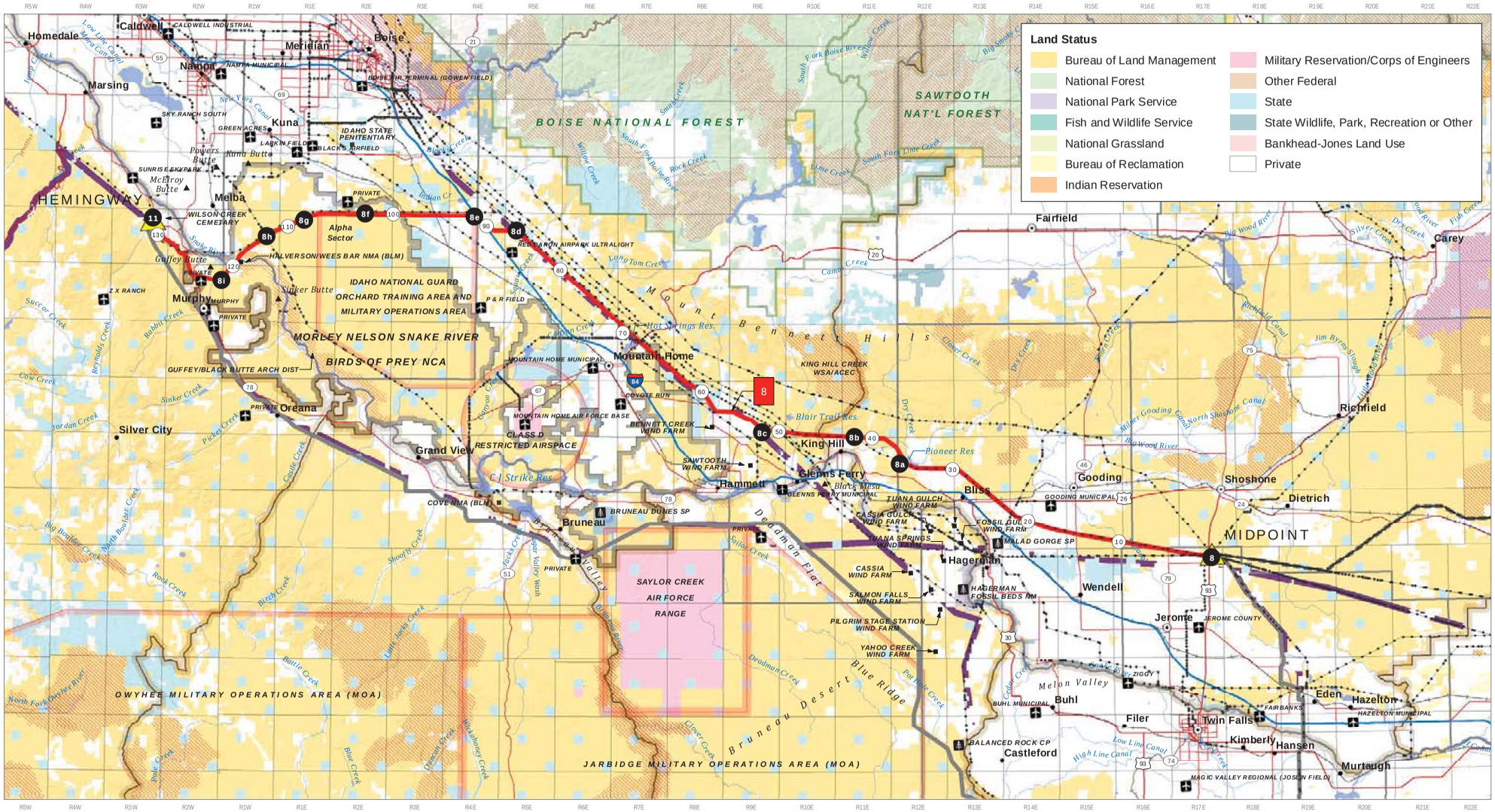

Enlarged Area Above

0 10 Miles

NAD 1983 UTM Zone 12N

Route Features
- Proposed Route
- Other Route

- Reference Point
- Mile
- Substation
- Existing Transmission Line (115kV greater)
- West Wide Energy Corridor (WWEC)

Other Features
- BLM Field Office
- National Forest
- County
- Restricted Access

- Railroad
- Interstate
- US Highway
- Secondary State or County Road

- Airport/Landing Strip
- Park/Recreation Area
- Wildlife Area
- Stream/River
- Waterbody

ROCKY MOUNTAIN POWER
IDAHO POWER

Gateway West
Transmission Line Project

Segment 8
Midpoint to Hemingway
Figure A-10

Sources | BLM; USFS; ESRI

SF299_POD FIG A-10 Segment 8_20120918 Saved | 9/18/2012

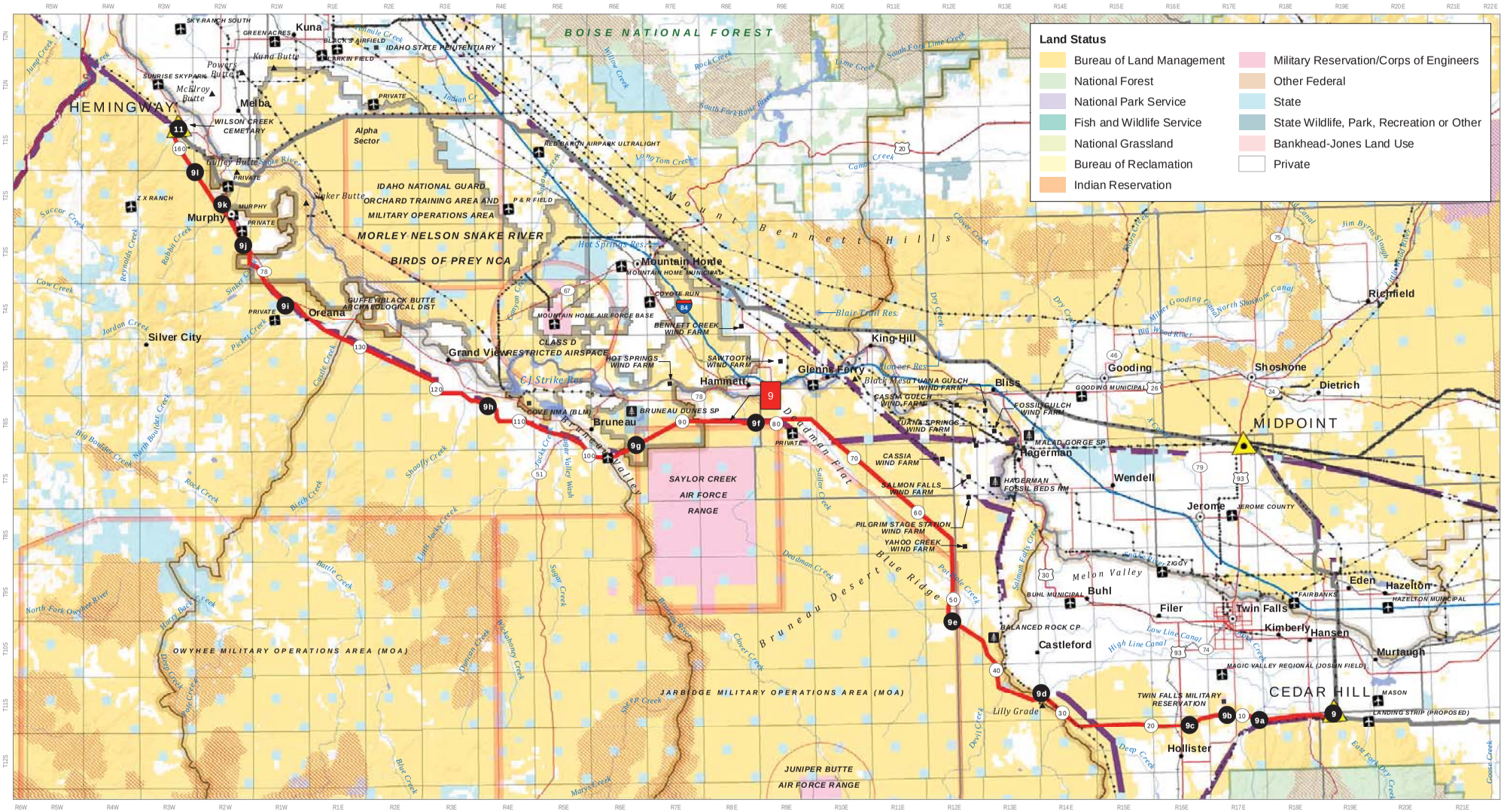

Enlarged Area Above

0 10 Miles

NAD 1983 UTM Zone 12N

Route Features
- Proposed Route
- Other Route

- Reference Point
- Mile
- Substation
- Existing Transmission Line (115kV greater)
- West Wide Energy Corridor (WWEC)

Other Features
- BLM Field Office
- National Forest
- County
- Restricted Access

- Railroad
- Interstate
- US Highway
- Secondary State or County Road

- Airport/Landing Strip
- Park/Recreation Area
- Wildlife Area
- Stream/River
- Waterbody

ROCKY MOUNTAIN POWER
IDAHO POWER

Gateway West
Transmission Line Project

Segment 9
Cedar Hill to Hemingway
Figure A-11

Sources | BLM; USFS; ESRI

SF299_POD FIG A-11 Segment 9_20120918 Saved | 9/18/2012

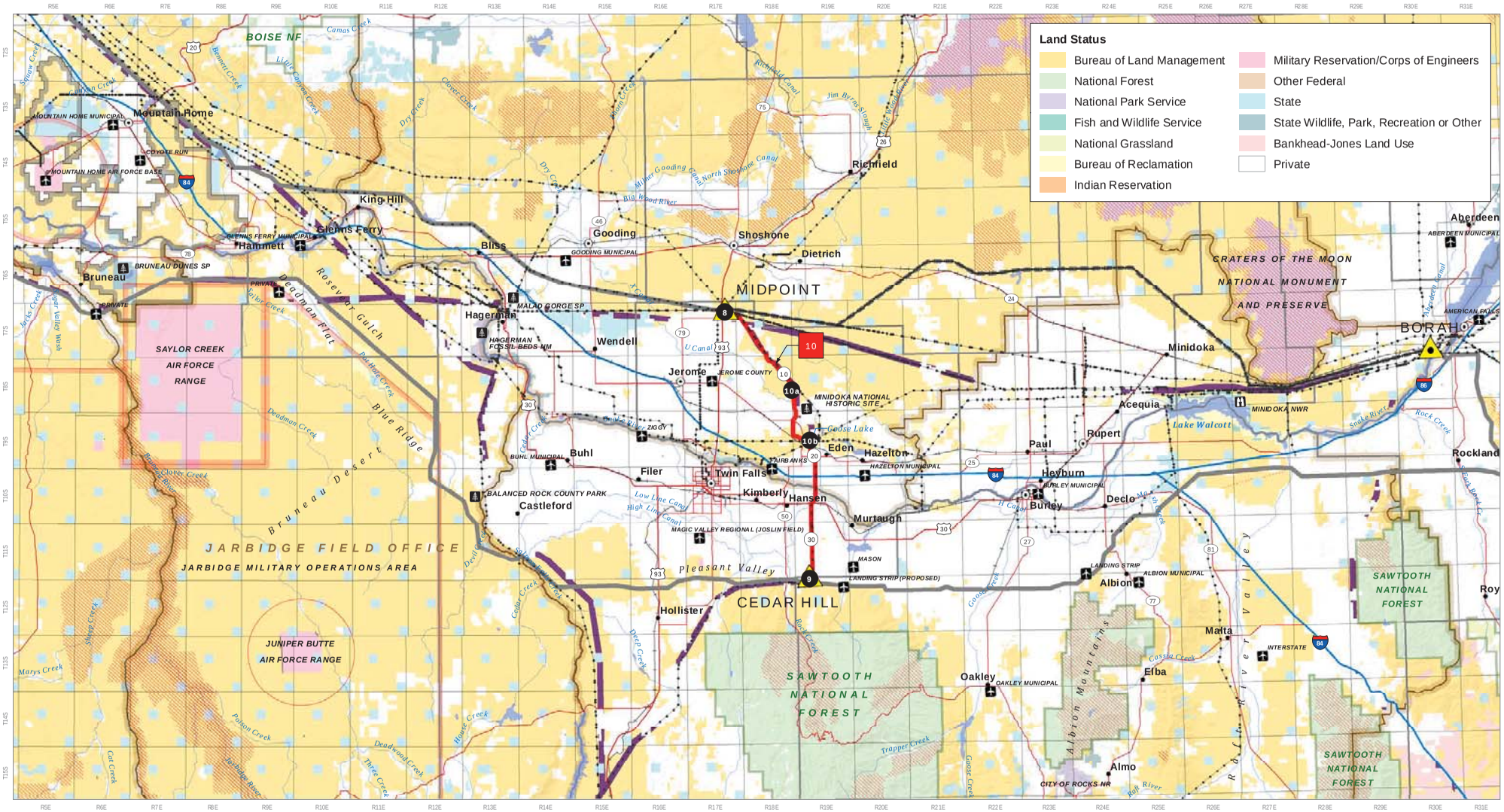
Land Status
Bureau of Land Management
National Forest
National Park Service
Fish and Wildlife Service
National Grassland
Bureau of Reclamation
Indian Reservation
Military Reservation/Corps of Engineers
Other Federal
State
State Wildlife, Park, Recreation or Other
Bankhead-Jones Land Use
Private
BOISE NF
Mountain Home
MOUNTAIN HOME MUNICIPAL
MOUNTAIN HOME AIR FORCE BASE
King Hill
Glenns Ferry
Hammett
Bliss
Gooding
GOODING MUNICIPAL
Shoshone
Dietrich
Richfield
Bruneau
BRUNEAU DUNES SP
Hagerman
HAGERMAN FOSSIL BEDS NM
MALAD GORGE SP
Wendell
Jerome
JEROME COUNTY
MIDPOINT
Minidoka
MINIDOKA NATIONAL HISTORIC SITE
MINIDOKA NWR
Acequia
Rupert
Paul
Heyburn
BURLEY MUNICIPAL
Burley
Declo
Hazelton
HAZELTON MUNICIPAL
Eden
Twin Falls
Kimberly
Hansen
Murtaugh
Filer
Buhl
BUHL MUNICIPAL
Castleford
BALANCED ROCK COUNTY PARK
MAGIC VALLEY REGIONAL (JOSLIN FIELD)
MASON
LANDING STRIP (PROPOSED)
CEDAR HILL
Hollister
Albion
ALBION MUNICIPAL
LANDING STRIP
Malta
Oakley
OAKLEY MUNICIPAL
Elba
Almo
CITY OF ROCKS NR
Aberdeen
ABERDEEN MUNICIPAL
AMERICAN FALLS
BORAH
Rockland
Roy
CRATERS OF THE MOON NATIONAL MONUMENT AND PRESERVE
SAYLOR CREEK AIR FORCE RANGE
JARBIDGE FIELD OFFICE
JARBIDGE MILITARY OPERATIONS AREA
JUNIPER BUTTE AIR FORCE RANGE
SAWTOOTH NATIONAL FOREST
Lake Walcott
Goose Lake
Pleasant Valley
Bruneau Desert
Blue Ridge
Deadman Flat
Roseberry Gulch
Albion Mountains
Raft River Valley
Snake River
Rock Creek
Big Wood River
Camas Creek
Clover Creek
Dry Creek
Malad River
Jim Byrns Slough
Milner Gooding Canal
North Shoshone Canal
Richfield Canal
U Canal
Low Line Canal
High Line Canal
H Canal
Deadwood Creek
Three Creek
Trapper Creek
Cassia Creek
Goose Creek
Deep Creek
Cedar Creek
Marys Creek
Poison Creek
Sheep Creek
Cat Creek
Jarbidge River
Raft River
Jacks Creek
Sugar Valley Wash
Bennett Creek
Little Camas Creek
Sylvan Creek
Mud Creek
Dry Creek
Deadhorse Creek
Deadman Creek
Bruneau River
Clover Creek
Salmon River
Sailor Creek
Cedar Creek
Deep Creek
Rock Creek
Mud Creek
Cassia Creek
Goose Creek
Trapper Creek
Big Wood River
Snake River
Rock Creek
Black Canyon Cr
Mud Creek
Raft

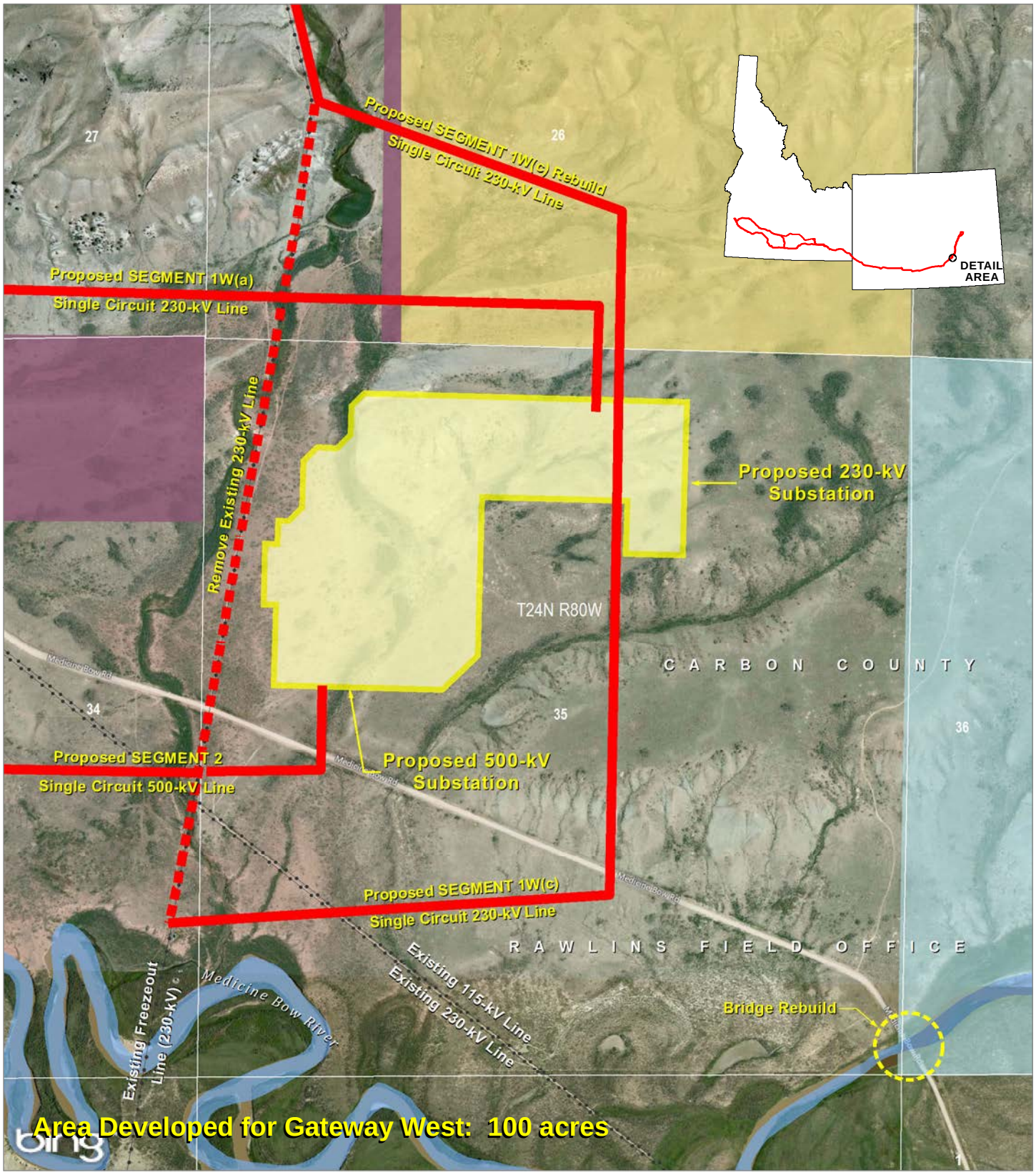

0 1,000
Feet

ROCKY MOUNTAIN POWER
A DIVISION OF PACIFICORP

IDAHO POWER
An IDACORP Company

PROJECT FEATURES
- Proposed Route
- Remove Existing Line
- Existing Transmission Line
- WWE Corridor

LAND OWNERSHIP
- Bureau of Land Management
- Private
- State

Gateway West
Transmission Line Project

Aeolus
230/500-kV Substation
Figure A-13

Last Saved: May 3, 2012
File: ...\UtilServ\Gateway_West\Reports\SF299_POD\SF299_POD_2012\Appendix_A\Substations\SF299_AppendixA_F13.mxd

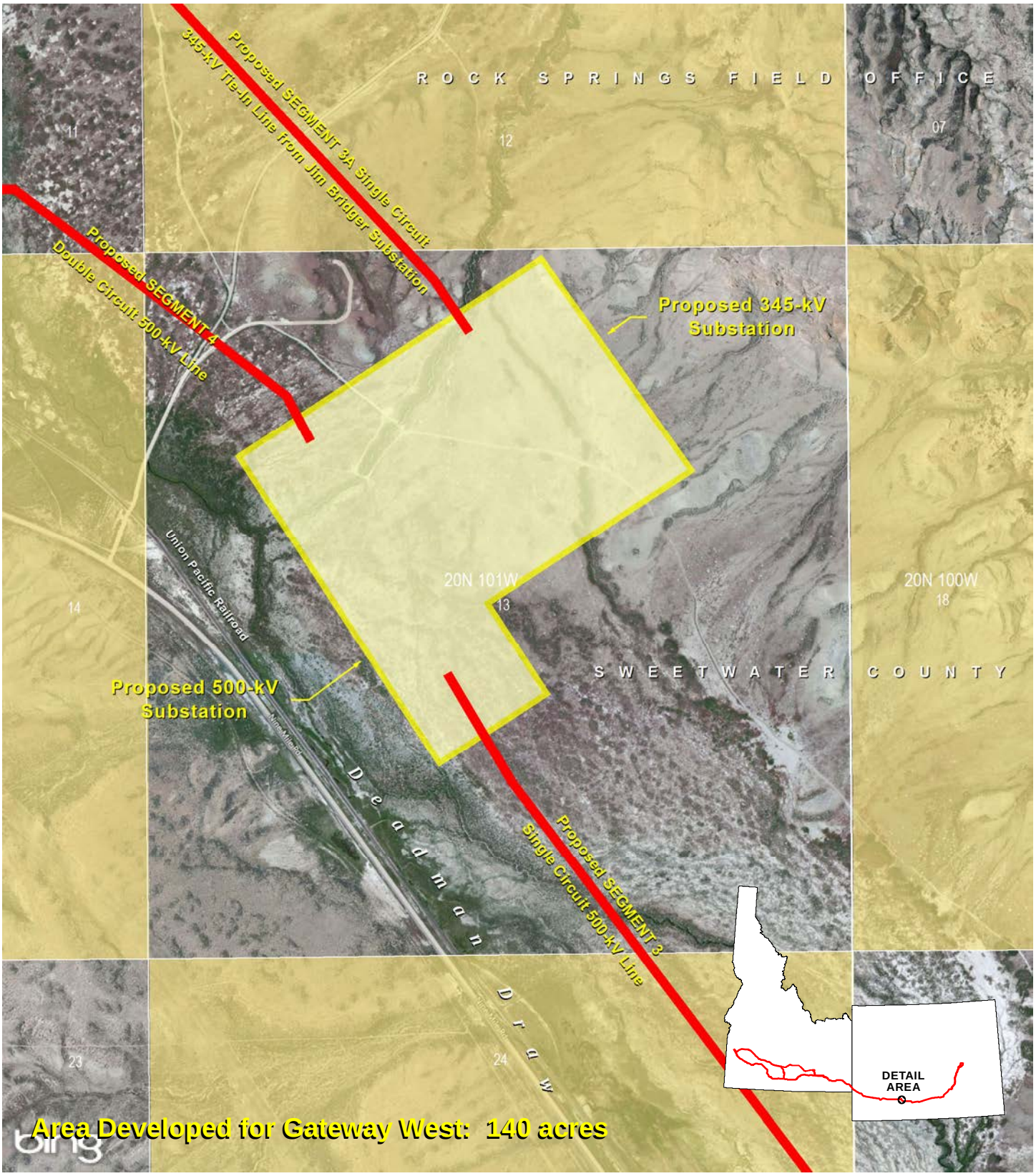

0 1,000
Feet

ROCKY MOUNTAIN POWER
A DIVISION OF PACIFICORP

IDAHO POWER
An IDACORP Company

PROJECT FEATURES
- Proposed Route
- Existing Transmission Line

LAND OWNERSHIP
- Bureau of Land Management
- Private

Gateway West
Transmission Line Project

Anticline
345/500-kV Substation
Figure A-14

Last Saved: May 3, 2012
File: ...\UtilServ\Gateway_West\Reports\SF299_POD\SF299_POD_2012\Appendix_A\Substations\SF299_AppendixA_F14.mxd

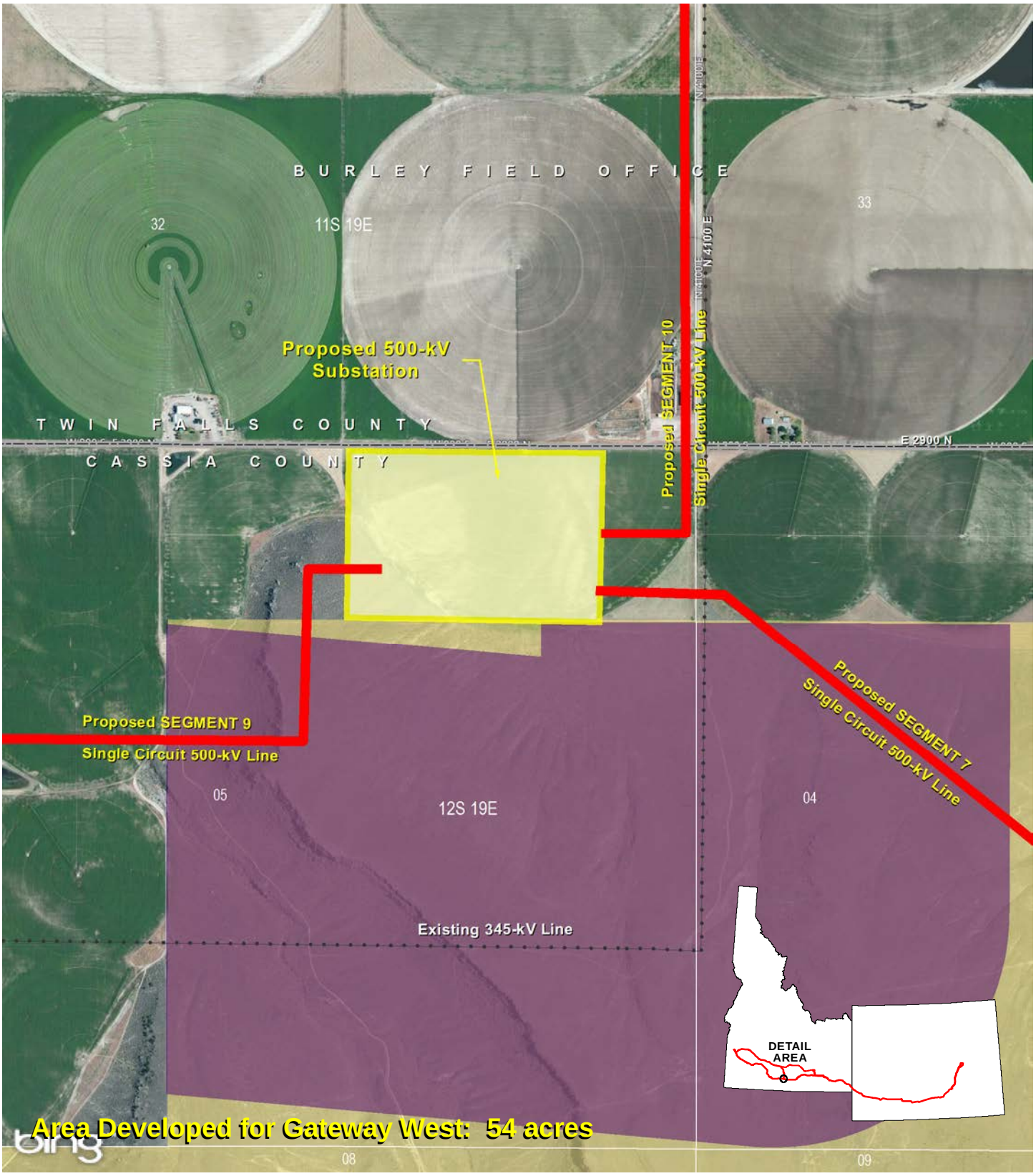

0 1,000
Feet

ROCKY MOUNTAIN POWER
A DIVISION OF PACIFICORP

IDAHO POWER
An IDACORP Company

PROJECT FEATURES
- Proposed Route
- Existing Transmission Line
- WWE Corridor

LAND OWNERSHIP
- Bureau of Land Management
- Private

Gateway West
Transmission Line Project

Cedar Hill
500-kV Substation
Figure A-15

Last Saved: May 3, 2012
File: ...\UtilServ\Gateway_West\Reports\SF299_POD\SF299_POD_2012\Appendix_A\Substations\SF299_AppendixA_F16.mxd

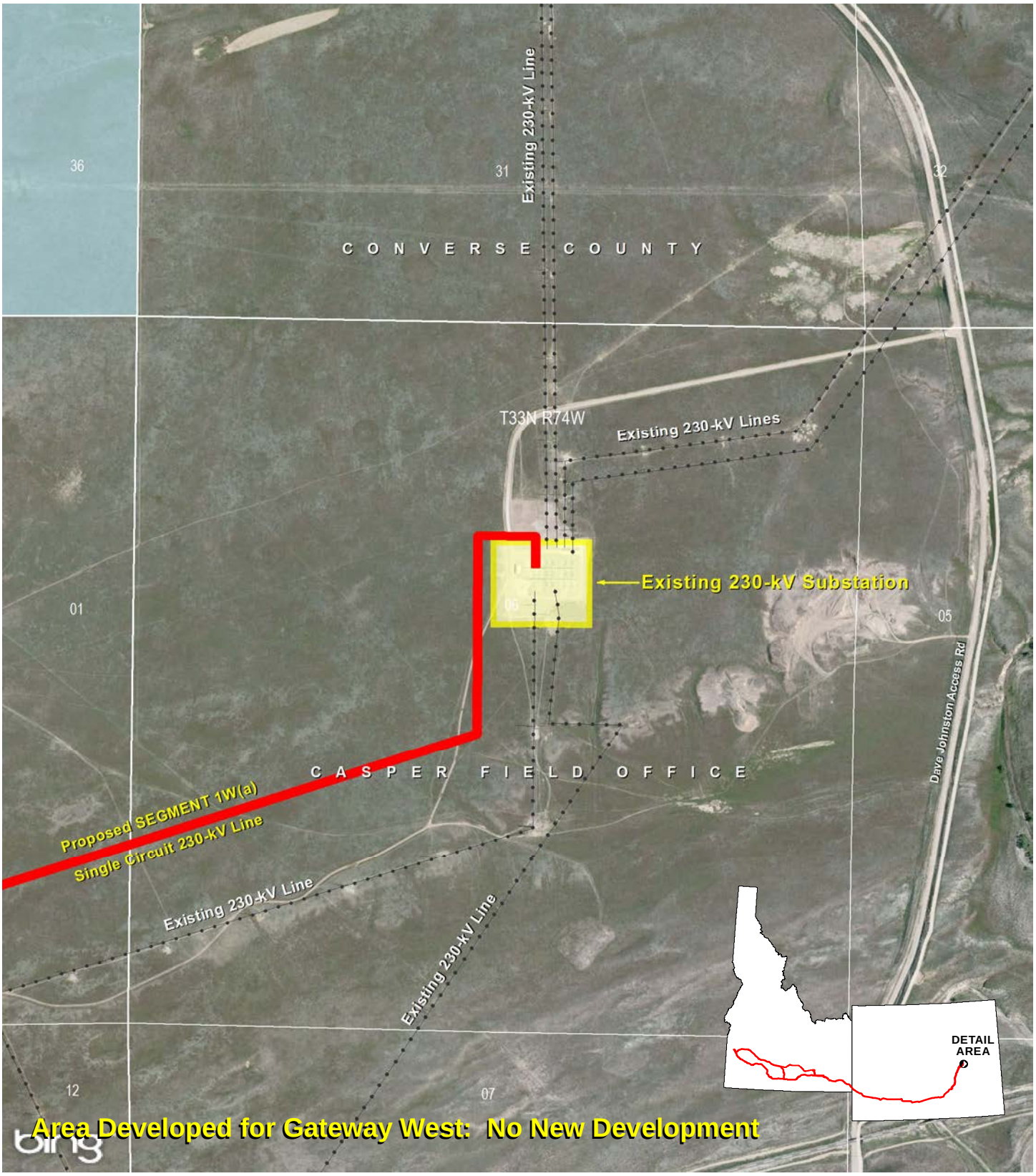

0 1,000
Feet

ROCKY MOUNTAIN POWER
A DIVISION OF PACIFICORP

IDAHO POWER.
An IDACORP Company

PROJECT FEATURES
- Proposed Route
- Existing Transmission Line

LAND OWNERSHIP
- Private
- State

Gateway West
Transmission Line Project

Windstar
230-kV Substation
Figure A-16

Last Saved: May 3, 2012
File: ...\UtilServ\Gateway_West\Reports\SF299_POD\SF299_POD_2012\Appendix_A\Substations\SF299_AppendixA_F16.mxd

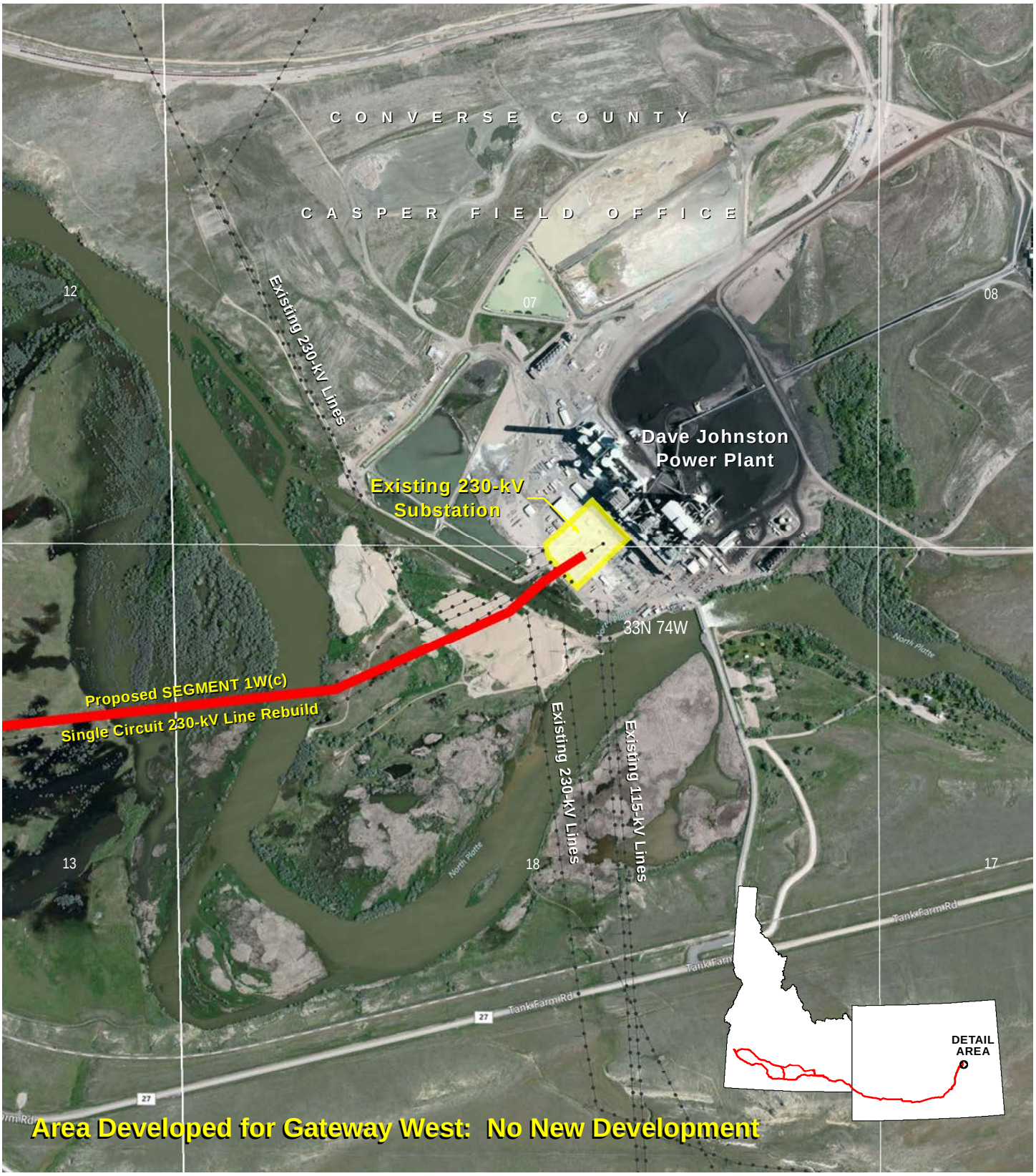

0 1,000
Feet

ROCKY MOUNTAIN POWER
A DIVISION OF PACIFICORP

IDAHO POWER.
An IDACORP Company

PROJECT FEATURES
- Proposed Route
- Existing Transmission Line

LAND OWNERSHIP
- Private

Gateway West
Transmission Line Project

Dave Johnston
230-kV Substation
Figure A-17

Last Saved: May 3, 2012
File: ...\UtilServ\Gateway_West\Reports\SF299_POD\SF299_POD_2012\Appendix_A\Substations\SF299_AppendixA_F17.mxd

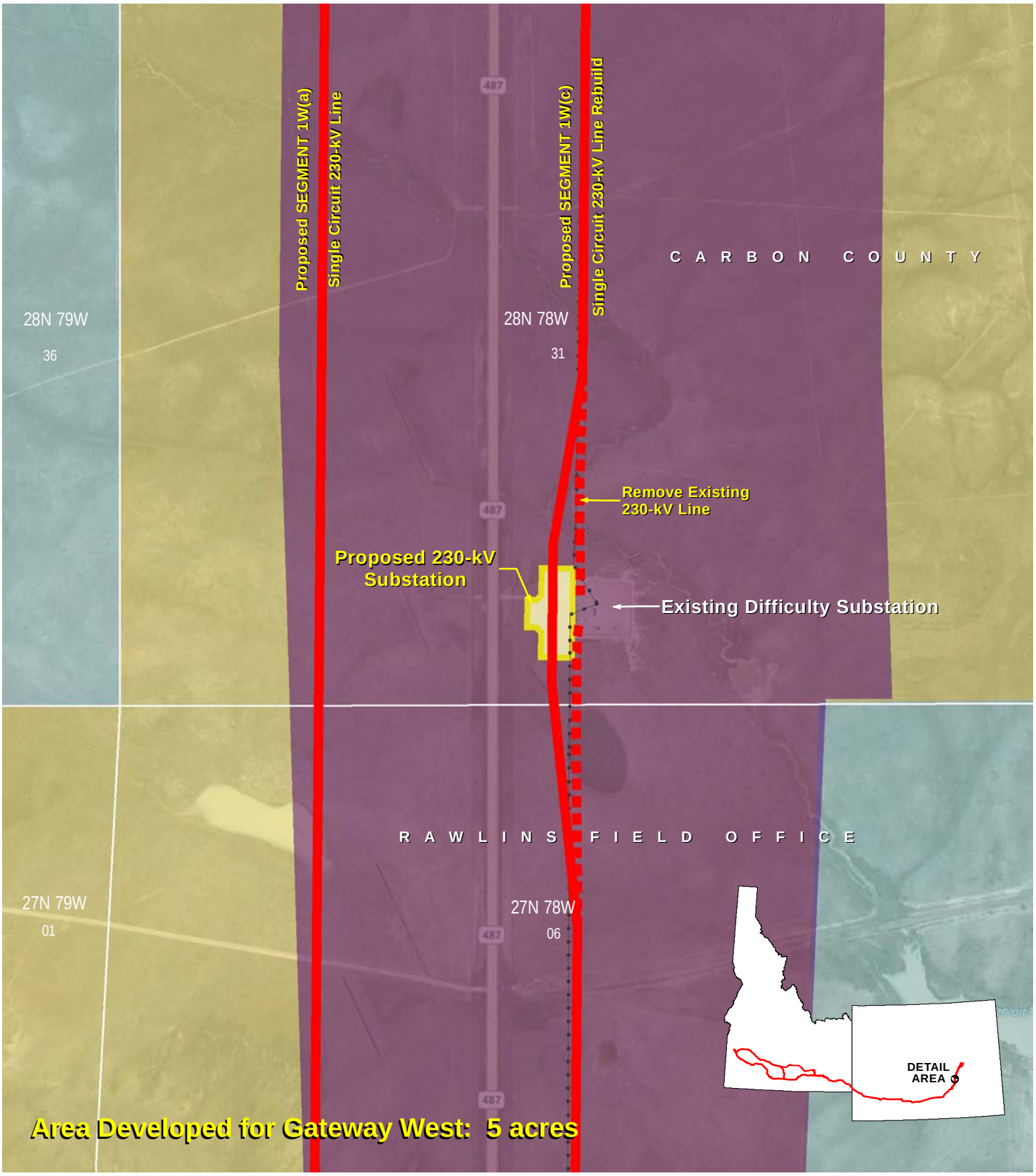

0 1,000
Feet

ROCKY MOUNTAIN POWER
A DIVISION OF PACIFICORP

IDAHO POWER
An IDACORP Company

PROJECT FEATURES

- Proposed Route
- Remove Existing Line
- Existing Transmission Line
- WWE Corridor

LAND OWNERSHIP

- Bureau of Land Management
- Private
- State

Gateway West
Transmission Line Project

Heward
230-kV Substation
Figure A-18

Last Saved: May 3, 2012
File: ...\UtilServ\Gateway_West\Reports\SF299_POD\SF299_POD_2012\Appendix_A\Substations\SF299_AppendixA_F18.mxd

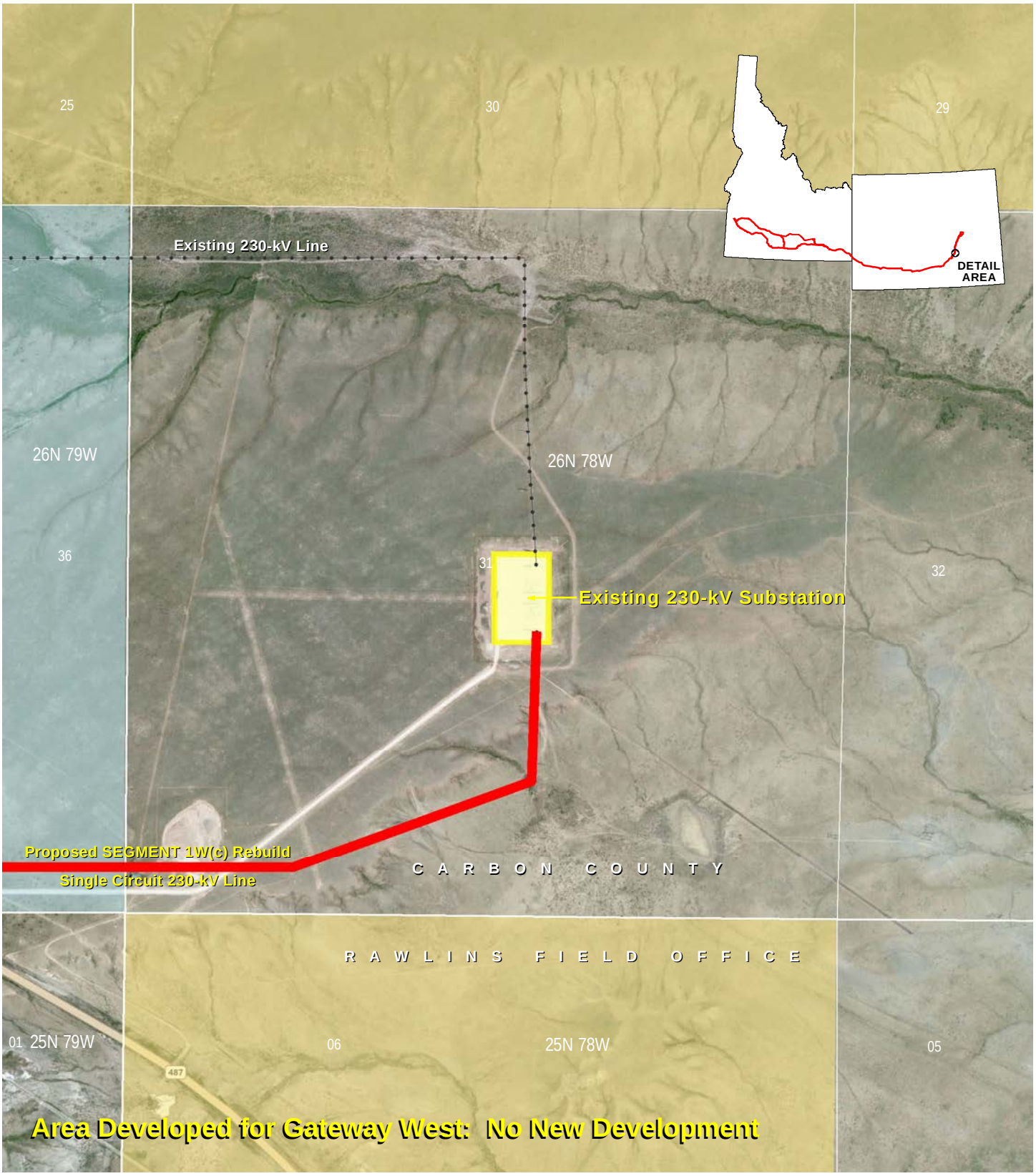

0 1,000
Feet

ROCKY MOUNTAIN POWER
A DIVISION OF PACIFICORP

IDAHO POWER
An IDACORP Company

PROJECT FEATURES
- Proposed Route
- Existing Transmission Line
- WWE Corridor

LAND OWNERSHIP
- Bureau of Land Management
- Private
- State

Gateway West
Transmission Line Project

Shirley Basin
230-kV Substation
Figure A-19

Last Saved: May 3, 2012
File: ...\UtilServ\Gateway_West\Reports\SF299_POD\SF299_POD_2012\Appendix_A\Substations\SF299_AppendixA_F19.mxd

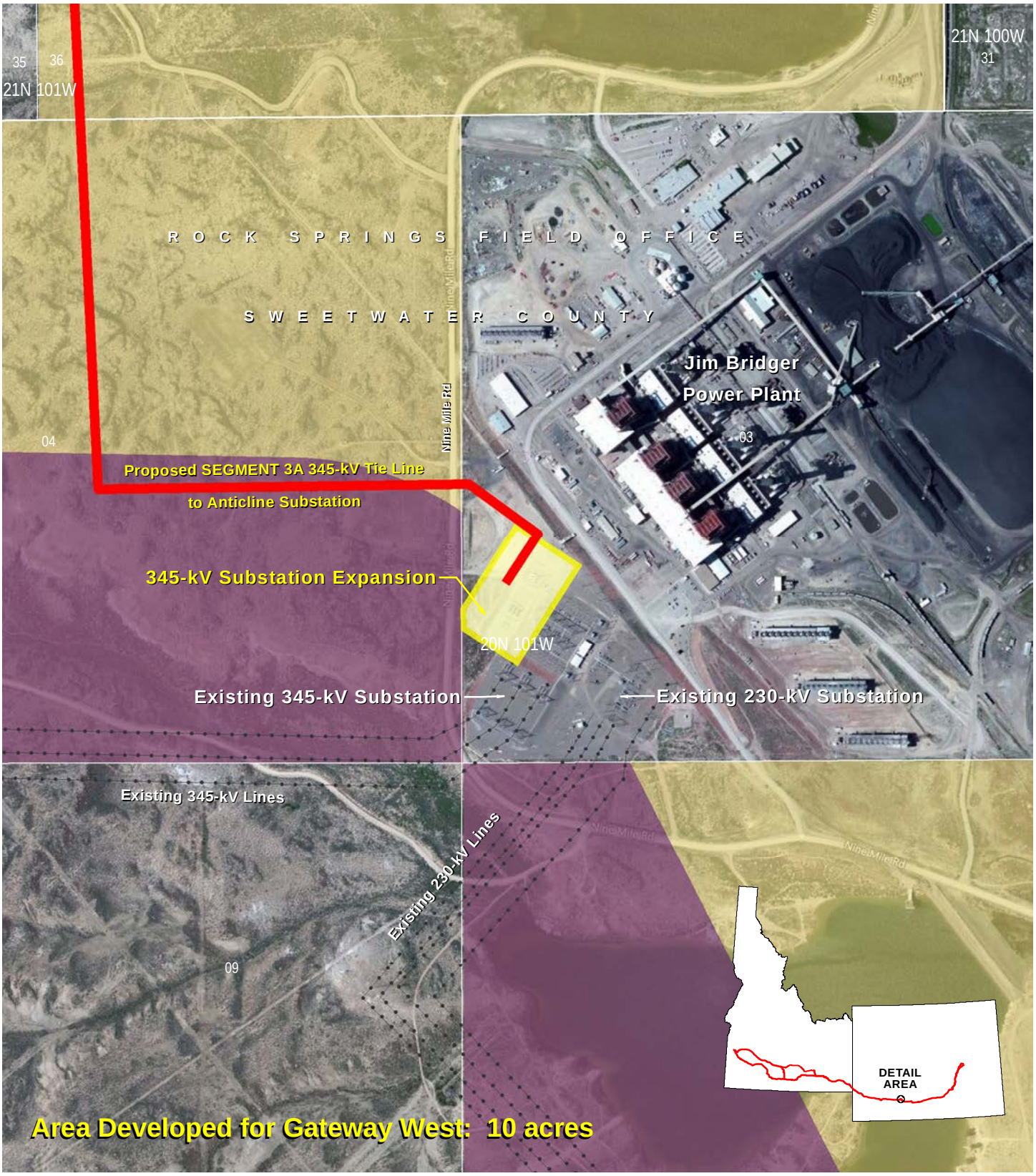

0 1,000
Feet

ROCKY MOUNTAIN POWER
A DIVISION OF PACIFICORP

IDAHO POWER.
An IDACORP Company

PROJECT FEATURES
- Proposed Route
- Existing Transmission Line
- WWE Corridor

LAND OWNERSHIP
- Bureau of Land Management
- Private

Gateway West
Transmission Line Project

Jim Bridger
345-kV Substation
Figure A-20

Last Saved: May 3, 2012
File: ...\UtilServ\Gateway_West\Reports\SF299_POD\SF299_POD_2012\Appendix_A\Substations\SF299_AppendixA_F20.mxd

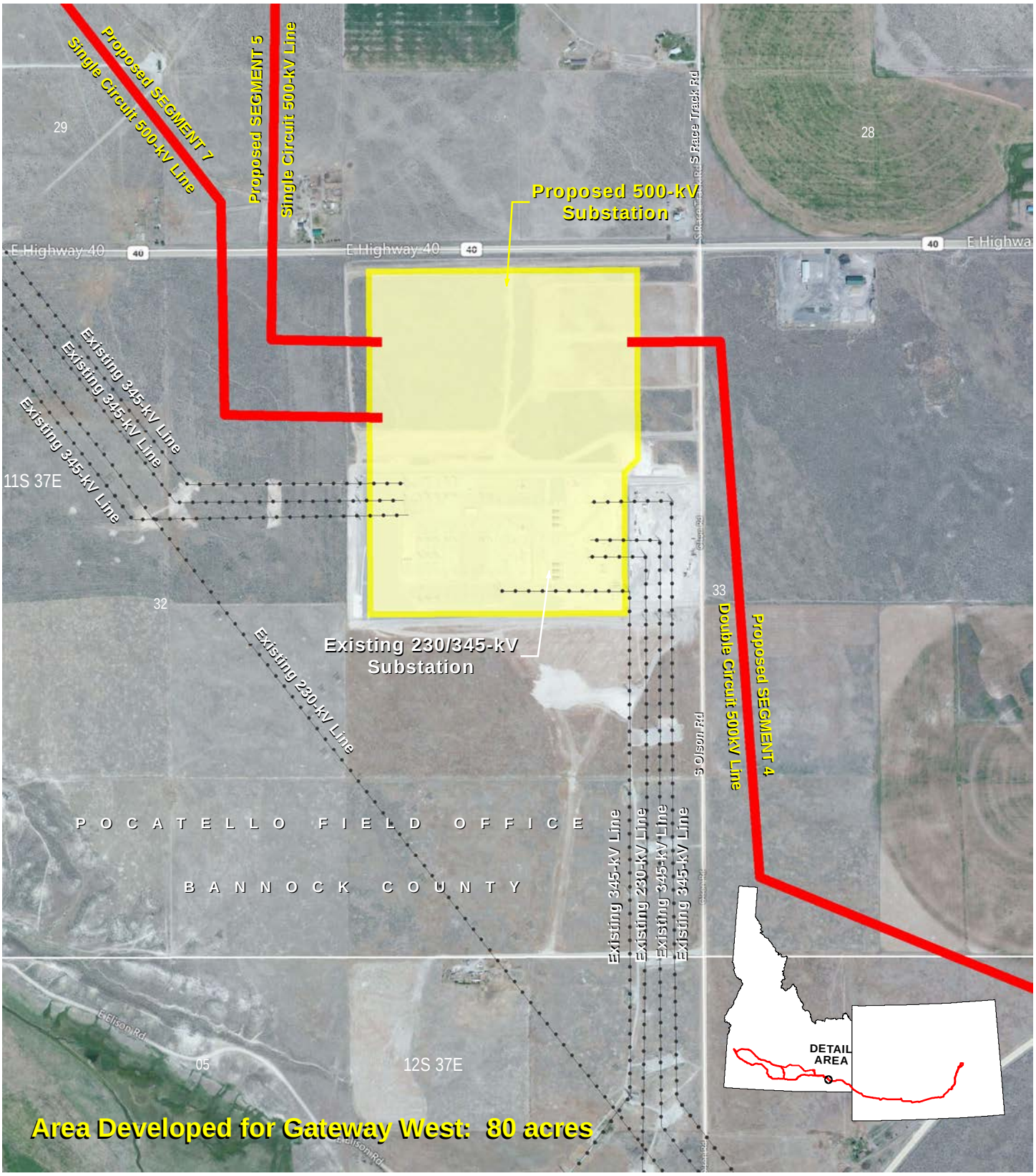

0 1,000
Feet

ROCKY MOUNTAIN POWER
A DIVISION OF PACIFICORP

IDAHO POWER.
An IDACORP Company

PROJECT FEATURES
- Proposed Route
- Existing Transmission Line

LAND OWNERSHIP
- Private

Gateway West
Transmission Line Project

Populus
500-kV Substation
Figure A-21

Last Saved: May 3, 2012
File: ...\UtilServ\Gateway_West\Reports\SF299_POD\SF299_POD_2012\Appendix_A\Substations\SF299_AppendixA_F21.mxd

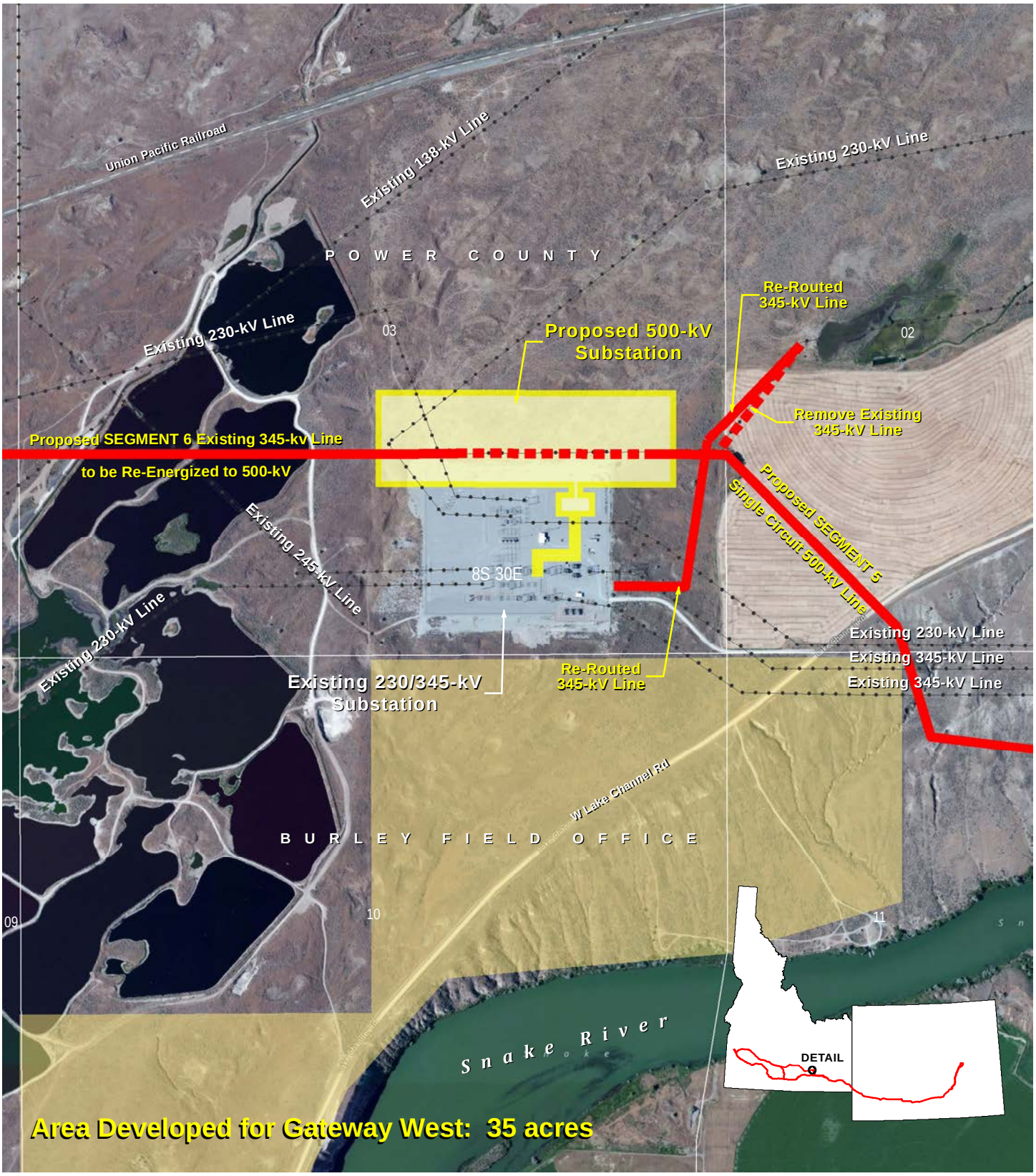

0 1,000
Feet

ROCKY MOUNTAIN POWER
A DIVISION OF PACIFICORP

IDAHO POWER.
An IDACORP Company

PROJECT FEATURES
- Proposed Route
- Remove Existing Line
- Existing Transmission Line

LAND OWNERSHIP
- Bureau of Land Management
- Private

Gateway West
Transmission Line Project

Borah
500-kV Substation
Figure A-22

Last Saved: May 3, 2012
File: ...\UtilServ\Gateway_West\Reports\SF299_POD\SF299_POD_2012\Appendix_A\Substations\SF299_AppendixA_F22.mxd

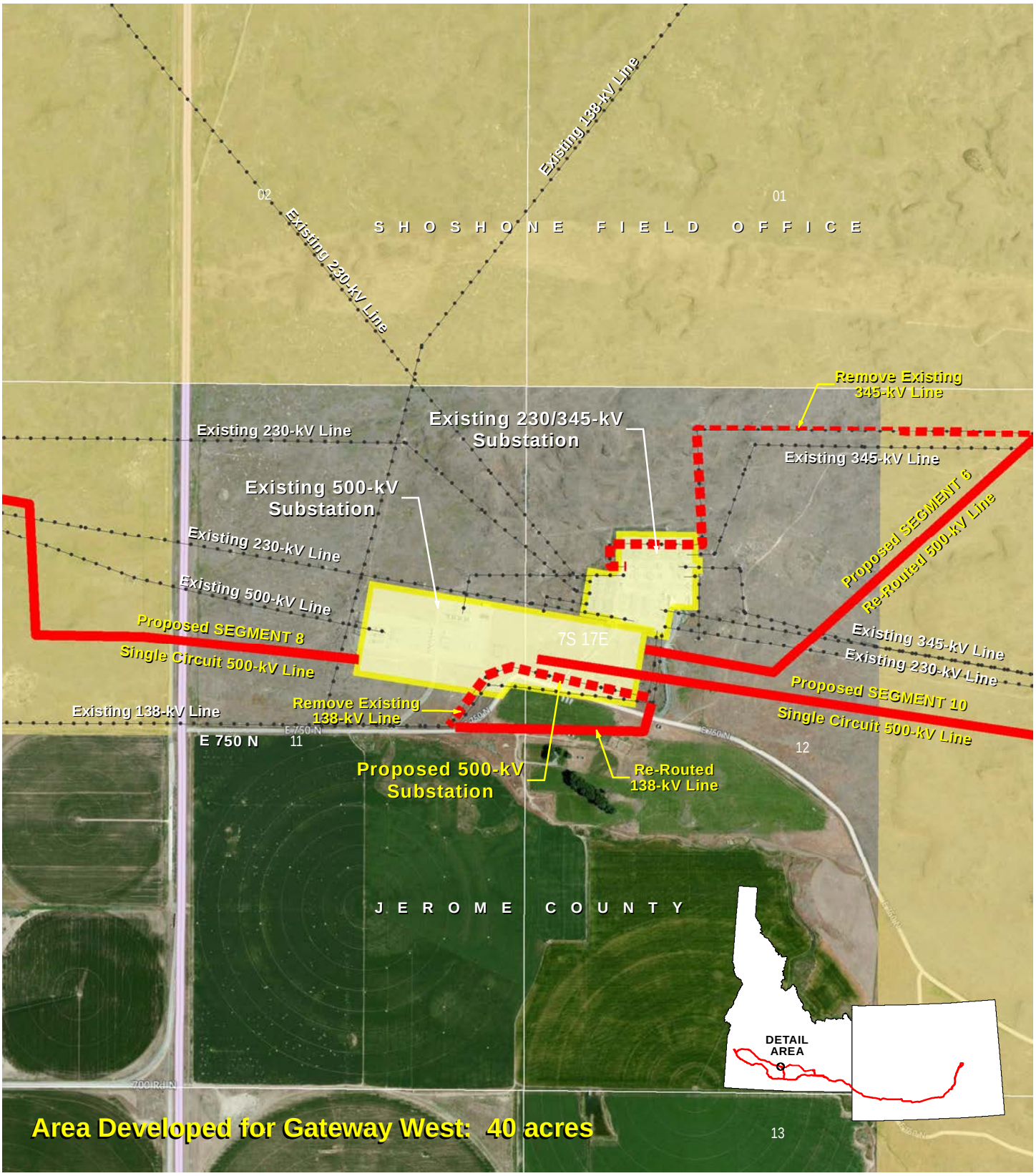

0 1,000
Feet

ROCKY MOUNTAIN POWER
A DIVISION OF PACIFICORP

IDAHO POWER
An IDACORP Company

PROJECT FEATURES
- Proposed Route
- Remove Existing Line
- Existing Transmission Line

LAND OWNERSHIP
- Bureau of Land Management
- Private

Gateway West
Transmission Line Project

Midpoint
500-kV Substation
Figure A-23

Last Saved: May 3, 2012
File: ...\UtilServ\Gateway_West\Reports\SF299_POD\SF299_POD_2012\Appendix_A\Substations\SF299_AppendixA_F23.mxd

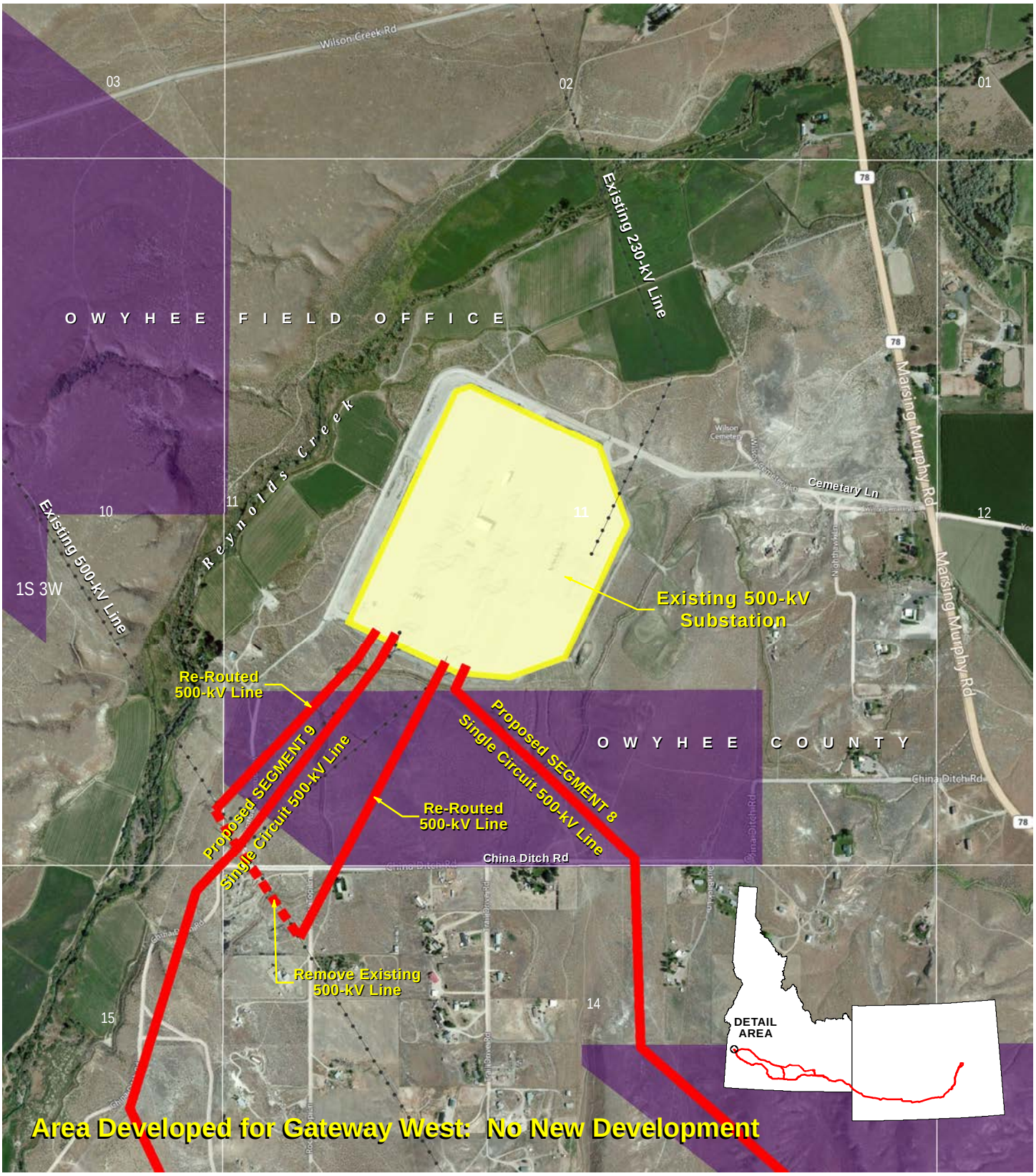

0 1,000
Feet

ROCKY MOUNTAIN POWER
A DIVISION OF PACIFICORP

IDAHO POWER.
An IDACORP Company

PROJECT FEATURES
- Proposed Route
- Remove Existing Line
- Existing Transmission Line
- WWE Corridor

LAND OWNERSHIP
- Bureau of Land Management
- Private

Gateway West
Transmission Line Project

Hemingway
500-kV Substation
Figure A-24

Last Saved: May 3, 2012
File: ...\UtilServ\Gateway_West\Reports\SF299_POD\SF299_POD_2012\Appendix_A\Substations\SF299_AppendixA_F24.mxd

APPENDIX B
TRANSMISSION LINE AND SUBSTATION COMPONENTS

Appendix B

Transmission Line and Substation Components

Gateway West Transmission Line Project

Prepared by:

PacifiCorp
1407 W North Temple
Salt Lake City, UT 84116

and

Idaho Power Company
1221 West Idaho Street
Boise, ID 83702

January 2013

TABLE OF CONTENTS

1.0 INTRODUCTION B-1
2.0 SYSTEM COMPONENTS B-1
2.1 Transmission Structures B-1
2.1.1 Types of Transmission Line Support Structures B-1
2.1.2 Structure and Conductor Clearances B-10
2.1.3 Structure Foundations B-10
2.2 Conductors B-11
2.3 Other Hardware B-12
2.3.1 Insulators B-12
2.3.2 Grounding Systems B-12
2.3.3 Minor Additional Hardware B-14
2.4 Communication Systems B-14
2.4.1 Optical Ground Wire B-14
2.4.2 Regeneration Stations B-15
2.5 Roads Used During Construction and Operation B-16
2.5.1 Construction Access Roads B-17
2.5.2 Operations Access Roads B-23
2.5.3 Waterbody Crossings with Access Roads B-23
2.5.4 Wetlands Crossings with Access Roads B-27
2.6 Substations B-28
2.6.1 Substation Components B-28
2.6.2 Distribution Supply Lines B-30
3.0 SYSTEM CONSTRUCTION B-31
3.1 Land Requirements and Disturbance B-31
3.1.1 Right-of-Way Width B-31
3.1.2 Right-of-Way Acquisition B-31
3.1.3 Land Disturbance B-35
3.2 Transmission Line Removal (Segment 1W(c) only) B-35
3.2.1 Access for Removal B-35
3.2.2 Site Preparation B-35
3.2.3 Remove Conductors B-39
3.2.4 Remove Structures B-39
3.2.5 Site Reclamation B-39
3.3 Transmission Line Construction B-39
3.3.1 Transmission Line System Roads B-40
3.3.2 Soil Borings B-42
3.3.3 Multi-Purpose Yards B-42
3.3.4 Fly Yards B-43
3.3.5 Site Preparation B-44
3.3.6 Install Structure Foundations B-45
3.3.7 Erect Support Structures B-46
3.3.8 String Conductors, Shield Wire, and Fiber Optic Ground Wire B-47
3.3.9 Cleanup and Site Reclamation B-49

3.4 Communication System B-49
3.4.1 Regeneration Stations B-49
3.4.2 Access Road B-49
3.5 Substation Construction B-49
3.5.1 Substation Roads B-50
3.5.2 Soil Boring B-50
3.5.3 Clearing and Grading B-50
3.5.4 Multi-Purpose Yards B-50
3.5.5 Grounding B-50
3.5.6 Fencing B-51
3.5.7 Foundation Installation B-51
3.5.8 Oil Containment B-51
3.5.9 Structure and Equipment Installation B-52
3.5.10 Control Building Construction B-52
3.5.11 Conductor Installation B-52
3.5.12 Conduit and Control Cable Installation B-52
3.5.13 Construction Cleanup and Landscaping B-52
3.6 Special Construction Techniques B-53
3.6.1 Blasting B-53
3.6.2 Helicopter Use B-54
3.6.3 Water Use B-55
3.7 Construction Elements B-57
3.7.1 Construction Workforce B-57
3.7.2 Construction Equipment and Traffic B-58
3.7.3 Removal of Facilities and Waste Disposal B-66
3.7.4 Construction Schedule B-68
4.0 SYSTEM OPERATIONS AND MAINTENANCE B-70
4.1 Routine System Operation and Maintenance B-71
4.1.1 Routine System Inspection, Maintenance, and Repair B-72
4.1.2 Transmission Line Maintenance B-72
4.1.3 Hardware Maintenance and Repairs B-72
4.1.4 Access Road and Work Area Repair B-73
4.1.5 Vegetation Management B-73
4.1.6 Substation and Regeneration Station Maintenance B-79
4.2 Emergency Response B-79
4.2.1 Fire Protection B-80
5.0 DECOMMISSIONING B-80

LIST OF TABLES

Table B-1. Proposed Structure Configuration B-9
Table B-2. Foundation Excavation Dimensions B-10
Table B-3. Proposed Regeneration Station Locations B-15
Table B-4. Typical Road Requirements for Transmission Line System B-17
Table B-5. Access Road Wetland Crossings in the Bear River Plain B-28
Table B-6. Summary of Land Required for Construction and Operations B-32
Table B-7. Summary of Land Disturbance Resulting from Construction and Operations B-36
Table B-8. Slope Class and Estimated Average Road Width B-41
Table B-9. Miles of New and Improved Access Roads[1/] B-42
Table B-10. Construction Multi-purpose Yards and Helicopter Fly Yards B-44
Table B-11. Estimated Disturbance from Structure Pads by Slope Class B-44
Table B-12. Summary of Shallow Bedrock by Segment B-53
Table B-13. Estimated Water Usage by Component, Segment, and Activity B-56
Table B-14. Transmission Line Construction Equipment Requirements – Segments 1–4 ..... B-59
Table B-15. Transmission Line Construction Equipment Requirements – Segments 5-10 ..... B-60
Table B-16. Substation Equipment Requirements – Segments 1–4 ..... B-61
Table B-17. Substation Equipment Requirements – Segments 5–10 ..... B-62
Table B-18. Average and Peak Construction Traffic B-63
Table B-19. Solid Waste Generation from Construction Activities B-67
Table B-20. Construction Schedule B-69

LIST OF FIGURES

Figure B-1. Proposed Tangent Single-Circuit 230-kV H-Frame Structure B-3
Figure B-2. Proposed Tangent Single-Circuit 345-kV H-Frame Structure B-4
Figure B-3. Proposed Tangent Single-Circuit 500-kV Lattice Steel Structure B-5
Figure B-4. Proposed 500-kV and 345-kV Single-Circuit ROW Configurations..... B-6
Figure B-5. Proposed 230-kV Single-Circuit ROW Configurations B-7
Figure B-6. Single-Circuit 500-kV Guyed "Delta" and "V" Structure Types Considered but not Carried Forward B-7
Figure B-7. 500-kV Monopole Structure Type Considered but not Carried Forward B-8
Figure B-8. Typical Regeneration Station Site..... B-16
Figure B-9a. Typical Road Section for Different Terrains B-19
Figure B-9b. Water Bars and Dips (TA 503, 1 of 3 pages) B-20
Figure B-10. Access Road Dry Crossings B-25
Figure B-11. Access Road Wet Crossings..... B-26
Figure B-12. Typical 500-kV Substation B-29
Figure B-13. Transmission Line Construction Sequence..... B-40
Figure B-14. Conductor Installation B-47
Figure B-15. Total Projected Labor Force by EPC Analysis Area and Week B-58
Figure B-16. Live-line Maintenance Space Requirements, 230 kV B-74
Figure B-17. Live-line Maintenance Space Requirements, 345 kV B-75
Figure B-18. Live-line Maintenance Space Requirements, Single-Circuit 500 kV B-76
Figure B-19. Right-of-Way Vegetation Management..... B-77
Figure B-20. Right-of-Way Vegetation Management in Steep Terrain B-78

1.0 INTRODUCTION

Rocky Mountain Power and Idaho Power Company (Companies) are proposing to construct and operate approximately 990 miles of new 230-kilovolt (kV), 345-kV, and 500-kV alternating current electric transmission system consisting of 10 segments between the Windstar Substation at Glenrock, Wyoming, and the Hemingway Substation approximately 30 miles southwest of Boise, Idaho. The proposed transmission line is needed to supplement existing transmission lines in order to relieve operating limitations, increase capacity, and improve reliability in the existing electric transmission grid, allowing for the delivery of up to 1,500 megawatts (MW) of additional energy for the Companies' larger service areas and to other interconnected systems. The Project includes ground disturbing activities associated with the construction of above-ground, single-circuit transmission lines involving structures, access roads, multi-purpose yards, fly yards, pulling sites as well as associated substations, communication sites, and electrical supply distribution lines. The Project crosses private land and public lands administered by the Bureau of Land Management (BLM), U.S. Forest Service (USFS), other federal agencies, and the states of Idaho and Wyoming.

This appendix contains detailed information regarding the components of the transmission system evaluated in the Environmental Impact Statement (EIS), including the transmission structures, the communications system, and the substations. This appendix includes component descriptions (Section 1.0), provides details regarding construction of the system (Section 2.0), goes on to provide information regarding the operations and maintenance of the system (Section 3.0), and finally details the proposed abandonment and restoration techniques (Section 4.0).

2.0 SYSTEM COMPONENTS

This section describes the various components of the transmission system for the Gateway West Project, including the structures themselves, the conductors used, other hardware needed, the communication system, the access roads, and finally the substations. Both the proposed and alternative structures are described here, and details are provided to support the discussion of transmission structure alternatives found in Section 2.7 of Chapter 2 of the EIS.

2.1 Transmission Structures

2.1.1 Types of Transmission Line Support Structures

The proposed transmission line circuits typically will be supported by three types of structures: steel H-frame 230-kV and 345-kV structures and self-supporting single-circuit 500-kV lattice steel towers[1]. Figures B-1 through B-3 illustrate the typical tangent structure configurations, which will be the predominant types used for the Project. Tangent structures are designed to support the conductors where the line angle at the

[1] A 5.1-mile interconnecting 345-kV transmission line (Segment 3A) will be constructed between the proposed Anticline Substation yard and the existing Jim Bridger Substation 345-kV yard to electrically connect the two substations.

structure location is typically one degree or less, meaning the transmission line is essentially a straight line. Figures B-4 and B-5 illustrate the proposed and alternative ROW design configurations.

In addition to the more typical tangent structure configurations, specialized structures are designed where the line must turn an angle. Each structure type is individually designed, depending on the line angle and the underlying soil and rock conditions, to withstand the pull of the wires in different directions. Angle structures are heavier and have deeper foundations. 230-kV angle structures are guyed.

Figures B-6 and B-7 illustrate guyed and monopole structures considered during preliminary Project design but not carried forward as proposed by the Companies.

230-kV Steel H-Frame Structures

The proposed 230-kV single-circuit line between the Windstar and Aeolus Substations (Segments 1W[a]) uses steel H-frame structures (Figure B-1). The structures that will be replaced when reconstructing the existing 230-kV line between the Dave Johnston and Aeolus Substations (Segment 1W[c]) will also use steel H-frame structures.

The 230-kV steel H-frames use either dulled galvanized or self-weathering steel. Weathering steel is manufactured from a group of steel alloys that were developed to eliminate the need for painting or other protective finish. This type of steel alloy forms a stable rust-like appearance if exposed to the weather for several years. The average distance between H-frame structures is approximately 800 feet. Structure heights vary depending on terrain and the requirement to maintain minimum conductor clearances from ground. Typically, the 230-kV single-circuit H-frame structures have pole lengths ranging between 70 and 100 feet. Embedment depths are typically 10 percent of the pole length plus 2 feet, which in the case of this Project is expected to range between 9 and 12 feet. The typical structure heights above ground vary from 60 to 90 feet.

345-kV Steel H-Frame Structures

The proposed 345-kV single-circuit line between the Anticline and Jim Bridger 345-kV Substations (Segment 3A) uses steel H-frame structures (Figure B-2). The 345-kV steel H-frames use either dulled galvanized or self-weathering steel, similar to the 230-kV structures. The average distance between H-frame structures is approximately 800 feet. Structure heights vary depending on terrain and the requirement to maintain minimum conductor clearances from ground. Typically, the 345-kV single-circuit H-frame structures have pole lengths ranging between 95 and 125 feet. Embedment depths are typically 10 percent of the pole length plus 5 feet, which for 345-kV structures will range between 14 and 18 feet. The structure heights above ground vary from 80 to 110 feet. Depending on underlying soil and rock conditions, the 345-kV H-frames may be supported by steel-reinforced concrete drilled piers.

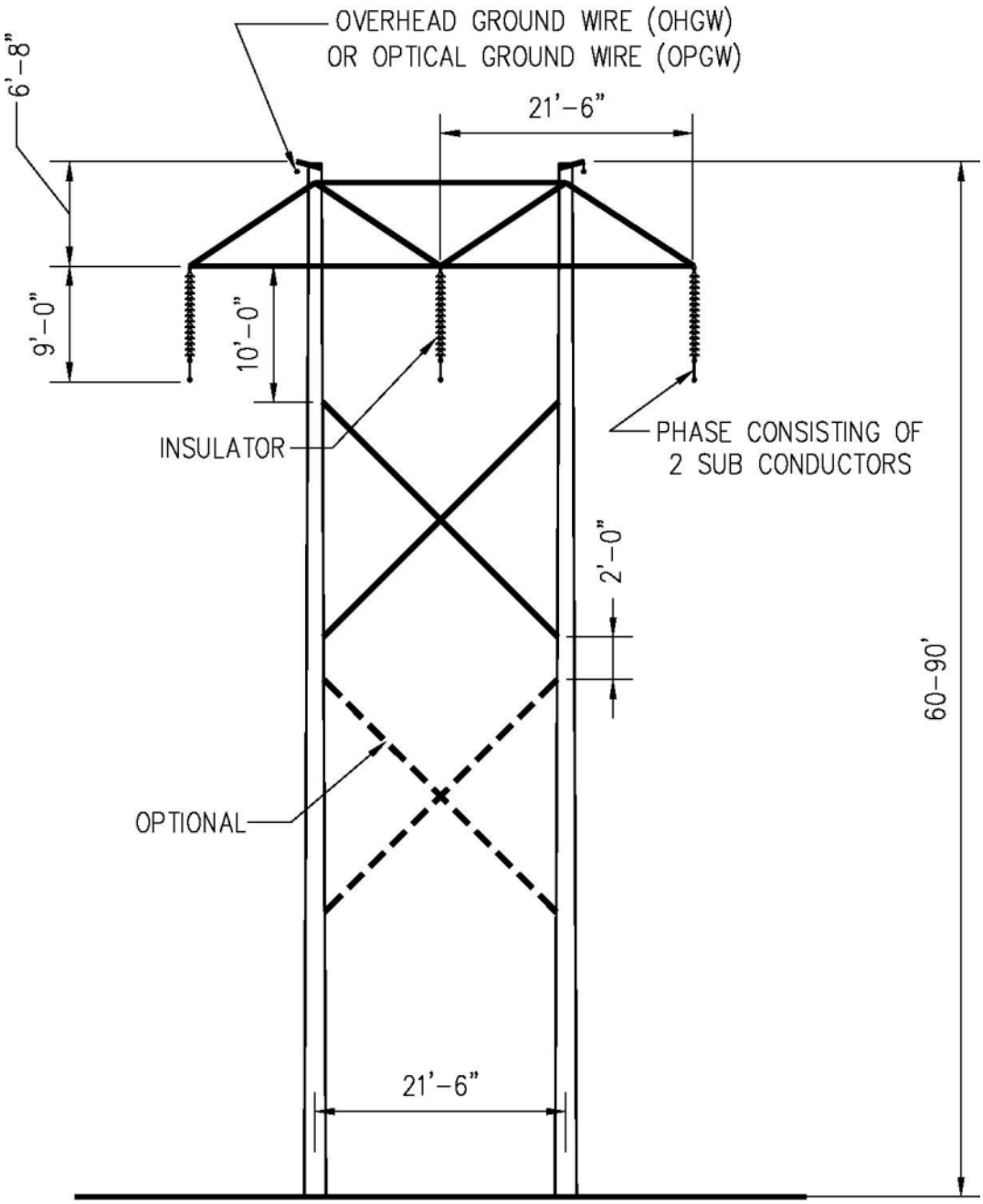

Figure B-1. Proposed Tangent Single-Circuit 230-kV H-Frame Structure

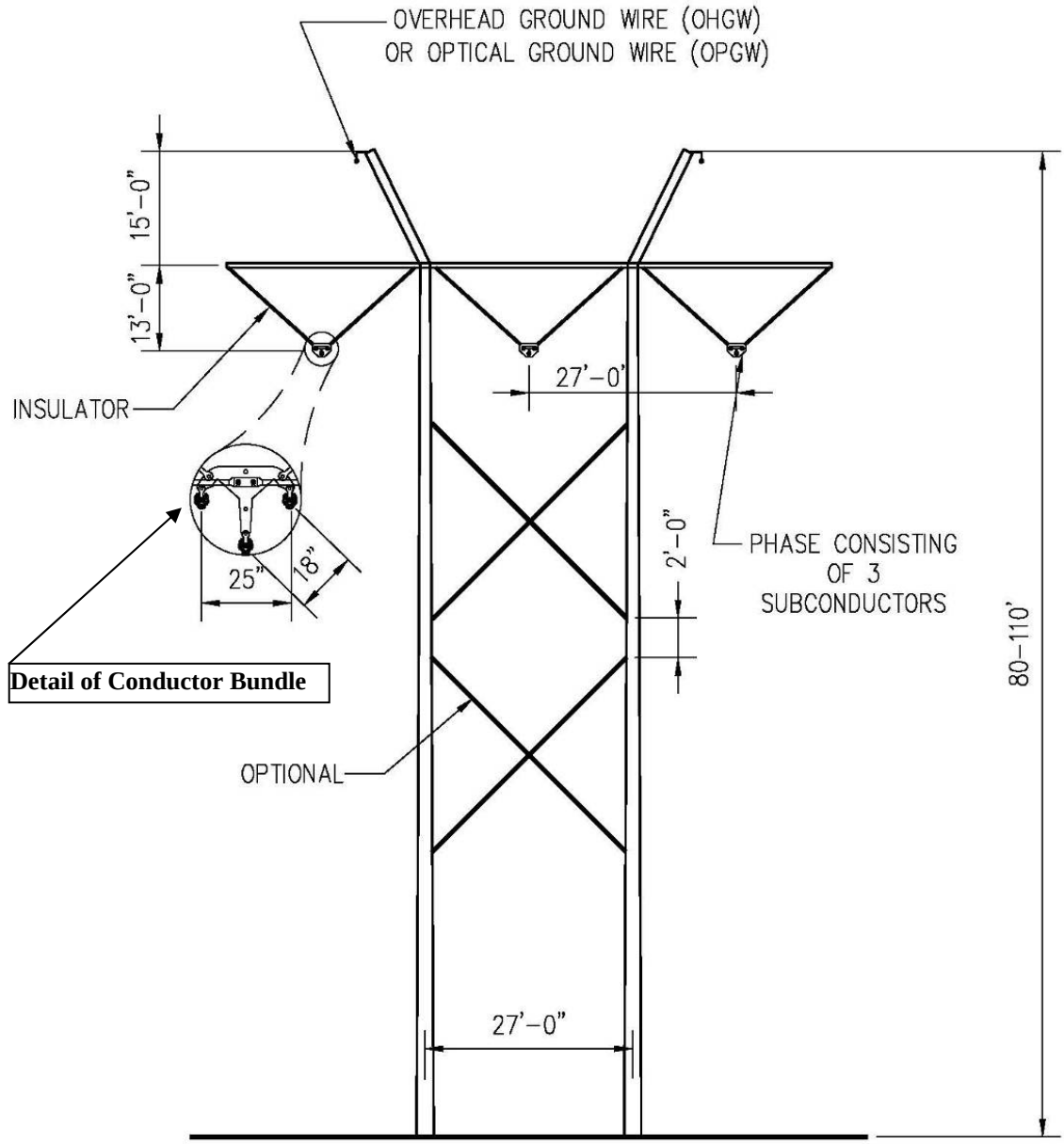

Figure B-2. Proposed Tangent Single-Circuit 345-kV H-Frame Structure

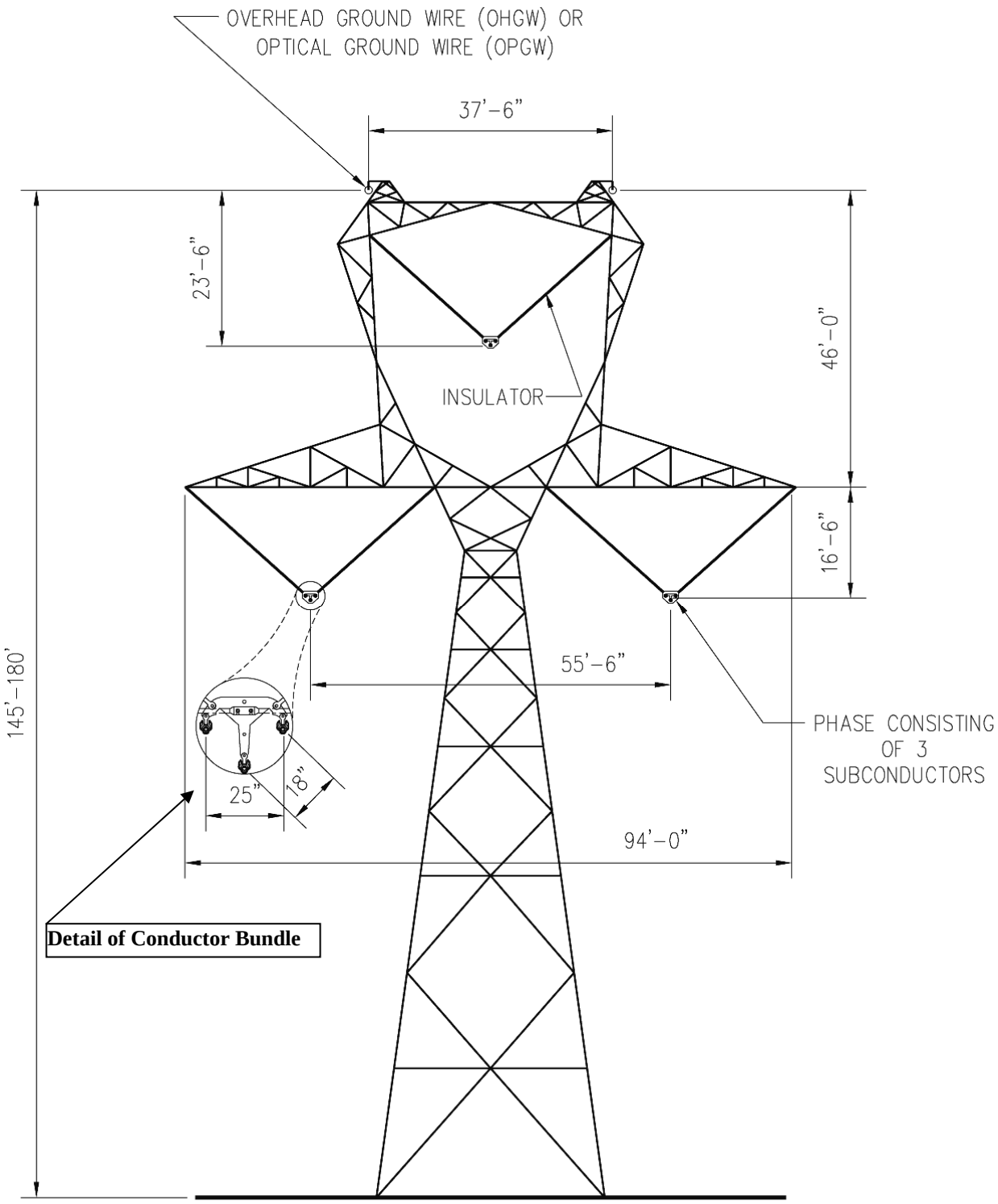

Figure B-3. Proposed Tangent Single-Circuit 500-kV Lattice Steel Structure

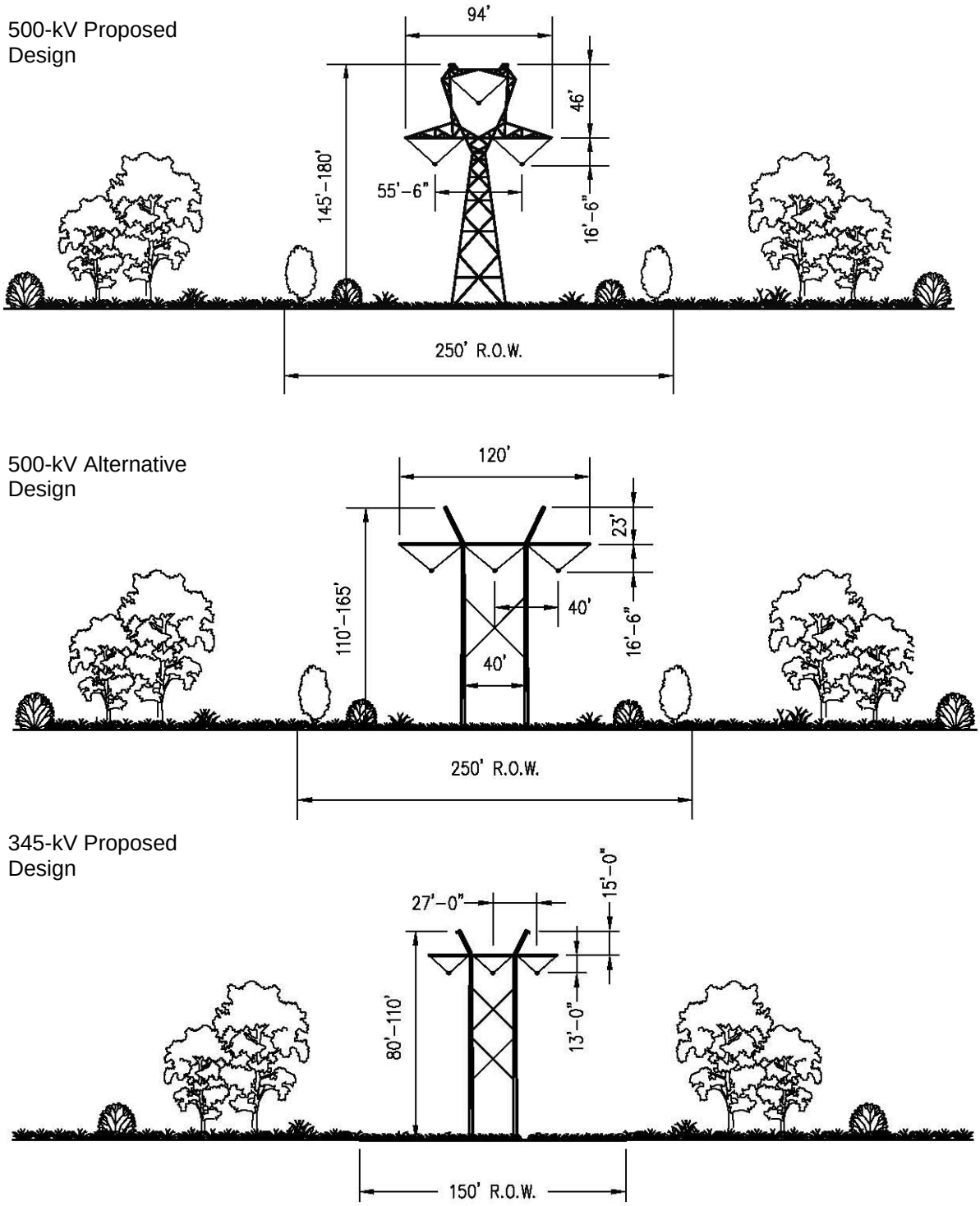

Figure B-4. Proposed 500-kV and 345-kV Single-Circuit ROW Configurations

230-kV Proposed Design

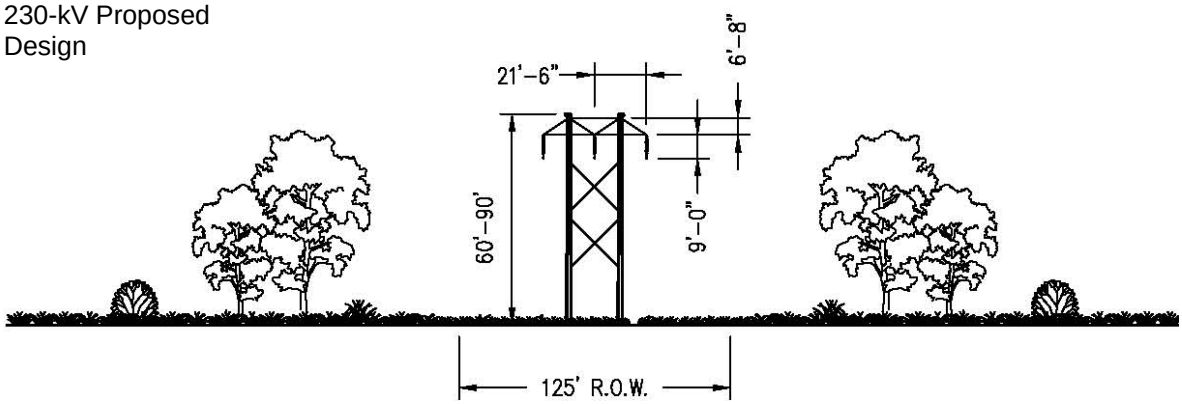

Figure B-5. Proposed 230-kV Single-Circuit ROW Configurations

Structure Variation

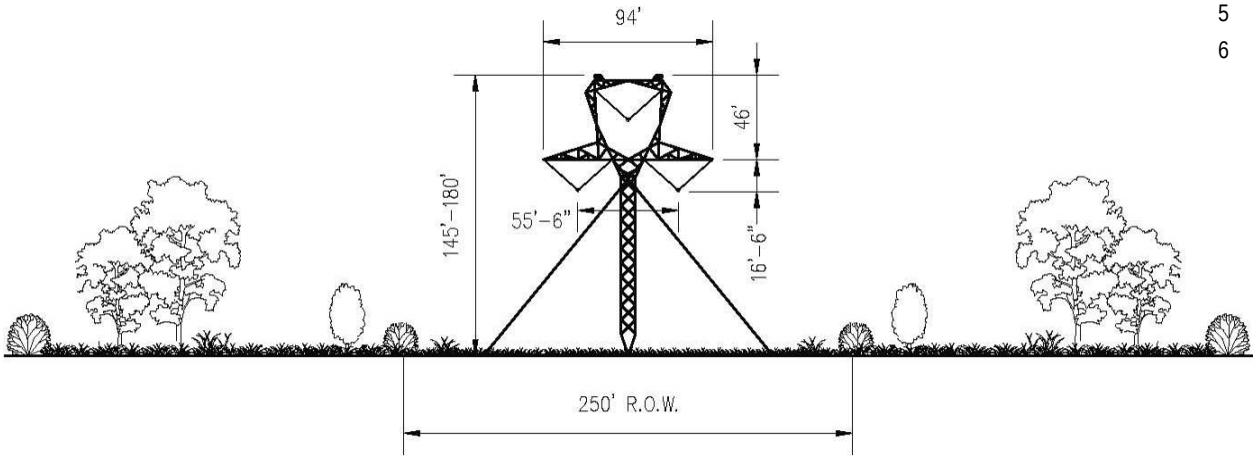

Guyed "Delta

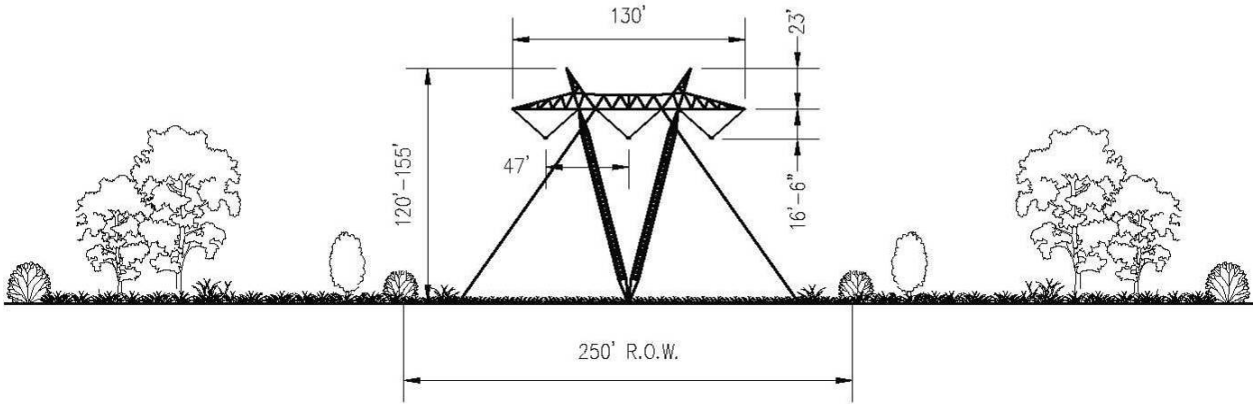

Guyed "V"

Figure B-6. Single-Circuit 500-kV Guyed "Delta" and "V" Structure Types Considered but not Carried Forward

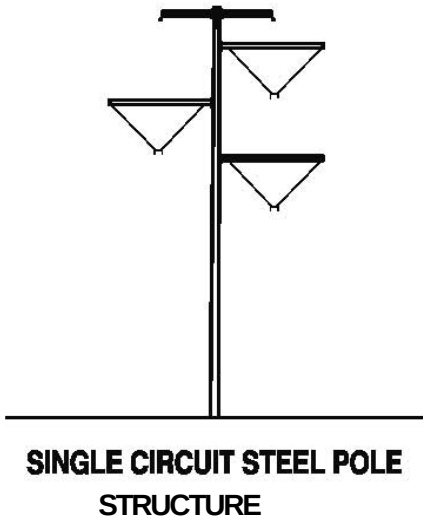

Figure B-7. 500-kV Monopole Structure Type Considered but not Carried Forward

500-kV Galvanized Lattice Steel Structures

Lattice steel towers are fabricated with galvanized steel members treated to produce a dulled galvanized finish. The average distance between 500-kV towers is 1,200 to 1,300 feet. Structure heights vary depending on terrain and the requirement to maintain minimum conductor clearances from ground. The 500-kV single-circuit towers vary in height from 145 to 180 feet. **Table B-1** describes the approximate number and type of structures by segments, typical height, typical distances between structures, and temporary and permanent disturbance areas by structure.

Transposition Structures

At certain points along a line segment, it may be desirable to install a transposition structure. A transposition structure is used to “transpose” each of the three phases in the transmission circuit so that each phase occupies the same physical position on the tower for approximately equal distances along the line segment between substations. The need to install a transposition structure in a particular line segment is dependent on the electrical characteristics and length of the line and the need to balance the electrical impedance of the transmission line between substations. Typically, for line segments less than 50 miles long, transpositions would be accommodated at the substation locations. For line segments over 50 miles, there would be three transpositions installed —two at intermediate points along the segment and one near the substation to return phases to original positions. The need for transposition structures in a particular line segment would be determined during final design. The transposition structures will have the same access and ground disturbance requirements as the 500-kV lattice steel structures, and would be similar in appearance.

Table B-1. Proposed Structure Configuration

Segment	Transmission Line Length (miles)	Structure Type	Typical Height (feet)	No. of Structures[1/]	Average Distance Between Structures[1/] (feet)	Temporary Disturbance Area per structure (sq. feet.)	Permanent Disturbance Area per structure (sq. feet.[2/])
1W(a)	73.8	230-kV Steel H-Frame Structure	60–90	531	800	ROW Width 125 feet x 150 feet = 0.43 acre	10 feet x 40 feet = 0.01 acre
1W(c)	73.6	230-kV Steel H-Frame Structure	60–90	547	existing span lengths assumed to be 800	ROW Width 125 feet x 150 feet = 0.43 acre	10 feet x 40 feet = 0.01 acre
2	91.9	500-kV Single-Circuit Lattice Tower	145–180	390	1,200–1,300	ROW Width 250 feet x 250 feet = 1.43 acres	50 feet x 50 feet = 0.06 acre
3	45.9	500-kV Single-Circuit Lattice Tower	145–180	194	1,200–1,300	ROW Width 250 feet x 250 feet = 1.43 acres	50 feet x 50 feet = 0.06 acre
3A	5.1	345-kV Single-Circuit Tubular Steel H-Frame	80-110	25	800	ROW Width 150 feet x 150 feet = 0.52 acres	15 feet x 40 feet = 0.01 acre
4	197.6	500-kV Single-Circuit Lattice Tower	145–180	856	1,200–1,300	ROW Width 250 feet x 250 feet = 1.43 acres	50 feet x 50 feet = 0.06 acre
5	55.7	500-kV Single-Circuit Lattice Tower	145–180	246	1,200–1,300	ROW Width 250 feet x 250 feet = 1.43 acres	50 feet x 50 feet = 0.06 acre
6	0.5	500-kV Single-Circuit Lattice Tower	145–180	10	varies	ROW Width 250 feet x 250 feet = 1.43 acres	50 feet x 50 feet = 0.06 acre
7	118.2	500-kV Single-Circuit Lattice Tower	145–180	523	1,200–1,300	ROW Width 250 feet x 250 feet = 1.43 acres	50 feet x 50 feet = 0.06 acre
8	131.5	500-kV Single-Circuit Lattice Tower	145–180	575	1,200–1,300	ROW Width 250 feet x 250 feet = 1.43 acres	50 feet x 50 feet = 0.06 acre
9	162.2	500-kV Single-Circuit Lattice Tower	145–180	708	1,200–1,300	ROW Width 250 feet x 250 feet = 1.43 acres	50 feet x 50 feet = 0.06 acre
10	34.4	500-kV Single-Circuit Lattice Tower	145–180	157	1,200–1,300	ROW Width 250 feet x 250 feet = 1.43 acres	50 feet x 50 feet = 0.06 acre

1/ Reasonable estimate from preliminary engineering. In infrequent locations where spans between structures exceed typical span lengths anticipated (up to approximately 1,200 feet to 1,800 feet depending on voltage and ROW width), the right-of-way may need to be increased to provide clearance from conductors blown toward the right-of-way edge.
2/ Permanent disturbance estimated based on size of structures and a reasonable distance around each to allow for annual ground inspection and the vegetation control needed to allow for safety and inspection.

2.1.2 Structure and Conductor Clearances

Conductor phase-to-phase and phase-to-ground clearance parameters are determined in accordance with the NESC, ANSI C2, produced by the ANSI. This code provides for minimum distances between the conductors and ground, crossing points of other lines and the transmission support structure, and other conductors, and minimum working clearances for personnel during energized operation and maintenance activities (IEEE 2007). Typically, the clearance of conductors above ground is 35 feet for 500 kV, 30 feet for 345 kV, and 28 feet for 230 kV. During detailed design, clearances may be increased to account for localized conditions.

2.1.3 Structure Foundations

The 500-kV single -circuit lattice steel structures each require four foundations with one on each of the four corners of the lattice towers. The foundation diameter and depth will be determined during final design and are dependent on the structure type and type of soil or rock present at each specific site. Typically, the foundations for the single-circuit tangent lattice towers are composed of steel-reinforced concrete drilled piers with a typical diameter of 4 feet and a depth of approximately 22 feet. Typical foundation diameters and depths for the single -circuit structure families are shown in Table B-2.

Table B-2. Foundation Excavation Dimensions

Structure	No. of Holes	Depth (feet)	Diameter (feet)	Concrete (cubic yards)
500-kV Single Circuit - Tangent Lattice Tower	4	22.0	4	41
500-kV Single Circuit - Small Angle Lattice Tower	4	24.5	4	46
500-kV Single Circuit - Medium Angle Lattice Tower	4	27.0	4	50
500-kV Single Circuit - Medium Dead-End Lattice Tower[1/]	4	29.5	5	86
500-kV Single Circuit - Heavy Dead-End Lattice Tower	4	32.0	5	93

1/ "Dead-end structure" typically refers to a structure that is placed at a point where the transmission line requires extra support due to a sharp change in vertical or horizontal direction.

The 230-kV and 345kV single-circuit H-frame structures are directly embedded into the ground and do not require concrete foundations. The embedment depth is typically 10 percent of the pole length plus 2 feet for 230-kV and 10 percent of the pole length plus 5 feet for 345-kV, which for the Project is expected to be between 9 and 12 feet (230-kV) and between 14 and 18 feet (345-kV) based on the structure heights proposed for the Project. The diameter of the hole excavated for embedment is typically the pole diameter plus 18 inches. When a pole is placed in a hole, native or select backfill will be used to fill the voids around the perimeter of the hole.

Depending on underlying soil and rock conditions, the 345-kV H-frames may be supported by steel-reinforced concrete drilled piers. Additionally, all 345-kV angle structures will be self-supporting (i.e. no guys) such that they will require concrete drilled pier foundations. The foundation diameter and depth will be determined during final design and are dependent on the structure type and type of soil or rock present at each specific site. If required, each steel pole of a 345-kV structure will have its own drilled pier foundation.

2.2 Conductors

The proposed conductor for the 500-kV lines is 1,949.6 kcmil[2] 42/7 ACSR/TWD, "Athabaska/TW"[3]. Each phase of a 500-kV three-phase circuit[4] is composed of three subconductors in a triple bundle configuration. The individual 1,949.6 kcmil conductors are bundled in a triangular configuration with spacing of 18 and 25 inches between subconductors (see Figure B-2). The triple-bundled configuration is proposed to provide adequate current carrying capacity and to provide for a reduction in audible noise and radio interference as compared to a single large-diameter conductor. Each 500-kV subconductor has a 42/7 aluminum/steel stranding, with an overall conductor diameter of 1.504 inches and a weight of 2.199 pounds per foot and a non-specular finish[5].

For the 5.0 miles of Segment 3A, the proposed conductor for the 345-kV lines is 1,272 kcmil 45/7 ACSR "Bittern". Each phase of the 345-kV three-phase circuit is composed of three subconductors in a triple-bundle configuration. The individual 1,272 kcmil conductors are bundled in a triangular configuration with spacing of 18 and 25 inches between subconductors (see Figure B-3). The triple-bundle configuration is proposed to provide adequate current carrying capacity and to provide for a reduction in audible noise and radio interference when compared to a single large-diameter conductor. Each 345-kV conductor has a 45/7 aluminum/steel stranding, with an overall conductor diameter of 1.345 inches and a weight of 1.432 pounds per foot and a non-specular finish.

At 500 kV and 345 kV, where multiple conductors are utilized in a bundle for each phase, the bundle spacing is maintained through the use of conductor spacers at intermediate points along the conductor bundle between each structure. The spacers serve a dual purpose: in addition to maintaining the correct bundle configuration and spacing, the spacers are also designed to damp out wind-induced vibration in the conductors. The number of spacers required in each span between towers is determined during the final design of the transmission line.

The proposed conductor for the new 230-kV line and for reconstructing of the portion of the existing Dave Johnston – Rock Springs 230-kV line between the Dave Johnston Power Plant and existing Shirley Basin Substation is 1,272 kcmil 45/7 ACSR "Bittern." Each phase of a 230-kV three-phase circuit is composed of two subconductors in a double-bundle configuration. The individual 1,272 kcmil conductors are bundled in a vertical configuration with a spacing of 18 inches. The double-bundle configuration is proposed to provide adequate current carrying capacity and to provide for a reduction in audible noise and radio interference when compared to a single large-diameter conductor. Each 230-kV conductor has a 45/7 aluminum/steel stranding, with an overall

[2] Kcmil (1000 cmils) is a quantity of measure for the size of a conductor; kcmil wire size is the equivalent cross-sectional area in thousands of circular mils. A circular mil (cmil) is the area of a circle with a diameter of one thousandth (0.001) of an inch.
[3] Aluminum/steel refers to the conductor material composition. The preceding numbers indicate the number of strands of each material type present in the conductor (i.e., 42/7 aluminum/steel stranding has 42 aluminum strands wound around 7 steel strands).
[4] For transmission lines, a circuit consists of three phases. A phase may consist of one conductor or multiple conductors (i.e., subconductors) bundled together.
[5] Non-specular finish refers to a "dull" finish rather than a "shiny" finish.

conductor diameter of 1.345 inches and a weight of 1.432 pounds per foot and a non-specular finish.

The proposed conductor for reconstructing the portion of the existing Dave Johnston – Rock Springs 230-kV line between the existing Shirley Basin Substation and the proposed Aeolus Substation is 1,557.4 kcmil 36/7 ACSS/TW "Potomac." Each phase of a 230-kV three-phase circuit is composed of two subconductors in a double-bundle configuration. The individual 1,557.4 kcmil conductors are bundled in a vertical configuration with a spacing of 18 inches. The double-bundle configuration is proposed to provide adequate current carrying capacity and to provide for a reduction in audible noise and radio interference when compared to a single large-diameter conductor. Each 230-kV conductor has a 36/7 aluminum/steel stranding, with an overall conductor diameter of 1.345 inches and a weight of 1.755 pounds per foot and a non-specular finish.

Vertical double bundle configuration does not use spacers. Spacers are required only in the last span into a substation where the bundle rolls from vertical to horizontal.

2.3 Other Hardware

2.3.1 Insulators

As shown in Figure B-1, insulator assemblies for 230-kV H-frame tangent structures will consist of one insulator string hung vertically from the cross arm in the form of an "I." As shown in Figures B-2 and B-3, insulator assemblies for 345-kV and 500-kV tangent structures will consist of two strings of insulators normally in the form of a "V." These strings are used to suspend each conductor bundle (phase) from the structure, maintaining the appropriate electrical clearance between the conductors, the ground, and the structure. The V-shaped configuration of the 345-kV and 500-kV insulators also restrains the conductor so that it will not swing into the structure in high winds. Dead-end insulator assemblies for 230-kV, 345-kV, and 500-kV lines will use an I-shaped configuration, which consists of insulators connected horizontally from either a tower dead-end arm or a dead-end pole in the form of an "I." Insulators are composed of grey porcelain or green-tinted toughened glass or single unit polymer (non-ceramic insulators). Insulators will be made of materials that have reduced potential to reflect and refract light.

2.3.2 Grounding Systems

AC transmission lines such as the Gateway West transmission lines have the potential to induce currents on adjacent metallic structures such as transmission lines, railroads, pipelines, fences, or structures that are parallel to, cross, or are adjacent to the transmission line. Induced currents on these facilities occur to some degree during steady-state operating conditions and during a fault condition on the powerline. For example, during a lightning strike on the line, the insulators may flash over, causing a fault condition on the line and current flows down the structure through the grounding system (i.e., ground rod or counterpoise) and into the ground. The magnitude of the effects of the AC induced currents on adjacent facilities is highly dependent on the magnitude of the current flows in the transmission line, the proximity of the adjacent

facility to the line, and the distance (length) for which the two facilities parallel one another in proximity.

The methods and equipment needed to mitigate these conditions will be determined through electrical studies of the specific situation. As standard practice and as part of the design of the Project, electrical equipment and fencing at the substation is grounded. All fences, metal gates, pipelines, metal buildings, and other metal structures adjacent to the ROW that cross or are within the transmission line ROW will be grounded. If applicable, grounding of metallic objects outside of the ROW may also occur, depending on the distance from the transmission line as determined through the electrical studies. These actions take care of the majority of induced current effects on metallic facilities adjacent to the line by shunting the induced currents to ground through ground rods, ground mats, and other grounding systems, thus reducing the effect that a person may experience when touching a metallic object near the line (i.e., reduce electric shock potential). In the case of a longer parallel facility, such as a pipeline parallel to the Project over many miles, additional electrical studies are undertaken to identify any additional mitigation measures (more than the standard grounding practices) that need to be implemented to prevent damaging currents from flowing onto the parallel facility, and to prevent electrical shock to a person that may come in contact with the parallel facility. Some of the typical measures that could be considered for implementation, depending on the degree of mitigation needed, could include (NACE International 2003):

- **Fault Shields –** shallow grounding conductors connected to the affected structure adjacent to overhead electrical transmission towers, poles, substations, etc. They are intended to provide localized protection to the structure and pipeline coating during a fault event from a nearby electric transmission power system.
- **Lumped Grounding –** localized conductor or conductors connected to the affected structure at strategic locations (e.g., at discontinuities). They are intended to protect the structure from both steady-state and fault AC conditions.
- **Gradient Control Wires –** a continuous and long grounding conductor or conductors installed horizontally and parallel to a structure (e.g., pipeline section) at strategic lengths and connected at regular intervals. These are intended to provide protection to the structure and pipeline coating during steady-state and fault AC conditions from nearby electric transmission power systems.
- **Gradient Control Mats –** typically used for above ground components of a pipeline system, these are buried ground mats bonded to the structure, and are used to reduce electrical step and touch voltages in areas where people may come in contact with a structure subject to hazardous potentials. Permanent mats bonded to the structure may be used at valves, metallic vents, cathodic protection test stations, and other aboveground metallic and nonmetallic appurtenances where electrical contact with the affected structure is possible. In these cases there is no “standard” solution that would solve these issues every time. Instead, each case must be studied to determine the magnitude of the induced currents and the most appropriate mitigation given the ground resistivity, distance paralleled, steady-state and fault currents, fault clearing times expected on the transmission line, and distance between the line and the pipeline, to name

a few of the parameters. If the electrical studies indicate a need to install cathodic protection devices on a parallel pipeline facility, a distribution supply line interconnection may be needed to provide power to the cathodic protection equipment.

During final design of the transmission line segments, appropriate electrical studies will be conducted to identify the issues associated with paralleling other facilities and the types of equipment needed to be installed (if any) to mitigate the effects of the induced currents.

2.3.3 Minor Additional Hardware

In addition to the conductors, insulators, and overhead shield wires, other associated hardware will be installed on the tower as part of the insulator assembly to support the conductors and shield wires. This hardware includes clamps, shackles, links, plates, and various other pieces composed of galvanized steel and aluminum.

A grounding system will be installed at the base of each transmission structure that consists of copper ground rods embedded into the ground in immediate proximity to the structure foundation and connected to the structure by a buried copper lead. When the resistance to ground for each transmission structure is greater than 25 ohms with the use of ground rods, counterpoise is installed to lower the resistance with the intent to achieve 25 ohms or less. Counterpoise consists of a bare copper-clad or galvanized-steel cable buried a minimum of 12 inches deep, extending from structures (from one or more legs of structure) for approximately 200 feet within the ROW.

Other hardware that is not associated with the transmission of electricity may be installed as part of the Project. This hardware may include aerial marker spheres or aircraft warning lighting as required for the conductors or structures per FAA regulations.[6] Structure proximity to airports and structure height are the determinants of whether FAA regulations would apply based on an assessment of wire/tower strike risk. Structure lighting will not be required because proposed structures will be less than 200 feet tall and will not be near airports that require structure lighting. Site-specific exceptions may be made to comply with US Air Force requirements in restricted air space near the Jarbidge Military Operations Area and the Saylor Creek Air Force Range, or to comply with FAA requirements where structure adjustments are not feasible near regulated airports.

2.4 Communication Systems

2.4.1 Optical Ground Wire

Reliable and secure communications for system control and monitoring of Gateway West is very important to maintain the operational integrity of the Project and of the overall interconnected system. Primary communications for relaying and control is provided via the OPGW that will be installed on the transmission lines. For the 500-kV transmission lines, a secondary communications path is provided by the Companies' existing microwave system, which is currently installed from the Central Wyoming area

[6] U.S. Department of Transportation, Federal Aviation Administration, Advisory Circular AC 70/7460-1K Obstruction Marking and Lighting, August 1, 2000; and Advisory Circular AC 70/7460-2K Proposed Construction or Alteration of Objects that May Affect the Navigable Airspace, March 1, 2000.

near the Windstar Substation west to existing substations near Boise, Idaho. A secondary communication path may also be developed using a powerline carrier. No new microwave sites are anticipated for the Project. Updated microwave equipment may be installed at existing sites and at the substations.

Each structure has two lightning protection shield wires installed. For the 500-kV single-circuit lattice steel structures, shield wires are installed on the peaks of each of the structures (see Figure B-2). On the 230-kV and 345-kv H-frame structures (see Figure B-1) these lightning protection shield wires are installed near the top of each pole. On 500-kV, 345-kV, and 230-kV lines where communication is required, one of the shield wires is composed of extra high strength steel wire with a diameter of 0.495 inch and a weight of 0.517 pound per foot. The second shield wire is an OPGW constructed of aluminum and steel, which carries 48 glass fibers within its core. On the 500-kV lines, the OPGW has a diameter of 0.637 inch and a weight of 0.375 pound per foot; on the 345-kV lines, the OPGW has a diameter of 0.495 inch and a weight of 0.517 pound per foot. On the 230-kV lines, the OPGW has a diameter of 0.465 inch and a weight of 0.270 pound per foot. The glass fibers inside the OPGW shield wire will provide optical data transfer capability among the Companies' facilities along the fiber path. The data transferred are required for system control and monitoring. On lines where communication is not required, both of the shield wires are composed of extra high strength steel wires with a diameter of 0.495 inch and a weight of 0.517 pound per foot.

For the Gateway Project, all 500-kV line segments are designed to carry an OPGW. For the 230-kV lines, Segment 1W(a) and a portion of 1W(c) are designed to carry an OPGW. Between the new Anticline Substation and the existing Jim Bridger Substation, two communication paths (underground or aerial) are required for redundancy. One path is carried by the 345-kV line (Segment 3A). The second path is carried on Segment 4 for a couple of miles from Anticline to a point where the segment crosses existing 230-kV lines. At this point, the OPGW is routed along the existing 230-kV lines either overhead on the existing structures by replacing an existing shield wire with an OPGW, or installing the communication wire underground within the existing 230-kV ROW to Jim Bridger Substation.

2.4.2 Regeneration Stations

As the data signal is passed through the optical fiber cable, the signal degrades with distance. Consequently, signal regeneration stations are required to amplify the signals if the distance between substations or regeneration stations exceeds 55 miles. As summarized in Table B-3, a total of 13 regeneration stations are required.

Table B-3. Proposed Regeneration Station Locations

Segment	Number	Total Construction Acres	Total Operations Acres
Segment 1W(a) – Windstar to Aeolus	1	1	0.5
Segment 2 – Aeolus to Creston	1	1	0.5
Segment 3 – Creston to Anticline	1	1	0.5*
Segment 4 – Anticline to Populus	3	3	1.5
Segment 7 – Populus to Cedar Hill	2	2	1
Segment 8 – Midpoint to Hemingway	2	2	1
Segment 9 – Cedar Hill to Hemingway	3	3	1.5

* This regeneration station will be located in the vicinity of the Creston site.

A regeneration station may be housed within a substation control house in those cases where a substation is located along or near the final transmission route at an appropriate milepost; otherwise, land must be obtained or additional area requested. Where a new site is required, the typical site is 100 feet by 100 feet, with a fenced area of 75 feet by 75 feet. A 12-foot- by 32-foot- by 9-foot-tall building or equipment shelter (metal or concrete) is placed on the site, and access roads to the site and power from the local electric distribution circuits are required. An emergency generator with a liquid petroleum gas fuel tank is installed at the site inside the fenced area. Two diverse cable routes (aerial and/or buried) from the transmission ROW to the equipment shelter are required. Figure B-8 illustrates the plan arrangement of a typical regeneration station.

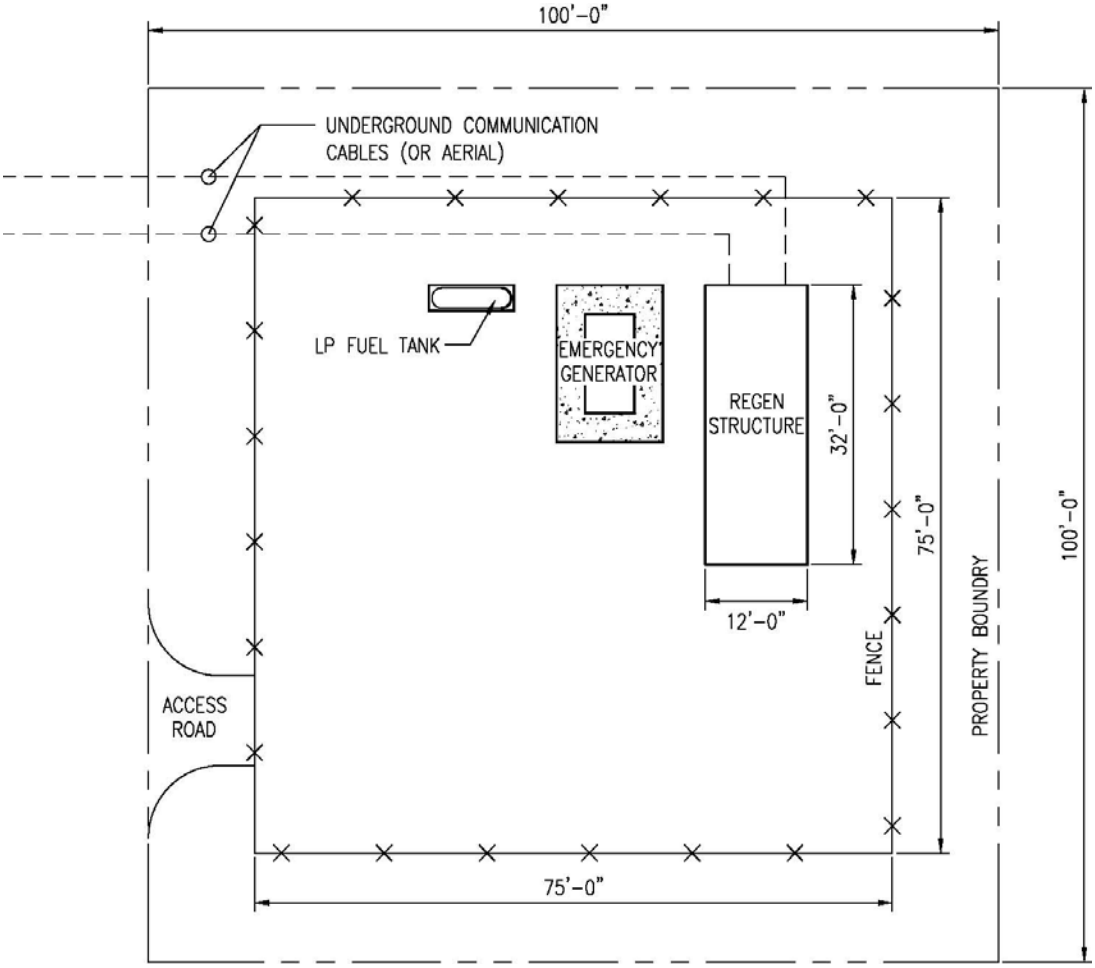

Figure B-8. Typical Regeneration Station Site

2.5 Roads Used During Construction and Operation

Access and service roads are an essential part of the construction and operation of the Gateway West transmission line. Large foundation auger equipment, heavily loaded trucks, cranes, and specialized line construction equipment will be required for construction, maintenance, and emergency restoration activities. Annual ground based inspections require vehicular access using 4x4 trucks or 4x4 all-terrain vehicles (ATVs)

to each structure site. Table B-4 summarizes the four types of roads needed for accessing the transmission line structures for the Project.

The only temporary roads are those that are constructed to access temporary use areas, where needed, including multi-purpose yards and fly yards.

Table B-4. Typical Road Requirements for Transmission Line System

Road Type	Access Roads for Construction	Access Roads for Routine Operations	Access Roads for Non-Routine Operations Use
Existing roads requiring no improvement	No change	No change	No change
Existing roads requiring improvement	Unsurfaced 14-foot-wide straight sections of road and 16- to 20-foot-wide sections at corners	For routine activities, an 8-foot portion of the road will be used and vehicles will drive over the vegetation (“two-track”).	For non-routine maintenance requiring access by larger vehicles, the full width of the access road may be used. Roads will be repaired, as necessary, but will not be routinely graded. In order to preserve the ability to enter rapidly, the road structure (cuts and fills) will be left in place.
New roads	Unsurfaced 14-foot-wide straight sections of road and 16- to 20-foot-wide sections at corners	For routine activities, an 8-foot portion of the road will be used and vehicles will drive over the vegetation (“two-track”).	
Temporary roads	Unsurfaced 14-foot-wide straight sections of road and 16- to 20-foot-wide sections at corners	None—contours will be restored, and the road will be ripped and seeded.	None

2.5.1 Construction Access Roads

During construction vehicular access will be required to each structure. New access roads will be constructed and existing roads widened as needed to provide a 14-foot-wide travel way. Roads not required for operations will be restored to their original condition or left as is, depending on landowner/land management agency requirements.

The largest of the heavy equipment needed, which dictates the minimum needed road dimensions, is a truck-mounted aerial lift crane, 100,000 pounds gross vehicle weight, 8x8 drive, 210-foot telescoped boom. Vehicle width is 8’6” (102 inches) or less and wheelbase is around 25 feet. To accommodate this equipment, the road specifications require a 14-foot-wide road top (travel way) and 16- to 20-foot-wide road width in turns. The required road disturbance area and travel way in areas of rolling to hilly terrain will require a wider disturbance to account for cuts and fills, turning radii, and/or where vehicles are required to pass one another while traveling in opposite directions.

Access road construction employs heavy equipment including bulldozers, front-end loaders, dump trucks, backhoes, excavators, both tracked and rubber-tired, and graders. Other specialized equipment, including boom trucks to install culverts in some areas, will be used where needed. Roads will be built to provide a stable, permanent 14-foot-wide travel surface at straight sections and 16- to 20-foot wide travel surface at turns. Depending on the side slope, this can include cuts and fills, crowning and

ditching, at-grade water bars, and various kinds of waterbody crossings. Figures B-9a and B-9b show the typical cross-sections created during construction of access roads.

Construction of new access roads begins with vegetation removal. Merchantable timber is cut and yarded to landings where the logs can be loaded on to trucks and hauled to market. Non-merchantable logs are stored along the edge of the ROW for later use in site restoration. Smaller vegetation will be lopped and scattered outside the road prism. Topsoil will be stripped from the road prism as required by federal land management agencies or landowners. Topsoil will be stored adjacent to the road or in a nearby workspace. Appropriate erosion control devices will be installed to prevent erosion or loss of the topsoil, including but not limited to tackifiers to prevent wind erosion and fugitive dust and silt fencing to prevent sediment runoff. Roads surfaces will be stabilized if needed with road base but will not be routinely paved with asphalt or concrete. Access roads will have either dirt surfaces or have road base as surfacing where needed. As needed, the construction pad and access road will be graded to allow for safe access and construction. The grading may include cut and fill as needed to achieve a workable safe surface.

“New Roads” will receive one of the following treatments:

- In areas of rolling to hilly terrain, roads may require blading as shown on Figure B-9a, for ditches, realignment, widening, cut and fill, graveling, or installation of culverts.
- In flatter areas overland travel may be used. Overland travel means following a staked road alignment, either cutting the vegetation and leaving the root crowns and then driving over it (clear and cut), or just driving over the vegetation if it is low enough (drive and crush). In either case, a blade may be used if needed to remove obstructions in limited places.

“Existing Roads Needing Improvement” will have varied conditions across the Project. These roads were classified as such to recognize that the Contractor MAY need to perform some level of improvement to provide the safe travel way required for construction. Based on the Contractor’s construction plan and the construction techniques employed, it is anticipated that sections of the access roads classified as “Existing Roads Needing Improvement” will receive one of the following treatments.

- The existing road will be sufficient and provide a safe travel way throughout the duration of line construction.
- The existing road will be sufficient and provide a safe travel way during a portion of the line construction period. Weather events, progressive damage due to heavy use and larger heavier equipment needed are examples of reasons that an existing road would need some level of construction at one or more intermediate points during line construction.
- The existing road at project initiation needs more extensive construction, including blading, prior to the start of line construction.
- Portions of these roads will involve clear and cut, or just drive and crush.

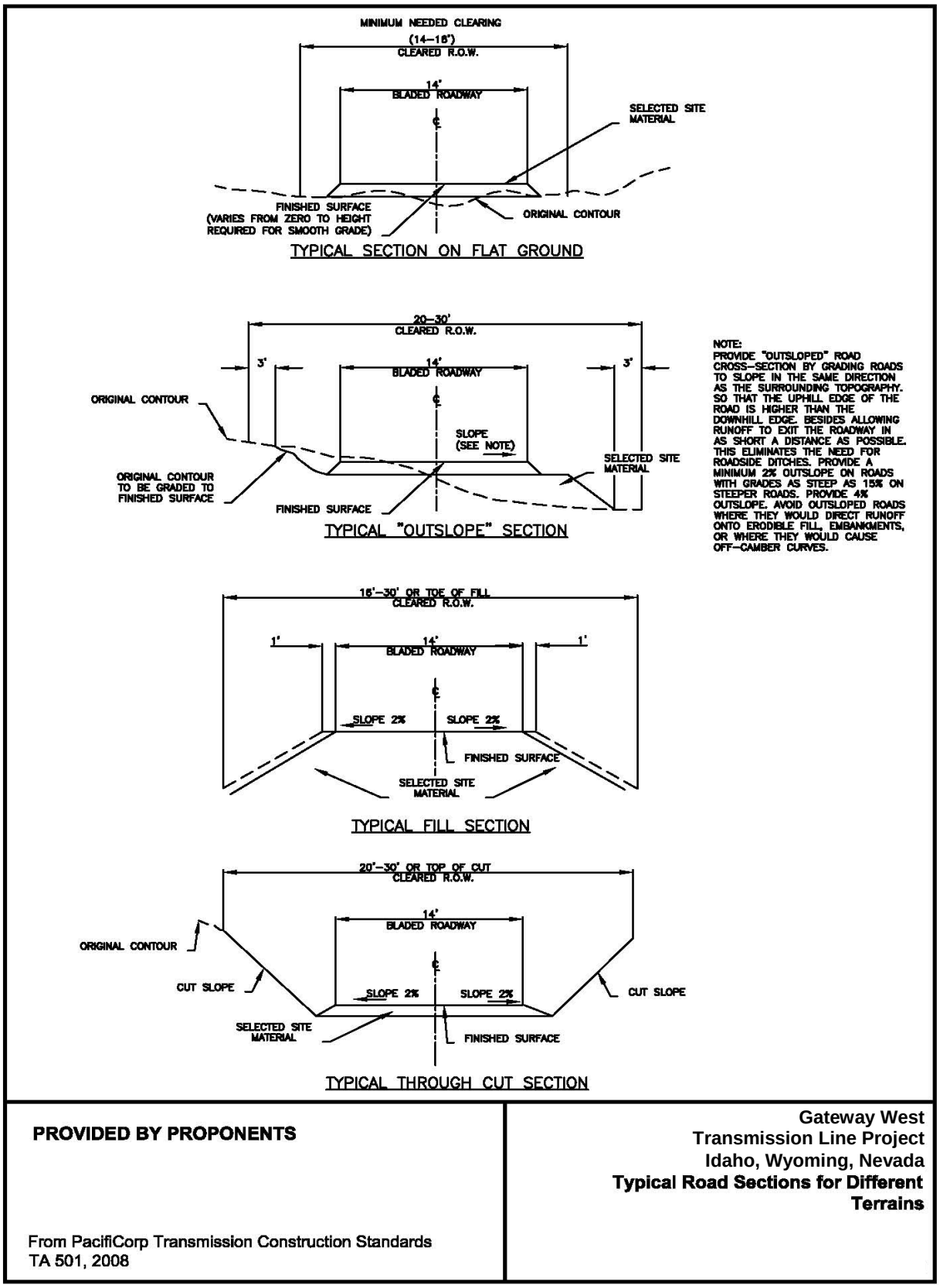

Figure B-9a. Typical Road Section for Different Terrains

TA 503

Roads—Water Bars and Water Dips

A. Scope

This standard describes drainage methods, including water bars, water dips, ditches, and outsloping, which can be used where intermittent or permanent streams cross roadways. Depending on the method used, drainage structures should be installed during or after basic road construction. For information on ditches and culverts see TA 504, *Roads—Culvert Installation*.

B. Water Bars and Dips

Water bars are narrow structures which can be constructed at various depths depending on the need. Deep bars are generally used on roads closed to vehicle traffic. Figure 1 shows a typical shallow water bar constructed across a road.

Figure 1—Water Bar

Water bars can be constructed with hand tools, but bulldozers are most commonly used. It is best to start at the end of the road and work outward so the bars are not damaged with frequent crossing by heavy machinery.

Water bars should be installed at an approximate 30° angle downslope. Figure 2 shows dimensions for construction of water bars and water dips with and without drainage ditches to be used on access and right-of-way roads. The outflow end of the water bar should prevent water from accumulating and should not flow directly into a stream. This will allow sediment to settle out of the water, preventing erosion. As a supplement to water bars on closed roads, logging slash can be lopped and scattered, grass can be planted, or both. Table 1 shows recommended spacing between water bars for various road grades.

Table 1—Distance Needed Between Water Bars

Road grade (percent)	Distance (feet)
2	250
5	135
10	80
15	60
20	45
25	40
30	35

Source: Kochenderfer 1970, p. 28

Transmission Construction Standard	Roads—Water Bars and Water Dips	PACIFICORP A MIDAMERICAN ENERGY HOLDINGS COMPANY	
© 2008 by PacifiCorp. All rights reserved.			
Engineer (C. Wright): CLW Standards Manager (G. Lyons): GS		7 Apr 08	TA 503 Page 1 of 4

Figure B-9b. Water Bars and Dips (TA 503, 1 of 3 pages)

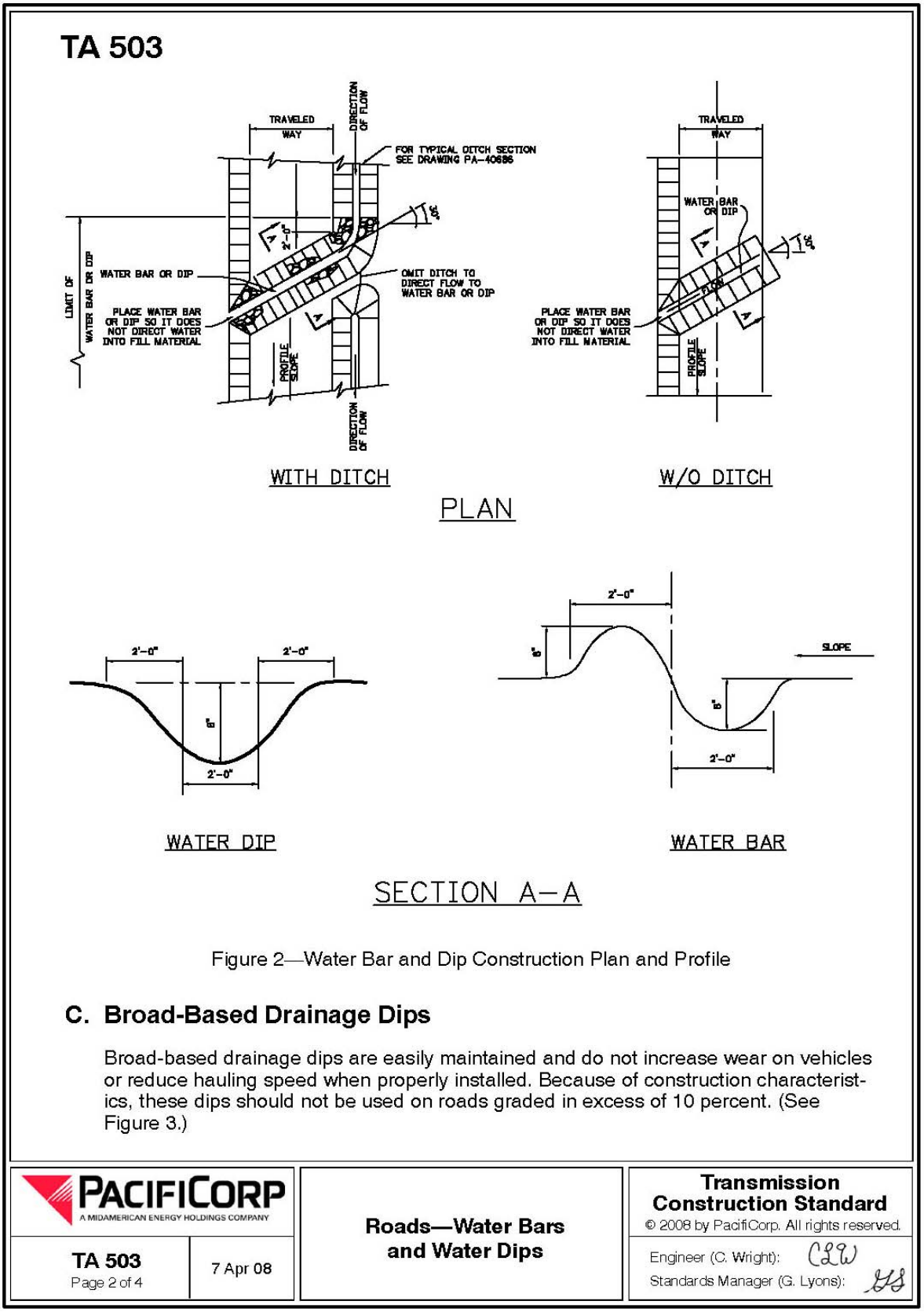

Figure 2—Water Bar and Dip Construction Plan and Profile

C. Broad-Based Drainage Dips

Broad-based drainage dips are easily maintained and do not increase wear on vehicles or reduce hauling speed when properly installed. Because of construction characteristics, these dips should not be used on roads graded in excess of 10 percent. (See Figure 3.)

Figure B-9b. Water Bars and Dips (TA 503, 2 of 3 pages)

TA 503

Table 2—Minimum Distance Needed Between Water Bars

Road grade (percent)	Distance (feet)
2 - 4	300 - 200
5 - 7	180 - 160
8 - 10	150 - 140

Source: Kochenderfer 1970, p. 19, 25

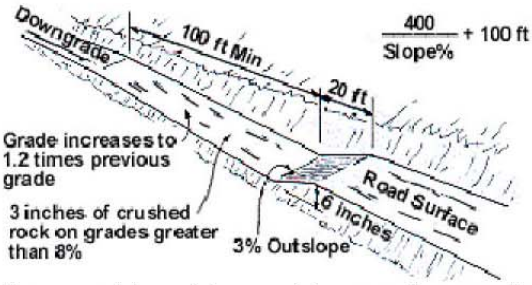

Figure 3—Typical Spacing Between Drainage Dips

As with a water bar, care should be taken to ensure adequate drainage at the outflow of a dip. Water dips should never be designed to discharge directly into a stream. The discharge area should be protected with stone, grass, sod, heavy litter cover, brush, logs, or other natural material which will reduce the velocity of the water. Natural litter may be adequate in many cases if the terrain is not too steep.

Table 2 presents the spacing of broad-based dips as computed with the formula shown in the figure.

Close attention should be paid to construction of broad-based dips, as they are often made too small. Figure 3 shows minimum dimensions. Dips should be armored with crushed rock or gravel. Figure 4 shows a practical example of how a broad-based drainage dip can be used.

Figure 4—Drainage Dip

Transmission Construction Standard © 2008 by PacifiCorp. All rights reserved. Engineer (C. Wright): CLW Standards Manager (G. Lyons): GS	Roads—Water Bars and Water Dips	PACIFICORP A MIDAMERICAN ENERGY HOLDINGS COMPANY 7 Apr 08	TA 503 Page 3 of 4

Figure B-9b. Water Bars and Dips (TA 503, 3 of 3 pages)

2.5.2 Operations Access Roads

Transmission line access roads are necessary for access to, and maintenance of, transmission lines, structures or ancillary facilities, but they are not part of the public or federal network of roads. They are generally closed to the public and will be maintained by the Companies.

During routine operations, vehicular access will be needed to reach each structure for periodic inspections and maintenance and to areas of forest or tall shrubs to control vegetation in the ROW for safe operation. The Companies plan to employ live-line maintenance techniques on the transmission line (see Section 3.1.3 of this appendix). Live line maintenance and repair techniques require the utilization of high-reach bucket trucks and other trucks and equipment. Roads required as routine access roads for the operational life of the Project will be revegetated following construction but will not be recontoured; they will be maintained free of trees and shrubs for a minimum 8-foot width.

For non-routine maintenance requiring access by larger vehicles, the full width of the access road may be used. Roads will be repaired, as necessary, but will not be routinely graded. In order to preserve the ability to enter rapidly, the road structure (cuts and fills) will be left in place. In an emergency (i.e., in the event of a tower or conductor failure) full emergency access, including cranes and other heavy equipment, will be needed. Based on historical reliability of H-frame and lattice structures, it is anticipated that only a small fraction of the tower sites will require emergency access over the life of the Project.

Other roads may be travelled over by the Companies during operations. However, roads not classified as access roads will not be maintained by the Companies except as noted.

Roads not classified as access roads include:

- Public roads, including state highways and county roads: These roads are for public use, and the appropriate state or county entity maintains them.
- Open roads on federal land: The appropriate federal agency (typically BLM or Forest Service) maintains these roads, which are open to the public. These roads, including drainage features, cuts, and fill slopes, will be repaired by the Companies if damaged during O&M activities but not maintained on a routine basis.
- Closed federal land roads: These roads are still needed for administrative or emergency functions, but they have been closed to the public because of management policies to protect natural resources or reduce maintenance costs. If utilized during O&M activities, the Companies would assume some maintenance responsibilities proportionate to their use for O&M purposes.

2.5.3 Waterbody Crossings with Access Roads

Access roads will be constructed to minimize disruption of natural drainage patterns. Estimates of relative frequencies of crossing types and disturbance estimates for each are based on local engineering experience in Wyoming and Idaho. Each crossing will

be designed with the roads as advanced engineering is completed, and crossing disturbance will vary. However, these estimates are conservative and consistent across all alternatives. On all federally managed lands, the Companies will consult with the managing agency regarding relevant standards and guidelines pertaining to road crossing methods at waterbodies. Consultation includes site assessment, design, installation, maintenance, and decommissioning. Appendix I, Stream, Wetlands, Well and Spring Protection Plan, describes waterbody crossing types that will be used as part of the construction specifications. For EIS analysis purposes, three types of waterbody crossings as well as avoidance are considered as part of the Project (see Figures B-10 and B-11). They are:

- **Type 1—Drive through:** Crossing of a channel with only minimal vegetation removal and no cut or fill needed. This is typical for much of the low-precipitation sagebrush country with rolling topography and streams that rarely flow with water.
- **Type 2—Ford:** Crossing of a channel that includes grading and stabilization. Stream banks and approaches will be graded to allow vehicle passage and stabilized with rock or other erosion control devices. The stream bed will in some areas be reinforced with coarse rock material, where approved by the land-management agency, to support vehicle loads, prevent erosion and minimize sedimentation into the waterway. The rock will be installed in the stream bed such that it would not raise the level of the streambed, thus allowing continued movement of water, fish and debris. A ford crossing results in an average disturbance profile of 25 feet wide (along the waterbody) and 50 feet long (along the roadway) for 1,250 square feet or 0.03 acre at each crossing. Disturbance amount is estimated based on need to get equipment into the riparian area to build the 14-foot-wide travelway and protect it from erosion by adding armoring.
- **Type 3—Culvert:** Crossing of a waterbody that includes installation of a culvert and a stable road surface established over the culvert for vehicle passage. Culverts are designed and installed under the guidance of a qualified engineer who, in collaboration with a hydrologist and aquatic biologist where required by the land management agency, recommends placement locations; culvert gradient, height, and sizing; and proper construction methods. Culvert design considers bedload and debris size and volume. The disturbance footprint for culvert installation is estimated to be 50 feet wide (along the waterbody) and 150 feet long (along the road) for 7,500 square feet or 0.17 acre at each crossing. Ground-disturbing activities will comply with Agency-approved BMPs. Construction will occur during periods of low water or normal flow. The use of equipment in streams will be minimized. All culverts will be designed and installed to meet desired riparian conditions, as identified in applicable unit management plans. Culvert slope will not exceed stream gradient. Typically, culverts are partially buried in the streambed to maintain streambed material in the culvert. Sandbags or other non-erosive material are placed around the culverts to prevent scour or water flow around the culvert. Adjacent sediment control structures such as silt fences, check dams, rock armoring, or riprap may be necessary to prevent erosion or sedimentation. Stream banks and approaches may be stabilized with rock or other erosion control devices. Culverts will be inspected and maintained annually for the life of the Project (estimated at 50 years or longer) for proper operation and to protect water quality.

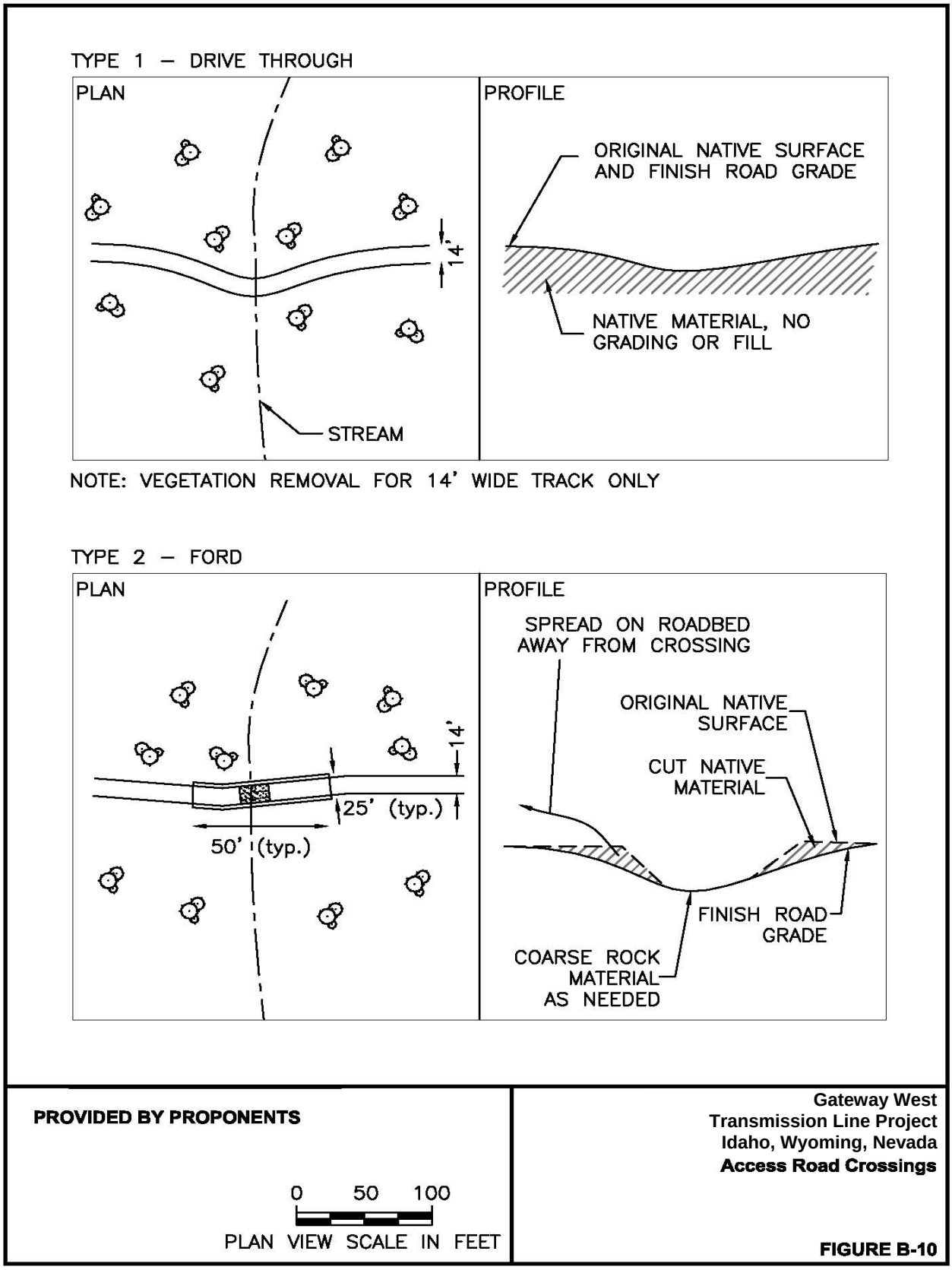

Figure B-10. Access Road Dry Crossings

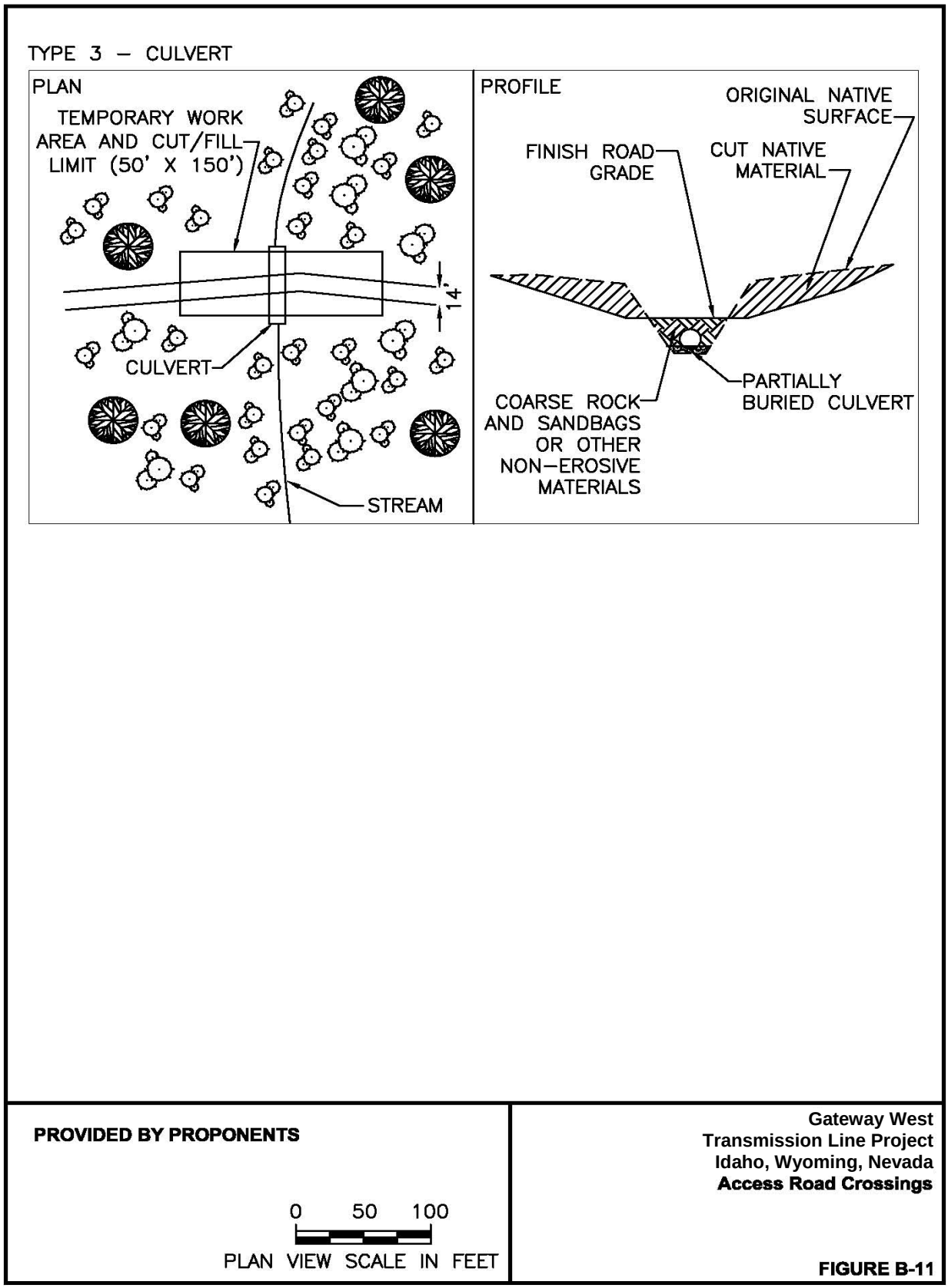

Figure B-11. Access Road Wet Crossings

- **Avoid Crossing:** Where constructing a new waterbody crossing is impractical or would require a bridge or a very large (>48-inch-diameter) culvert, existing waterbody crossings will be used and access redesigned to avoid a new crossing. All canals and ditches will be avoided by using existing crossings, as would all large perennial bodies like rivers.

The performance of low water stream crossings will be monitored for the life of the access road, and maintained or repaired as necessary to protect water quality.

2.5.4 Wetlands Crossings with Access Roads

During construction and for routine and emergency operations, access across wetlands to each structure location is necessary. Two methods of minimizing impact to wetlands were evaluated but are not proposed:

- Constructing at-grade roads with geotextiles and road materials which allow for water through-flow. This type of road would be below water during certain times of the year which would make locating the roads difficult, and the depth of the water over the drivable surface may make travel over the submerged road surface impractical or not feasible.
- Constructing using helicopters in wetlands. The single-circuit 500kV towers will be designed such that they can be erected by helicopter if needed. In each case, the use of ground based vehicles is still required, thus not eliminating the need for an access road to each structure to complete construction or during inspections and live-line maintenance activities.

A combination of methods for road construction in wetlands is proposed:

- Construction of permanent above-grade roads that will be utilized during construction, operation, and maintenance. This will typically entail placement of permanent fill in wetlands such that the travel surface would be higher in elevation than the ordinary high water level. The construction of above-grade access roads allows for the use of the types of equipment needed for construction, operation, maintenance; and for expedited access for emergency restoration throughout the year.
- Construction or use of temporary roads during construction, followed by restoration of the disturbance after construction. The Companies only propose this approach in the area of extensive wetlands in the Bear River Plain, in part because it is feasible to store the amount of matting needed for emergency access in the immediate vicinity. Smaller wetland and riparian area crossings will be constructed using permanent crossing methods because it would not be feasible to provide for temporary crossing materials for scattered crossings along a thousand miles of the Project. Where feasible in areas where temporary roads will be used, construction equipment may travel overland if the area is dry. If construction occurs when the ground is solidly frozen, ice roads could be constructed.

If construction must occur when the ground is wet, temporary matting materials will be installed to allow access for heavy vehicles and equipment. The mats typically come in

the form of heavy timbers bolted together. They are often used over a geotextile that is applied directly over the wet soil surface. When construction use is complete, the mats are removed and the geotextile taken up. This approach will be used where feasible, since it further reduces vegetation damage and compaction and reduces the time for full restoration. Mats spread the concentrated axle loads from equipment over a much larger surface area than the tires alone, thereby reducing the bearing pressure on fragile soils. Matting has a limited service life before replacement is required and must be stored for maintenance and emergency restoration activities. Table B-5 shows an estimate of miles of temporary roads for construction access in the three largest wetland areas crossed by the Proposed Route. Though exact locations may change during final design, the Companies are committed to using temporary crossings wherever feasible in these three important wetland areas.

Table B-5. Access Road Wetland Crossings in the Bear River Plain

Location	Segment 4 Mileposts	Approximate Miles			
		Total New or Improved Access Roads	New or Improved Access Road in Uplands	Proposed for Permanent Fill in Wetlands	Proposed for Temporary Access in Wetlands
Cokeville	123.0-126.8	2.2	1.3	0.0	0.9
Bear River	133.5-134.5	1.8	0.0	0.0	1.8
Montpelier	148.0-153.6	7.9	5.1	0.0	2.8

Where temporary road access is utilized, road areas will be rehabilitated after construction. Any geotextiles and matting used will be removed and wetland vegetation allowed to return. No permanent roads will be available for routine operations inspections or repairs. Operational inspections and repairs will be scheduled for times when the ground is dry or frozen and access will be overland along the road alignment by ATV. Emergency repairs requiring heavy equipment will access the damaged area using matting if necessary. After emergency repairs are completed, matting will be removed and the wetland areas allowed to restore naturally.

Waterbody and wetland disturbances will be conducted under the terms of a USACE CWA Section 404 permit, the NPDES Construction Stormwater Permit (CWA 402), and State 401 water quality certification requirements governing activities within waters of the United States. In Idaho, there is an additional requirement for a stream channel alteration permit for activities in stream beds.

2.6 Substations

The Project includes three proposed substations and expansion at nine existing substations.

2.6.1 Substation Components

The following sections describe key components of substations.

2.6.1.1 Bay

A substation “bay” is the physical location within a substation fenced area where the high-voltage circuit breakers and associated steel transmission line termination structures, high-voltage switches, bus supports, controls, and other equipment are

installed. For each transmission line, 500-kV, 345-kV, and 230-kV circuit breakers, high-voltage switches, bus supports, and transmission line termination structures are typically installed. The 500-kV transmission line termination structures are approximately 125 to 135 feet tall. Additional equipment including 500/230-kV or 500/345-kV transformers and 500-kV shunt reactors (which resemble a transformer in appearance), and 230-kV shunt capacitor banks will be installed.

The appearance of the new and expanded substations is similar to the appearance of the existing substations. The tallest structures in the substations are the 500-kV, 345-kV, and 230-kV dead-end structures, which vary in height from approximately 70 feet (230 kV) to 125 to 135 feet (500 kV), and/or a microwave antenna tower, which would be in the range of 100 feet or more, depending on the height needed to maintain line of sight to the nearest microwave relay site. Figure B-12 includes a perspective sketch and an elevation view illustrating the appearance of a typical 500-kV substation with multiple line connections.

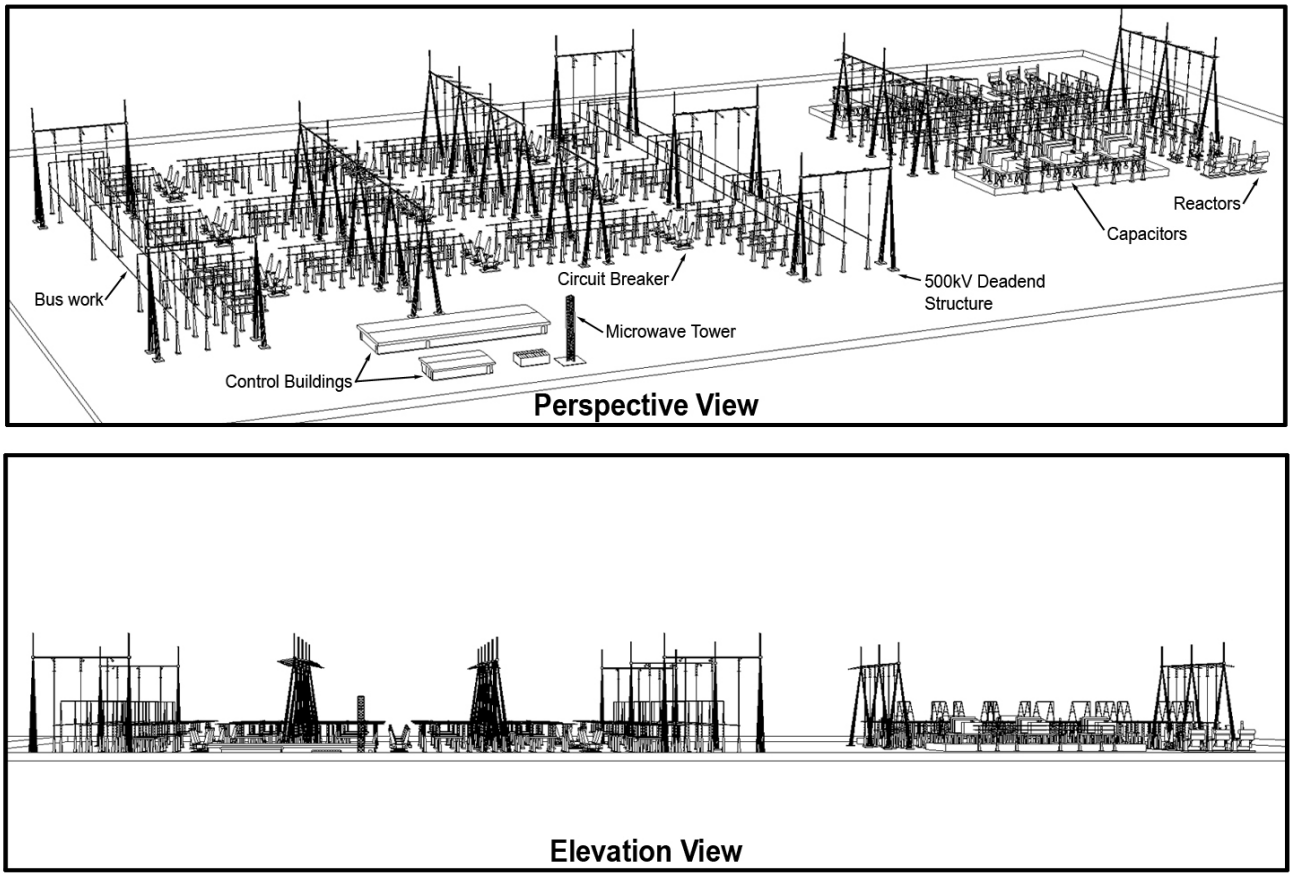

Figure B-12. Typical 500-kV Substation

2.6.1.2 Access Road

Permanent all-weather access roads are required at substation sites to provide access for personnel, material deliveries, vehicles, trucks, heavy equipment, low-boy tractor trailer rigs (used for moving large transformers), and ongoing maintenance activities at each site. Substation access roads are normally well-compacted, graded gravel roads approximately 20 feet in width with a minimum 110-foot turning radius to accommodate the delivery of large transformers to the site. A new access road of less than 1 mile will be developed from the public road to the Anticline Substation. Access to the Aeolus Substation requires an upgrade of a portion of CR 121. Access roads are in place for all other substation locations.

2.6.1.3 Control Building

One or more control buildings are required at each substation to house protective relays, control devices, battery banks for primary control power, and remote monitoring equipment. The size and construction of the building depends on individual substation requirements. Typically, the control building is constructed of concrete block, pre-engineered metal sheathed, or composite surfaced materials. Special control buildings may be developed within the substation developments to house other control and protection equipment. For example, at Aeolus a static var compensation (SVC) building will be developed to protect power electronic equipment, controls, and cooling equipment.

2.6.1.4 Fencing and Landscaping

Security fencing will be installed around the entire perimeter of each new or expanded substation to protect sensitive equipment and prevent accidental contact with energized conductors by third parties. This 7-foot-high fence is constructed of chain link with steel posts, with one foot of barbed wire above the chain link, and with locked gates. If required by the landowner or permitting agency, landscaping will be established using drought-resistant vegetation where allowed.

2.6.2 Distribution Supply Lines

Station service power is required at each substation or regeneration station. Typically, station service power is provided from a local electric distribution line, located in proximity to the substation or regeneration station. The voltage of the distribution supply line is typically 34.5 kV or lower and carried on wood poles. For new sites, it will be necessary to extend the electric distribution line from a suitable take-off point on an existing distribution line to the new substation site. The location and routing of the existing distribution lines to the new substation sites is determined during the final design process. For Gateway West, new distribution line extensions to provide station service power are anticipated for the Anticline, Cedar Hill Substation and Aeolus substations. The distance between existing distribution supply and the substations ranges from 200 feet to 11 miles. The remaining substation locations are at existing station sites and new distribution line extensions to provide station service power will not be required. However, modifications to the existing distribution facilities may be necessary to provide increased capacity to support the expansions at the existing substation sites.

3.0 SYSTEM CONSTRUCTION

The following section and subsections detail construction activities for the Project, including transmission line, substation communication, and associated ancillary features.

3.1 Land Requirements and Disturbance

3.1.1 Right-of-Way Width

The Companies propose to acquire a permanent 250-foot-wide ROW for the 500-kV single-circuit sections of the Project, a 150-foot-wide ROW for 345-kV single-circuit sections of the Project, and a 125-foot-wide ROW for the 230-kV single-circuit sections of the Project. However, in the isolated situation where spans between structures significantly exceed the typical span lengths anticipated (up to 1,200 feet or 1,800 feet depending on voltage and standard ROW width), the ROW width may need to be increased to provide appropriate clearance from conductors blown toward the ROW edge. Figures B-4 through B-5 illustrate the ROW width requirements. The determination of these widths is based on two criteria:

- Sufficient clearance must be maintained during a high wind event when the conductors are blown towards the ROW edge.
- Sufficient room must be provided within the ROW to perform transmission line maintenance. See Section 3.1.2 of this appendix for details of maintenance requirements.

During construction, temporary permission will be required from landowners and land management agencies for off-ROW access, multi-purpose yards, helicopter fly yards, and material storage. During operation, Project land requirements will be restricted to the ROW, including access roads, substations, and communication facilities. Access to the ROW (including off-ROW access roads) will be in accordance with the land rights obtained as part of the easement acquisition process. Off-ROW access roads will be used where permitted for operations as well as construction. As further details of the final Project design are engineered, the amount of land required may change.

3.1.2 Right-of-Way Acquisition

All segments must obtain new ROWs through a combination of ROW grants and easements negotiated between the Companies and various federal, state, and local governments; other companies (e.g., utilities and railroads); and private landowners.

Close coordination with all property owners and land agencies during surveys and the construction phase of the Project is essential for successful completion of the Project. In the early stages of the Project, landowners were contacted to obtain right-of-entry for surveys and for geotechnical drilling at selected locations. Additional landowners will be contacted as needed throughout the project for additional surveys, including geotechnical work. Each landowner along the final centerline route will be contacted to explain the Project and to secure right-of-entry and access to the ROW.

Table B-6. Summary of Land Required for Construction and Operations

Segment	Land Required for Construction (acres) [1/, 2/]	Land Required for Operations (acres) [1/]
Segment 1W(a) – Windstar to Aeolus (230-kV Line)		
T-Line ROW (including Off ROW Wire Pulling/ Splicing Sites)	1,168	1,117
Off-ROW Multi-purpose yard	–	–
Off-ROW Fly Yards	–	–
Off-ROW Access Roads	352	107
OPGW Regeneration Station(s) - 1	1	0.5
Windstar and portion of Aeolus Substations	35	35
Segment Subtotal	***1,556***	***1,260***
Segment 1W(c) – Dave Johnston to Aeolus (230-kV Reconstruction)		
T-Line ROW (including Off ROW Wire Pulling/ Splicing Sites)	1,170	1,114
Off-ROW Multi-purpose yard	30	–
Off-ROW Fly Yards	307	–
Off-ROW Access Roads	155	47
OPGW Regeneration Station(s) - 0	–	–
Heward and portion of Aeolus Substations	37	30
Segment Subtotal	***1,699***	***1,191***
Segment 2 – Aeolus to Creston		
T-Line ROW (including Off ROW Wire Pulling/ Splicing Sites)	2,942	2,776
Off-ROW Multi-purpose yard	60	–
Off-ROW Fly Yards	240	–
Off-ROW Access Roads	419	128
OPGW Regeneration Station(s) - 1	1	0.5
Portion of Aeolus Substation	60	50
Segment Subtotal	***3,722***	***2,955***
Segment 3 – Creston to Anticline		
T-Line ROW (including Off ROW Wire Pulling/ Splicing Sites)	1,459	1,392
Off-ROW Multi-purpose yard	40	–
Off-ROW Fly Yards	112	–
Off-ROW Access Roads	143	44
OPGW Regeneration Station(s) - 1	1	0.5
Portion of Anticline Substation	45	40
Segment Subtotal	***1,800***	***1,477***
Segment 3A – Anticline to Bridger		
T-Line ROW (including Off ROW Wire Pulling/ Splicing Sites)	97	93
Off-ROW Multi-purpose yard	–	–
Off-ROW Fly Yards	12	–
Off-ROW Access Roads	12	4
OPGW Regeneration Station(s) - 0	0	0
Jim Bridger 345-kV and portion of Anticline Substations	40	40
Segment Subtotal	***161***	***137***

Table B-6. Summary of Land Required for Construction and Operations (continued)

Segment	Land Required for Construction (acres) [1/, 2/]	Land Required for Operations (acres) [1/]
Segment 4 – Anticline to Populus		
T-Line ROW (including Off ROW Wire Pulling/ Splicing Sites)	6,325	5,983
Off-ROW Multi-purpose yard	120	
Off-ROW Fly Yards	554	
Off-ROW Access Roads	997	307
OPGW Regeneration Station(s) - 3	3	1.5
Portions of Anticline and Populus Substations	105	97
Segment Subtotal	***8,104***	***6,389***
Segment 5 – Populus to Borah		
T-Line ROW (including Off ROW Wire Pulling/ Splicing Sites)	1,799	1,682
Off-ROW Multi-purpose yard	40	
Off-ROW Fly Yards	171	
Off-ROW Access Roads	263	80
OPGW Regeneration Station(s) - 0	0	0
Portions of Populus and Borah Substations	50	44
Segment Subtotal	***2,323***	***1,806***
Segment 6 – Borah to Midpoint		
T-Line ROW (including Off ROW Wire Pulling/ Splicing Sites)	17	17
Off-ROW Multi-purpose yard	Multi-purpose yards from adjacent segments will be used.	–
Off-ROW Fly Yards	Fly yards from adjacent segments will be used.	–
Off-ROW Access Roads	Minimal roads will be required around substations for required work.	–
OPGW Regeneration Station(s) - 0	0	–
Portions of Borah and Midpoint Substations	35	31
Segment Subtotal	***52***	***48***
Segment 7 – Populus to Cedar Hill		
T-Line ROW (including Off ROW Wire Pulling/ Splicing Sites)	3,795	3,571
Off-ROW Multi-purpose yard	56	–
Off-ROW Fly Yards	398	–
Off-ROW Access Roads	367	112
OPGW Regeneration Station(s) - 2	2	1
Portions of Populus and Cedar Hill Substations	52	45
Segment Subtotal	***4,670***	***3,729***
Segment 8 – Midpoint to Hemingway		
T-Line ROW (including Off ROW Wire Pulling/ Splicing Sites)	4,230	3,982
Off-ROW Multi-purpose yard	100	–
Off-ROW Fly Yards	487	–
Off-ROW Access Roads	323	99
OPGW Regeneration Station(s) - 2	2	1
Portion of Midpoint Substation	15	13
Segment Subtotal	***5,157***	***4,095***

Table B-6. Summary of Land Required for Construction and Operations (continued)

Segment	Land Required for Construction (acres) 1/, 2/	Land Required for Operations (acres) 1/
Segment 9 – Cedar Hill to Hemingway		
T-Line ROW (including Off ROW Wire Pulling/ Splicing Sites)	5,229	4,916
Off-ROW Multi-purpose yard	120	–
Off-ROW Fly Yards	563	–
Off-ROW Access Roads	663	203
OPGW Regeneration Station(s) - 3	3	1.5
Portion of Cedar Hill Substation	22	18
Segment Subtotal	***6,600***	***5,139***
Segment 10 – Midpoint to Cedar Hill		
T-Line ROW (including Off ROW Wire Pulling/ Splicing Sites)	1,122	1,030
Off-ROW Multi-purpose yard	20	–
Off-ROW Fly Yards	120	–
Off-ROW Access Roads	50	15
Off-ROW Crossings	–	–
OPGW Regeneration Station(s) - 0	–	–
Portions of Midpoint and Cedar Hill Substations	36	31
Segment Subtotal	***1,348***	***1,076***
Total Project		
T-Line ROW (including Off ROW Wire Pulling/ Splicing Sites)	29,353	27,673
Off-ROW Multi-purpose yard	586	–
Off-ROW Fly Yards	2,964	–
Off-ROW Access Roads	3,744	1,146
OPGW Regeneration Station(s) - 13	13	6.5
Substation	532	464
Total Project	***37,192***	***29,290***

1/ The exact land requirements will depend on the final detailed design of the transmission line, which is influenced by the terrain, land use, and economics. Alignment options may also slightly increase or decrease these values.
2/ Acreages in table are rounded to the nearest acre; columns therefore may not sum exactly.
3/ Values are given in 0.5-acre increments because regeneration sites are typically 0.5 acre each.
Assumptions/Notes:
1. ROW width for 500-kV single circuit segments is 250 feet. The ROW width for 230-kV H-frame segments is 125 feet and for 345-kV H-frame on 3A is 150 feet. The dimensions of the tower construction pads and area permanently occupied by towers after restoration are based on the dimensions specified in Table B-1.
2. The multi-purpose yards will serve as field offices, reporting locations for workers, parking space for vehicles and equipment, sites for material storage, fabrication assembly and stations for equipment maintenance, and concrete batch plants.
3. Multi-purpose yards will be approximately 20 acres for 500 kV and 10 acres for 230 kV. They will be located at each end of a segment, and every 20 to 30 miles along the line.
4. Fly yards will be 10 to 15 acres located approximately every 5 miles. Values in table assume helicopter construction for all segments. The construction contractor may choose to construct using ground-based techniques, therefore not utilizing fly yards.
5. For 500-kV, wiring pulling/splicing sites will be the ROW width x 700 feet located approximately every 9,200'; for 230-kV and 345-kV, ROW width x 400 feet located every 9,200 feet. Typically, only sites that would be off of the ROW would be at large angle dead-ends. It is estimated that one in four sites will be off of the ROW.
6. Refer to Table B-9 for access road mileages for each segment.

All negotiations with landowners are conducted in good faith, and the Project's effect on the parcel or other concerns the landowner may have will be addressed. ROWs for transmission line facilities on private lands are obtained as perpetual easements. Land for substation or regeneration stations is obtained in fee simple where located on private land. A good faith effort will be made to purchase the land and/or obtain easements on private lands through reasonable negotiations with the landowners.

Chapter 1, Section 1.3.3.3 describes NERC and WECC reliability standards and capacity needs for Gateway West. To receive a rating from WECC that allows for the capacity needed to serve present and future loads within the Companies' service areas, the Gateway West transmission lines must be located at least 1,500 feet from the nearest existing 230 kV or higher-voltage transmission lines and is being designed to be located the maximum span distance away when adjacent to longer spans. Land between ROWs that are separated to meet reliability criteria would not be encumbered with an easement but could practically be limited in land uses due to the proximity of two or more large transmission lines.

3.1.3 Land Disturbance

Land disturbance as described in Table B-7 is the estimated amount of land that will be disturbed during construction or required to be permanently converted to operational uses. These uses are less than the amount of land for which operational controls are required over the life of the Project as described in Table B-6.

Estimates for construction disturbances are based on best professional judgment and experience with this type of project. Estimates were made of disturbance areas resulting from each construction activity involving structure placement, access roads, yards, and new and expanded substations. Sections 2.2 through 2.4 of this appendix describe typical disturbance areas for each construction activity.

3.2 Transmission Line Removal (Segment 1W(c) only)

3.2.1 Access for Removal

In order to construct Segment 1W(c), the existing 230kV transmission line must be removed between the existing Dave Johnston Power Plant substation and the proposed Aeolus Substation. This line will be replaced in its entirety, including structures. Section 3.3, below, details the construction of the new transmission line.

Existing access roads or overland travel, including the roads and trails used for construction, maintenance and inspection of the line, will be used to remove the existing line. All roads or access ways or required disturbance areas utilized for line removal work will be surveyed, cleared and staked prior to any construction. On completion of line removal work, all access or spur roads shall be removed in their entirety and in accordance with project requirements and restrictions.

3.2.2 Site Preparation

In general, the existing pads surrounding existing structures are sufficient to allow access for the bucket trucks and small cranes needed to remove the structures. If needed, vegetation on the existing pads may be cut or crushed to allow safe equipment access. Grading will only be used if essential for worker safety. Erosion control

Table B-7. Summary of Land Disturbance Resulting from Construction and Operations

Segment/Project Component	Land Affected During Construction (acres) [1/, 2/]	Land Affected During Operations (acres) [1/]
Segment 1W(a)		
One Single-Circuit Tower 230-kV Pad	229	5
Dead-end Angle 230-kV Pulling Sites	44	–
Existing Roads, Needing Improvement	288	89
New Access Roads	177	63
Fly Yards	–	–
OPGW Regeneration Station – 1	1	0.5
Single Circuit Pulling-Tensioning 230-kV	13	–
Multi-Purpose Yards 230-kV	–	–
Portion of Windstar and Aeolus Substations	35	25
Segment 1W(a) Subtotal	***787***	***182***
Segment 1W(c)		
One Single-Circuit Tower 230-kV Pad	236	5
Dead-end Angle 230-kV Pulling Sites	50	
Existing Roads, Needing Improvement	219	74
New Access Roads	72	25
Fly Yards	312	–
OPGW Regeneration Station – 0	–	–
Single-Circuit Pulling-Tensioning 230-kV	14	–
Multi-Purpose Yards 230-kV	30	–
Heward Substation & portion of Aeolus Substation	37	30
Segment 1W(c) Subtotal	***970***	***134***
Segment 2		
One Single--Circuit Tower 500k-V Pad	560	22
Dead-end Angle Pulling Single--Circuit 500-kV	200	–
Existing Roads, Needing Improvement	340	105
New Access Roads	208	73
Fly Yards	250	–
OPGW Regeneration Station – 1	1	0.5
Single-Circuit Pulling-Tensioning 500-kV	112	–
Multi-Purpose Yards 500-kV	60	–
Portion of Aeolus Substation	60	50
Segment 2 Subtotal	***1,791***	***250***
Segment 3		
One Single--Circuit Tower 500-kV Pad	278	11
Dead-end Angle Pulling Single--Circuit 500-kV	48	
Existing Roads, Needing Improvement	65	20
New Access Roads	136	46
Fly Yards	112	
OPGW Regeneration Station – 1	1	0.5
Single-Circuit Pulling-Tensioning 500-kV	85	
Multi-Purpose Yards 500-kV	40	
Portion of Anticline Substation	45	40
Segment 3 Subtotal	***810***	***118***
Segment 3A		
One Single-Circuit Tower 345-kV Pad	13	–
Dead-end Angle Pulling Single-Circuit 345-kV	7	–
Existing Roads, Needing Improvement	1	–
New Access Roads	16	5
Fly Yards	12	–
OPGW Regeneration Station – 0	–	–
Single-Circuit Pulling-Tensioning 345-kV	–	–
Multi-Purpose Yards 500-kV	–	–

Table B-7. Summary of Land Disturbance Resulting from Construction and Operations (continued)

Segment/Project Component	Land Affected During Construction (acres) [1/, 2/]	Land Affected During Operations (acres)
Segment 3A (continued)		
Jim Bridger 345-kV and portion of Anticline Substations	40	40
Segment 3A Subtotal	***89***	***45***
Segment 4		
One Single-Circuit Tower 500-kV Pad	1,229	49
Dead-end Angle Pulling Single-Circuit 500-kV	324	–
Existing Roads, Needing Improvement	663	204
New Access Roads	550	186
Fly Yards	562	–
OPGW Regeneration Station – 3	3	1.5
Single-Circuit Pulling-Tensioning 500-kV	346	–
Multi-Purpose Yards 500-kV	120	–
Portion of Anticline and Populus Substations	105	97
Segment 4 Subtotal	***3,902***	***538***
Segment 5		
One Single-Circuit Tower 500-kV Pad	353	14
Dead-end Angle Pulling Single-Circuit 500-kV	138	–
Existing Roads, Needing Improvement	198	61
New Access Roads	140	49
Fly Yards	175	–
OPGW Regeneration Station – 0	–	–
Single-Circuit Pulling-Tensioning 500-kV	85	–
Multi-Purpose Yards 500-kV	40	–
Portion of Populus and Borah Substations	50	44
Segment 5 Subtotal	***1,179***	***169***
Segment 6		
Portion of Borah and Midpoint Substations	35	31
Substation Additional Disturbance	17	17
Segment 6 Subtotal	***52***	***48***
Segment 7		
One Single-Circuit Tower 500-kV Pad	751	30
Dead-end Angle Pulling Single-Circuit 500-kV	227	–
Existing Roads, Needing Improvement	270	85
New Access Roads	300	107
Fly Yards	400	–
OPGW Regeneration Station – 2	2	1
Single-Circuit Pulling-Tensioning 500-kV	193	–
Multi-Purpose Yards 500-kV	60	–
Portion of Populus and Cedar Hill Substation	52	45
Segment 7 Subtotal	***2,255***	***268***
Segment 8		
One Single-Circuit Tower 500-kV Pad	825	33
Dead-end Angle Pulling Single-Circuit 500-kV	255	–
Existing Roads, Needing Improvement	310	96
New Access Roads	277	106
Fly Yards	512	–
OPGW Regeneration Station – 2	2	1
Single-Circuit Pulling-Tensioning 500-kV	221	–
Multi-Purpose Yards 500-kV	100	–
Portion of Midpoint Substation	15	13
Segment 8 Subtotal	***2,517***	***249***

Table B-7. Summary of Land Disturbance Resulting from Construction and Operations (continued)

Segment/Project Component	Land Affected During Construction (acres) [1/, 2/]	Land Affected During Operations (acres)
Segment 9		
One Single-Circuit Tower 500-kV Pad	1,016	41
Dead-end Angle Pulling Single-Circuit 500-kV	337	–
Existing Roads, Needing Improvement	562	175
New Access Roads	355	128
Fly Yards	612	–
OPGW Regeneration Station – 3	3	1.5
Single-Circuit Pulling-Tensioning 500-kV	270	–
Multi-Purpose Yards 500-kV	120	–
Portion of Cedar Hill Substation	22	18
Segment 9 Subtotal	***3,297***	***364***
Segment 10		
One Single-Circuit Tower 500-kV Pad	225	9
Dead-end Angle Pulling Single-Circuit 500-kV	117	–
Existing Roads, Needing Improvement	61	19
New Access Roads	45	17
Fly Yards	125	–
OPGW Regeneration Station – 0	–	–
Single-Circuit Pulling-Tensioning 500-kV	46	–
Multi-Purpose Yards 500-kV	20	–
Portion of Midpoint Substation and Cedar Hill Substations	36	31
Segment 10 Subtotal	***675***	***76***
Project Totals		
Pads (including Segment 6)	5,732	237
Deadend Pulling	1,747	–
Existing Road - Improved	2,977	928
New Road	2,276	805
Fly Yard	3,072	
Regeneration Site – 13	13	6.5
Pulling-Tensioning	1,385	
Multi-purpose yard	590	
Substations	532	464
Grand Total	**18,324**	**2,441**

1/ The exact land requirements will depend on the final detailed design of the transmission line, which is influenced by the terrain, land use, and economics. Alignment options may also slightly increase or decrease these values.
2/ Acreages in table are rounded to the nearest acre; columns therefore may not sum exactly.
3/ Values are given in 0.5-acre increments because regeneration sites are typically 0.5 acre each.
Assumptions/Notes:
1. ROW width for 500-kV single circuit segments is 250 feet, for the 345-kV H-Frame segment 150 feet, and for 230-kV H-frame segments is 125 feet.
2. The multi-purpose yards will serve as field offices, reporting locations for workers, parking space for vehicles and equipment, sites for material storage, fabrication assembly and stations for equipment maintenance, and concrete batch plants.
3. Multi-purpose yards will be approximately 20 acres for 500-kV and 10 acres for 230-kV. They will be located at each end of a segment, and every 20 to 30 miles along the line.
4. Fly yards will be 10 to 15 acres located every 5 miles. Values in table assume helicopter construction throughout all single-circuit 500-kV and 230 kV-segments. The construction contractor may choose to construct using ground-based techniques, therefore not utilizing fly yards.
5. For 500- kV, wiring pulling/splicing sites will be the ROW width x 700 feet located every 9,200 feet; for 230-kV and 345-kV, ROW width x 400 feet located every reel length or approximately 9,200 feet. Typically, only sites that would be off of the ROW would be at large angle dead-ends. It is estimated that one in four sites will be off of the ROW.
6. Refer to Table B-9 for access road mileages for each segment.

measures as specified in the SWPPP and Appendix Z of this POD will be employed where needed.

3.2.3 Remove Conductors

The next step after establishment of access and a safe work area for the lineworkers is to remove the conductors and shield wire. To remove the conductors, the line is taken out of service. Bucket trucks are generally used to hoist the workers to the wire positions to allow workers to remove the hardware holding the wires in place, and drop the wires to the ground. In some cases workers may climb the structures to accomplish this. A wire spooling machine is attached to one end of each wire after the wires are all on the ground. Each wire is wound onto reels to be hauled to one of the designated multi use yards, or to an approved offsite disposal area.

Where wires to be removed cross over other energized lines, guard equipment or structures are used to prevent the wires being removed from coming in contact with the energized wires (utilizing the same process as used when installing new wires).

3.2.4 Remove Structures

Structure removal follows wire removal. In most cases, a 20-30T lift capacity crane attaches to the structure upper section and holds it in place while the poles are cut off near ground and the structure is laid to the ground for disassembly. In a few instances, workers in bucket trucks or climbing remove the insulators, hardware, braces and crossarms in the air and lower them to the ground, leaving the poles standing. Once all the equipment has been removed, the poles are cut off near ground and allowed to fall (or may be supported by crane and lowered to ground).If there are any guy wires and anchors they will be removed at this time as well. All materials are loaded onto trucks and hauled to a multi-purpose yard or to a preapproved disposal site. Any treated wood that is or given away to an outside party will be accompanied by a Bill of Sale and Consumer Information Sheets that describe any health and environmental risks associated with different types of treated wood (i.e. proper and improper uses).

3.2.5 Site Reclamation

After conductors, structures, and associated hardware have been removed, workers dig out around the base of the remaining pole section and cut off the pole below ground. The resulting holes are filled and compacted with soils that have been approved for backfill and from approved sources if not available on-site. The final step is to remove and restore work areas, pads, and other disturbed areas to a condition agreed upon by the landowner, tenant or managing agency. Appendix D of this POD, the Reclamation Plan, and Appendix Z, Mitigation Measures, contain the plans and requirements for site restoration and reclamation.

3.3 Transmission Line Construction

The following sections detail the transmission line construction activities and procedures for Gateway West. Construction equipment and work force requirements are described in Section 2.6. Figure B-13 illustrates the transmission line construction sequence. Substation construction is described in Section 2.4 of this appendix. Various construction activities will occur during the process, with several crews operating

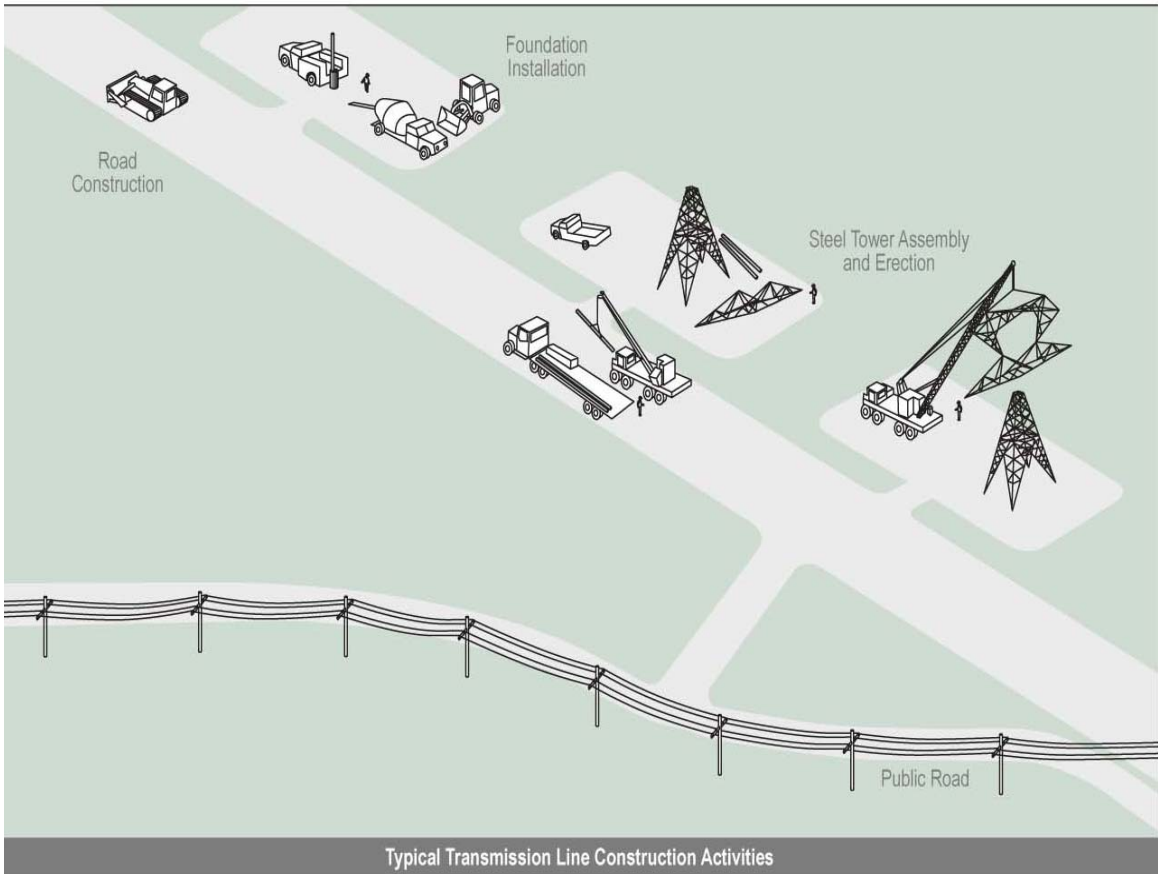

Figure B-13. Transmission Line Construction Sequence

simultaneously at different locations. The proposed construction schedule is described in Section 3.6.4 of this appendix.

For the entire Proposed Route, 990 miles of transmission lines and associated support structures will be constructed, including 74 miles to be reconstructed. Of this total, 837.9 miles will be constructed using 500-kV structures. Approximately 147.4 miles will be constructed using 230-kV steel H-frame structures and approximately 5.1 miles will be 345-kV construction between the proposed Anticline Substation and the expansion of the existing 345-kV substation at the Jim Bridger Power Plant.

3.3.1 Transmission Line System Roads

Construction of the new 230-kV, 345-kV, and 500-kV transmission lines will require vehicle, truck, and crane access to each new structure site for construction crews, materials, and equipment. Similarly, construction of other Project components such as yards and substation sites will require vehicle access.

Transmission line ROW access will be a combination of new access roads, improvements to existing roads, and use of existing roads as is. New access roads or improvements to existing access roads will be constructed using a bulldozer or grader, followed by a roller to compact and smooth the ground. Front-end loaders will be used to move the soil locally or off site. Typically, access to the transmission line ROW and tower sites requires a 14-foot-wide travel way for straight sections of road and a 16- to

20-foot-wide travel way at corners to facilitate safe movement of equipment and vehicles. Wherever possible, new access roads will be constructed within the proposed transmission line ROW, or existing roads will be used. In other cases, access roads will be required between the proposed transmission line and existing roads. Erosion control and sedimentation measures such as at-grade water bars, culverts, sediment basins, or perimeter control will be installed as required to minimize erosion during and subsequent to construction of the Project.

On level terrain where underlying soils conditions are suitable, road construction may only require back-dragging a blade to remove brush to facilitate construction. In the 2010 POD, we estimated the average disturbance across the entire project due to access road construction to be 16 feet wide. Upon more careful evaluation of the side slopes these roads do or will cross, we have revised that estimate to 24 feet as an average across the approximately 1,000 miles of the proposed route.
This average was estimated based on the assumption that the travelway will be 14 feet wide for straight segments of the road and 16 to 20 feet wide in turns. To achieve this travelway width, a variable amount of disturbance, including cuts and fills, ditching, and other drainage will occur. The steeper the side slope, the larger the disturbance width, because the cuts (into the bank above the road) and fills (compacted material forming the support for the travelway below the road) need to be sloped away from the road to be stable, depending on the parent material and soil type crossed. Where the road curves on steeper ground to follow topography or uses switchbacks to ascend a hill, the wider travelway (16 – 20') is required to accommodate the heavy equipment used during construction. Table B-8, below, summarizes the assumed average road widths for various side slope classes.

Table B-8. Slope Class and Estimated Average Road Width

Slope Class (% slope)	Average Estimated Road Disturbance for Construction (feet)	% of Proposed Route that Crosses This Slope Class	Weighted Relative Road Width (feet)
0-5	18	53	9
5-10	20	20	4
10-20	30	15	4
>20	50	12	6
Average			24

After Project construction, existing and new permanent access roads will be used by maintenance crews and vehicles for inspection and maintenance activities. New roads created to access tower sites will be revegetated but not restored to original contours to allow for emergency access to the tower location and for periodic inspection and maintenance activities. Temporary construction roads not required for future maintenance access will be reclaimed and restored to as similar to original contours as practicable after completion of Project construction. For example, access roads to yards will not be required once the yard is regraded and vegetated. Gates will be installed as required to restrict unauthorized vehicular access to the ROW. Roads retained for operations will be seeded with a grass mix and allowed to revegetate. For normal maintenance activities, an 8-foot portion of the road will be used and vehicles would drive over the vegetation. For non-routine maintenance requiring access by

larger vehicles, the full width of the access road may be used. Access roads will be repaired, as necessary, but not be routinely graded. Vegetation (e.g., taller shrubs and trees) that may interfere with the safe operation of equipment will be managed on a cyclical basis.

Table B-9 lists the estimated miles of proposed access roads by segment based on preliminary engineering.

Table B-9. Miles of New and Improved Access Roads[1/]

Segment	New Access Roads		Existing Access Roads to be Improved		Totals	
	Miles	Acres[2/]	Miles	Acres[2/]	Miles	Acres[2/]
Segment 1W(a)	64.8	177	91.6	288	156.4	465
Segment 1W(c)	26.1	72	76.5	219	102.6	291
Segment 2	75.6	208	107.7	340	183.3	548
Segment 3	48.0	136	20.7	65	68.7	201
Segment 3A	5.3	16	0.4	<1	5.7	17
Segment 4	192.4	550	210.7	663	403.1	1,213
Segment 5	51.8	140	63.1	198	114.9	338
Segment 6[3/]	–	–	–	–	–	–
Segment 7	113.2	300	87.6	270	200.8	570
Segment 8	112.7	277	98.7	310	211.4	587
Segment 9	135.5	355	180.1	562	315.6	917
Segment 10	18.5	45	20.1	61	38.6	106
Total	844	2,276	957	2,977	1,801	5,253

1/ Includes on- and off-ROW access roads outside the disturbance of the tower pads, pulling and tensioning sites, and on-ROW fly yards.
2/ Acreages in table are rounded to the nearest acre and were calculated based on an average 26-foot width; column therefore may not sum exactly.
3/ The disturbance for new or improved access roads for Segment 6 is accounted for under tower disturbance calculation in Table B-7.

3.3.2 Soil Borings

At the discretion of the Companies, soil borings will be completed along the route to determine depth to bedrock and the engineering properties of the soil. Based on the soil properties, foundation designs will be completed for transmission line towers and other structures. Borings will be made with truck- or track-mounted equipment. The borings are approximately 4 inches in diameter, range from 15 to over 60 feet deep, and be backfilled with the excavated material upon completion of soil sampling.

3.3.3 Multi-Purpose Yards

Construction of Gateway West will begin with the establishment of multi-purpose yards (yards). Yards, about 20 acres each for 500-kV construction and 10 acres each for 230-kV construction, are typically located approximately every 20 to 30 miles along or in proximity to the route. Because Segment 3A, the only portion of 345kV line, is only 5.1 miles long, it will utilize one of the substations or existing yards established for Segments 3 or 4. Where feasible, yards are located near a distribution power source, where public services such as water are available, along well-improved and maintained county roads, and near or on road types that can support the amount and type of traffic needed during the construction process.

The yards serve the following functions:

- Material storage yards (sites for material and equipment storage)
- Structure work sites (where structures to be transported to their installation sites can be partially or completely assembled in advance)
- Concrete batch plant locations or sites
- Show up yards (reporting locations for workers and parking space for vehicles)
- Staging yards (locations where materials from larger storage areas can be assembled for a particular task)
- Laydown yards
- Temporary use yards
- Temporary work areas (including but not limited to vehicle and equipment maintenance)

3.3.4 Fly Yards

Helicopter Fly Yards (Fly Yards) may be located approximately every 5 miles along the route where helicopter construction is planned, and occupy approximately 10 to 15 acres. These yards are generally more temporary in nature than multi-purpose yards and are located along the project ROW when feasible and terrain is suited. Generally the fly yard does not require the same level of access or services as the multi-purpose yard, as the bulk of their intended use is for temporary staging, assembling, and then flying out of products or completed assemblies. However, all activities listed above for multi-purpose yards may occur in a fly yard, but at a smaller scale in comparison.

When necessary, multi-purpose yards and helicopter fly yards will be fenced and their gates locked. Security guards will be stationed where needed. Yard locations will be finalized following discussion with the land management agency or negotiations with landowners. In some areas, the yard may need to be scraped by a bulldozer and a temporary layer of rock laid to provide an all-weather surface. Unless otherwise directed by the landowner or land manager, the rock will be removed from the yard upon completion of construction and the area will be restored.

Table B-10 lists the frequency and estimated acreage disturbance for multi-purpose yards and helicopter fly yards by segment based on preliminary engineering. In locating yards, the preference is for relatively flat areas with easy existing access to minimize site grading and new road construction. The multi-purpose yards will be located in previously disturbed sites or in areas of minimal vegetative cover where possible.

Table B-10. Construction Multi-purpose Yards and Helicopter Fly Yards

Proposed Segment	Multi-Purpose Yards			Fly Yards		
	Quantity	Approximate Acreage Per Location	Approximate Acreage Total	Quantity	Approximate Acreage Per Location	Approximate Acreage Total
Segment 1W(a)[1/]	–	–	–	–	–	–
Segment 1W(c)	3	10	30	25	12.5	312
Segment 2	3	20	60	20	12.5	250
Segment 3	2	20	40	9	12.5	112
Segment 3A	–	–	–	1	12.5	12.5
Segment 4	6	20	120	45	12.5	562
Segment 5	2	20	40	14	12.5	175
Segment 6[2/]	–	–	–	–	–	–
Segment 7	3	20	60	32	12.5	400
Segment 8	5	20	100	41	12.5	512
Segment 9	6	20	120	49	12.5	612
Segment 10	1	20	20	10	12.5	125

1/ Co-located with Segment 1W(c).
2/ Multi-purpose yard and fly yard disturbance are accounted for in the substation calculation.

3.3.5 Site Preparation

Individual structure sites will be cleared to install the transmission line support structures and facilitate access for future transmission line and structure maintenance. Clearing individual structure sites will be done using a bulldozer to blade the required area. At each single-circuit 500-kV structure location, a flat area approximately 250 feet by 250 feet will be needed for construction laydown, tower assembly, and erection at each tower site. An area approximately 150 feet by 125 feet is required for 230-kV structures and an area 150 feet by 150 feet for 345-kV structures. This flat area provides a safe working space for placing equipment, vehicles, and materials. The work area is cleared of vegetation only to the extent necessary.

Where a structure is located on steep side slopes, a flat work area for structure installation and maintenance will require cutting into the side slope and using the cut material as fill to form part of the flat work area, or making a full bench cut and sidecasting the spoil below the pad. The actual dimensions of the flat work area disturbance may vary depending on factors such as terrain and vegetation. Total disturbance, including cuts and fills or spoils, will be larger than the flat work area and varies by side slope and soil type. Table B-11, below, provides rough estimates of the range of additional disturbance where structures must be installed on steep ground. The estimates include sidecast spoil as well as the amount of area needed for the cut and fill to create the pad itself.

Table B-11. Estimated Disturbance from Structure Pads by Slope Class

Slope class (% slope)	Disturbance Dimension (ft)	Acres of Total Disturbance Per Pad
0-5	250 x 250	1.4
5-10	375 x 300	2.6
10-20	450 x 300	3.1
>20	600 x 350	4.8

Disturbed soil will be managed during construction to limit erosion and sedimentation as specified in the SWPPP.

After line construction, all areas not needed for normal transmission line maintenance, including fire and personnel safety clearance areas, will be graded to blend as near as possible with the natural contours, then revegetated as required. Structure pads will be revegetated but not recontoured as the entire work area may be needed for maintenance. On steep slopes, the cuts and fills will be revegetated but not recontoured as the flat work area will be retained for safe live line maintenance (see Section 4.1.3 and Figures B-16 through B-18, below) and emergency response.

Additional equipment may be required if solid rock is encountered at a structure location. Rock-hauling, hammering, or blasting may be required to remove the rock. Excess rock that is too large in size or volume to be spread at the individual structure sites will be hauled away and disposed of at approved landfills or at a location specified by the landowner.

3.3.6 Install Structure Foundations

Table B-1 lists the number of 500-kV, 230-kV, and 345-kV support structures to be installed. Note that the short interconnection between the proposed Anticline Substation and the 345-kV yard at the existing Jim Bridger Substation is separately listed as Segment 3A.

H-Frame Installation

Each 230-kV and each 345-kV tangent H-frame would require the poles to be directly embedded in the ground. Holes are drilled in the ground using a truck- or track-mounted auger. The diameter of the hole excavated for embedment is typically the pole diameter plus 18 inches. The depth is typically 10 percent of the pole length plus 2 feet for 230-kV and 10 percent of the pole length plus 5 feet for 345-kV; in the case of this Project, it will be between 9 and 12 feet for 230-kV and 14 to 18 feet for 345-kV. Depending on underlying soil and rock conditions, the 345-kV H-frames may be supported by steel-reinforced concrete drilled piers.

When the pole is placed in the hole, native or select backfill is used to fill the voids around the perimeter of the hole. When backfill must be imported, material is obtained from commercial sources or from areas free of noxious weed species. See Section 1.1.1 of this appendix for a description of an H-frame structure and Figure B-1 for an illustration. Similarly, where solid rock is encountered, blasting (see Section 2.5.1 of this appendix) may be required.

Lattice Steel Tower Foundations

Each 500-kV support structure requires the installation of foundations, which are typically drilled concrete piers. Each 345-kV angle structure (and possibly each 345-kV H-frame structure) also requires the installation of foundations, which are typically drilled concrete piers. First, holes are excavated for each structure depending on the structure type - 4 holes for lattice, 3 holes for 345-kV angle structures, and 2 holes for H-frames (if necessary). The holes are drilled using truck- or track-mounted augers of various sizes depending on the diameter and depth requirements of the hole to be drilled. Table B-2 provides the dimensions of each of the foundation holes required for each structure. See Section 1.1.1 of this appendix for a description of each structure type and Figures B-2 and B-3 for structure illustrations. Prior to excavation, topsoil is

stripped from the area around the tower and stockpiled to prevent contamination. Excavation spoils are spread around the tower pad upon completion of the foundations. As part of final restoration, the stockpiled topsoil is spread over the excavation spoils and revegetated. Each foundation extends approximately 1 foot above the ground level.

Where solid rock is encountered, blasting (see Section 2.5.1 of this appendix), rock hauling, or the use of a rock anchoring or micropile system may be required. Micropiles are high capacity, small diameter (5-inch to 12-inch) drilled and grouted in-place piles designed with steel reinforcement to resist structural loading. The rock anchoring or micropile system will be used in areas where site access is limited or adjacent structures could be damaged as a result of blasting or rock hauling activities.

In environmentally sensitive areas with very soft soils, a HydroVac, which uses water pressure and a vacuum, may be used to excavate material into a storage tank. Alternatively, a temporary casing may be used during drilling to hold the excavation open, after which the casing is withdrawn as the concrete is placed in the hole. Alternatively, in areas where soil conditions preclude temporary casing withdrawal, it may be abandoned in place. The steel is cut below grade and backfilled once the foundation reveal has cured. In areas where it is not possible to operate large drilling equipment due to access or environmental constraints, hand digging may be required.

Reinforced-steel anchor bolt cages are installed after excavation and prior to structure installation. These cages are designed to strengthen the structural integrity of the foundations and are assembled at the nearest multi-purpose yard and delivered to the structure site via flatbed truck or helicopter. These cages are inserted in the holes prior to pouring concrete. The excavated holes containing the reinforcing anchor bolt cages are filled with concrete (Table B-2).

Typically, and because of the remote location of much of the transmission line route, concrete will be provided from portable batch plants set up approximately every 25 miles along the line route in one of the multi-purpose yards. Concrete will be delivered directly to the site in concrete trucks with a capacity of up to 10 cubic yards. In the more developed areas along the route and in proximity to the substations, the construction contractor may use local concrete providers to deliver concrete to the site when economically feasible.

3.3.7 Erect Support Structures

The 230-kV and 345-kV H-frame structures will be framed on site. Two methods of assembly can be used to accomplish this, the first of which is to assemble the poles, braces, cross arms, hardware, and insulators on the ground. A crane is then used to set the fully framed structure by placing the poles in the excavated holes. Alternatively, aerial framing can be used by setting the poles in the ground first and assembling the braces, cross arms, hardware, and insulators in the air. A crane moves along the ROW from structure to structure site setting the structures.

The 500-kV lattice steel structures are assembled on site, except where helicopter delivery is employed, as described in Section 2.5.2 of this appendix. Steel members for each structure are delivered to the site by flatbed truck. Assembly is facilitated on site by a truck-mounted crane. Subsequent to assembly, the structures are lifted onto

foundations using a large crane designed for erecting towers. The crane moves along the ROW from structure to structure site erecting the towers. Figure B-13 illustrates the tower erection sequence.

3.3.8 String Conductors, Shield Wire, and Fiber Optic Ground Wire

Conductor, shield wire, and OPGW are placed on the transmission line support structures by a process called stringing. The first step to wire stringing is to install insulators (if not already installed on the structures during ground assembly) and stringing sheaves. Stringing sheaves are pulleys that are temporarily attached to the lower portion of the insulators at each transmission line support structure to allow conductors to be pulled along the line. Figure B-14 illustrates the sequence of steps in installing conductors.

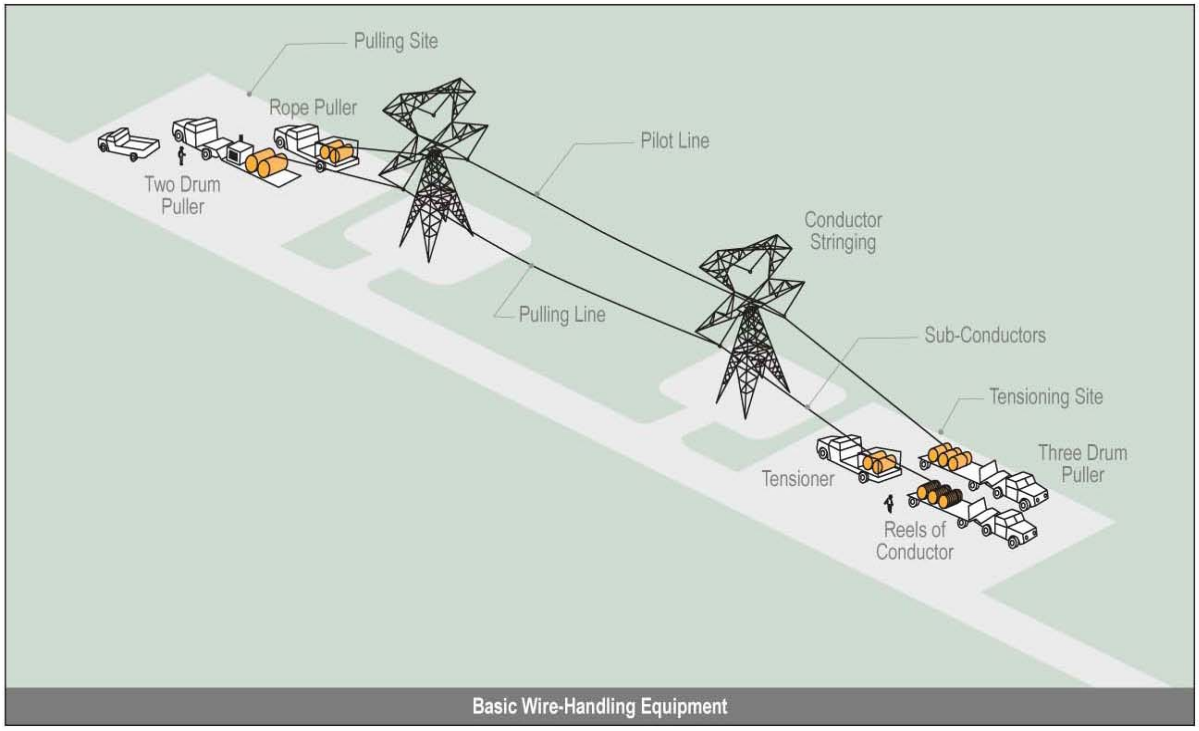

Figure B-14. Conductor Installation

Temporary clearance structures (also called guard structures) are erected where required prior to stringing any transmission lines. The temporary clearance structures are typically vertical wood poles with cross arms and are erected at road crossings or crossings with other energized electric and communication lines to prevent contact during stringing activities. Bucket trucks may also be used to provide temporary clearance. Bucket trucks are trucks fitted with a hinged arm ending in an enclosed platform called a bucket, which can be raised to let the worker in the bucket service portions of the transmission structure as well as the insulators and conductors without climbing the structure.

Once the stringing sheaves and temporary clearance structures are in place, the initial stringing operation commences with the pulling of a lighter weight sock line through the sheaves along the same path the transmission line follows. Typically the sock line is

pulled in via helicopter. The sock line is attached to the hard line, which follows the sock line as it is pulled through the sheaves. The hard line is then attached to the conductor, shield wire, or OPGW to pull them through the sheaves into their final location. Pulling the lines may be accomplished by attaching them to a specialized wire stringing vehicle. Following the initial stringing operation, pulling and tensioning the line is required to achieve the correct sagging of the transmission lines between support structures.

Pulling and tensioning sites for 500-kV construction are required approximately every 3 miles along the ROW and are approximately 4 acres each to accommodate required equipment. Pulling and tensioning sites for 230-kV and 345-kV construction are required for each reel length (9,250 feet or approximately every 2 miles) along the ROW and are approximately 1.2 acres each to accommodate required equipment. Equipment at sites required for pulling and tensioning activities includes tractors and trailers with spooled reels that hold the conductors and trucks with the tensioning equipment. To the extent practicable, pulling and tensioning sites are located within the ROW. Depending on topography, minor grading may be required at some sites to create level pads for equipment. Finally, the tension and sag of conductors and wires are fine-tuned, stringing sheaves are removed, and the conductors are permanently attached to the insulators at the support structures.

At the tangent and small angle structures, the conductors are attached to the insulators using clamps to “suspend” the conductors from the bottom of the insulators. At the larger angle dead-end structures, the conductors cannot be pulled through and so are cut and attached to the insulator assemblies at the structure “dead ending” the conductors. There are two primary methods to attach the conductor to the insulator assembly at the dead-end structure. The first method, hydraulic compression fittings, uses a large press and pump that closes a metal clamp or sleeve onto the conductor. This method requires heavy equipment and is time consuming. The second method, implosive fittings, uses explosives to compress the metal together. Implosive fittings do not require heavy equipment, but do create noise similar to a gunshot when the primer is struck. Implosive sleeves may be set off either one at a time or in groups. The implosive type sleeve is faster to install and results in a secure connection between the conductor and the sleeve. Implosive sleeves are planned for the Project.

The 500-kV and 345-kV single-circuit lines use a three conductor bundle for each phase. At each single-circuit 500-kV or 345-kV dead-end structure, 18 implosive dead-end sleeves (six per phase, one for each of the three subconductors on each of the three phases, and on each side of the structure) will be required. Additionally, 18 compression or implosive sleeves will be required to fabricate and install the jumpers that connect the conductors from one side of the dead-end structure to the other, for a total of 36 sleeves for each single-circuit dead-end structure.

The 230-kV single-circuit lines use a two-conductor bundle for each phase. Each 230-kV dead-end structure requires 12 implosive or compression type sleeves to dead-end the conductors and 12 sleeves to fabricate the jumpers, for a total of 24 sleeves at each dead-end structure. For the overall Project, approximately 16,000 to 18,000 compression or implosive fittings will be used.

3.3.9 Cleanup and Site Reclamation

Construction sites, yards, and access roads will be kept in an orderly condition throughout the construction period. Approved enclosed refuse containers will be used throughout the Project. Refuse and trash will be removed from the sites and disposed of in an approved manner. Oils or chemicals will be hauled to a disposal facility authorized to accept such materials. Open burning of construction trash will not be allowed.

Disturbed areas not required for access roads and maintenance areas around structures will be restored and revegetated, as required by the property owner or land management agency. Service roads will be decompacted and the topsoil replaced. The road prism will not be restored to original contours so that a stable road base is present if equipment is needed to access a tower during operation. The landowner, land-management agency, or local Natural Resources Conservation Service will be consulted regarding the appropriate seed mix and rate to revegetate the road surface. Vegetation on an 8-foot width of road surface may be periodically managed to allow equipment travel if necessary. Temporary culverts will be removed. Drivable at-grade waterbars will be installed where needed with frequency proportional to road slope to prevent erosion of the roadbed. Applicable agency BMPs and unit management plan requirements will be implemented. All practical means will be applied to restore the land outside the minimum areas needed for safe operation to its original contour and to restore natural drainage patterns along the ROW.

3.4 Communication System

OPGW for the communication system will be installed at the same time as the conductors on each of the transmission line structures. It will be spliced and tensioned in the same way.

3.4.1 Regeneration Stations

Similar to the substations, the selected area is graded, vegetation is removed, and a layer of crushed rock is installed. Typically, a 12-foot by 32-foot by 9-foot tall building or equipment shelter (metal or concrete) is constructed on the site. An emergency generator with a liquid petroleum gas fuel tank is installed at the site inside the fenced area. Two diverse cable routes (aerial and/or buried) from the transmission ROW to the equipment shelter are installed.

3.4.2 Access Road

Regeneration station roads are constructed using a bulldozer or grader, followed by a roller to compact and smooth the ground. Front-end loaders are used to move the soil locally or off site. Either gravel or asphalt is applied to the prepared base layer for the access road into all regeneration stations.

3.5 Substation Construction

There will be substation construction activities at 12 locations for the Project. A summary of construction equipment to be used at each substation is included in Section 2.6 of this appendix. The proposed Heward, Aeolus, Anticline, and Cedar Hill Substations are needed to electrically connect the new transmission line segments. In

addition, expansion of the substation yards at the existing Windstar, Jim Bridger (345-kV yard), Populus, Borah, and Midpoint Substations would be required. Additional work within the existing substation yard perimeter would be needed at Dave Johnston, Shirley Basin, and Hemingway Substations.

3.5.1 Substation Roads

Substation roads are constructed using a bulldozer or grader, followed by a roller to compact and smooth the ground. Front-end loaders are used to move the soil locally or offsite. Either gravel or asphalt is applied to the prepared base layer.

3.5.2 Soil Boring

Typically, soil borings are made on a 600-foot grid spacing within the substation, particularly at the approximate location of large structures and equipment such as transmission line dead ends and transformers, to determine the engineering properties of the soil. Borings are made with truck- or track-mounted equipment. The borings are approximately 4 inches in diameter, range from 15 to over 60 feet deep, and are backfilled with the excavated material upon completion of soil sampling.

3.5.3 Clearing and Grading

Clearing of all vegetation is required for the entire substation area, including a distance of about 10 feet outside the fence. This is required for personnel safety due to grounding concerns and because of lower clearances to energized conductors within the substations as compared to transmission lines. These lower clearances are allowed by the NESC because the entire substation is fenced.

An insulating layer on the surface of the substation is required to protect personnel from high currents and voltages during electrical fault conditions. Typically, vegetation is removed and a 4- to 6-inch layer of crushed rock is applied to the finished surface of the substation. Then the substation is usually treated with a soil sterilizer to prevent vegetation growth because the vegetation would degrade the insulating qualities of the crushed rock. The entire substation area will be graded essentially flat, with just enough slope to provide for runoff of precipitation. The substation is graded to use existing drainage patterns to the extent possible. In some cases, drainage structures, such as ditches or culverts, may be required. Clearing and grading material will be disposed of in compliance with local ordinances. Material from off site is obtained at existing borrow or commercial sites and is trucked to the substation using existing roads and the substation access road.

3.5.4 Multi-Purpose Yards

Construction multi-purpose yards may be located outside the substation-fenced area near the substation. These yards may be part of the substation property or leased by the contractor. After construction is completed, all debris and unused materials will be removed and the yards returned to preconstruction conditions by the construction contractor.

3.5.5 Grounding

A grounding system is required in each substation for detection of faults and for personnel safety. The grounding system typically consists of buried copper conductor

arranged in a grid system and driven ground rods, typically 8 to 10 feet long. The ground rods and any equipment and structures are connected to the grounding conductor. The amount of conductor and length and number of ground rods required are calculated based on fault current and soil characteristics.

3.5.6 Fencing

Security fencing is installed around the entire perimeter of each new or expanded substation to protect sensitive equipment and prevent accidental contact with energized conductors by third parties. This 7-foot-high fence is constructed of chain link with steel posts. One foot of barbed wire or other similar material is installed on top of the chain link yielding a total fence height of 8 feet. Locked gates are installed at appropriate locations for authorized vehicle and personnel access.

3.5.7 Foundation Installation

Foundations for supporting structures are of two types—spread footings or drilled piers. Spread footings are placed by excavating the foundation area, placing forms and reinforcing steel and anchor bolts, and pouring concrete into the forms. After the foundation has been poured, the forms are removed, and the surface of the foundation dressed. Pier foundations are placed in a hole generally made by a track- or truck-mounted auger. Reinforcing steel and anchor bolts are placed into the hole using a track- or truck-mounted crane. The portion of the foundation above ground is formed. The portion below ground uses the undisturbed earth of the augered hole as the form. After the foundation has been poured, the forms are removed, the excavation backfilled, and the surface of the foundation dressed.

Equipment foundations for circuit breakers and transformers will be slab-on-grade type. These foundations are placed by excavating the foundation area; placing forms, reinforcing steel, and anchor bolts (if required); and placing concrete into the forms. After the foundations have been poured, the forms are removed, and the surface of the foundation dressed. Where necessary, provision is made in the design of the foundations to mitigate potential problems due to frost. Reinforcing steel and anchor bolts are transported to each site by truck, either as a prefabricated cage or loose pieces, which is then fabricated into cages on the site. Concrete is hauled to the site in concrete trucks. Excavated material is spread at the site or disposed of in accordance with local ordinances. Structures and equipment are attached to the foundations by means of threaded anchor bolts embedded in the concrete. Some equipment such as transformers and reactors may not require anchor bolts.

3.5.8 Oil Containment

Some types of electrical equipment, such as transformers and some types of reactors and circuit breakers, are filled with an insulating mineral oil. Containment structures are required to prevent equipment oil from getting into the ground or waterbodies in the event of a rupture or leak. These structures take many forms depending on site requirements, environmental conditions, and regulatory restrictions. The simplest type of oil containment is a pit, of a calculated capacity, under the oil-filled equipment that has an oil-impervious liner. The pit is filled with rock to grade level. In case of an oil leak or rupture, the oil captured in the containment pit is pumped into tanks or barrels and transported to a disposal facility. If required, more elaborate oil containment

systems can be installed. This may take the form of an on- or off-site storage tank and/or oil-water separator equipment depending on site requirements.

3.5.9 Structure and Equipment Installation

Supporting steel structures are erected on concrete foundations as noted above. These are set with a track- or truck-mounted crane and attached to the foundation anchor bolts by means of a steel base plate. These structures are used to support the energized conductors and certain types of equipment. This equipment is lifted onto the structure by means of a truck-mounted crane and bolted to the structures; electrical connections are then made. Some equipment, such as transformers, reactors, and circuit breakers, are mounted directly to the foundations without supporting structures. These are set in place by means of a truck-mounted crane. Some of this equipment requires assembly and testing on the pad. Electrical connections to the equipment are then made.

3.5.10 Control Building Construction

One or more control buildings are required at each substation to house protective relays, control devices, battery banks for primary control power, and remote monitoring equipment. The size and construction of the building depends on individual substation requirements. Typically, the control building is constructed of concrete block, pre-engineered metal sheathed, or composite surfaced materials. Once the control house is erected, equipment is mounted and wired inside. Typically an emergency generator will be located near the control house within the substation fenced area.

3.5.11 Conductor Installation

The two main types of high voltage conductors used in substations are tubular aluminum for rigid bus sections and/or stranded aluminum conductor for strain bus and connections to equipment. Rigid bus is be a minimum of 4 inches in diameter for this Project and is supported on porcelain or polymer insulators on steel supports. The bus sections are welded together and attached to special fittings for connection to equipment. Stranded aluminum conductors are used as flexible connectors between the rigid bus and the station equipment.

3.5.12 Conduit and Control Cable Installation

Most substation equipment requires low-voltage connections to protect relaying and control circuits. These circuits allow metering, protective functions, and control (both remote and local) of the power system. Connections are made from the control building to the equipment through multi-conductor control cables installed in conduits and/or pre-cast concrete cable trench system.

3.5.13 Construction Cleanup and Landscaping

The cleanup operation will be performed after construction activities are completed. All waste and scrap material will be removed from the site and deposited in local permitted landfills in accordance with local ordinances. Ruts and holes outside the substation fence due to construction activities will be regraded. Revegetation and restoration will be conducted as required. Landscaping required by the permitting agency will use drought-tolerant plant materials

3.6 Special Construction Techniques

3.6.1 Blasting

As described in Section 2.2.5 of this appendix, 500-kV lattice tower foundations are normally installed using drilled shafts or piers and 230-kV and 345-kV H-frame structures are normally directly embedded. If hard rock is encountered within the planned drilling depth, blasting may be required to loosen or fracture the rock in order to reach the required depth to install the structure foundations. Areas where blasting will likely occur have been identified based on the geologic setting of the proposed alignment. Table B-12 summarizes the shallow bed rock conditions within each segment. More precise locations where blasting is expected will be identified based on a site-specific geotechnical study carried out as part of detailed design.

Table B-12. Summary of Shallow Bedrock by Segment

Segment Number	Depth to Bedrock (feet) by Percent of Analysis Area			
	1 to 4	4 to 8	8 to 12	Total Percent of Analysis Area
1	7	<1	14	21
2	–	–	–	–
3	66	6	–	72
4	40	1	3	44
5	8	25	–	33
6	47	29	–	75
7	15	23	8	46
8	16	51	14	81
9	42	21	15	78
10	20	2	2	24

The construction contractor will be required to prepare an overall Blasting Plan as outlined in Appendix M of the POD for the Project, subject to the approval of the Companies. The Blasting Plan would detail the contractor's proposals for compliance with the Companies' blasting specifications and details the general concepts proposed to achieve the desired excavations using individual shot plans. In addition, the plan will address proposed methods for controlling fly rock, for blasting warnings, and for use of non-electrical blasting systems. The contractor will be required to provide data to support the adequacy of the proposed efforts regarding the safety of structures and slopes and to ensure that an adequate foundation is obtained. When utilized, blasting will take place between sunrise and sunset.

The shot plans will detail, including sketches, the drilling and blasting procedures; the number, location, diameter, and inclination of drill holes; the amount, type, and distribution of explosive per hole and delay; and pounds of explosive per square foot for presplitting and smooth blasting. The contractor would be required to maintain explosives logs.

Blasting near buildings, structures, and other facilities susceptible to vibration or air blast damage will be carefully planned by the contractor and the Companies and controlled to eliminate the possibility of damage to such facilities and structures. The Blasting Plan will include provisions for control to eliminate vibration, fly rock, and air blast damage.

Blasting will be very brief in duration (milliseconds), and the noise dissipates with distance. Blasting produces less noise and vibration than comparable non-blasting methods to remove hard rock. Non-blasting methods include track drill rigs, rock breakers, jack hammers, rotary percussion drills, core barrels, and rotary rock drills with rock bits, each of which takes substantially longer to excavate approximately the same amount of rock as blasting.

No readily available data were found to evaluate depth to bedrock at depths greater than 12 feet. In 2010, drilling began in some areas of Segments 1 through 4 to support geotechnical evaluations for transmission line structures. The drilling was conducted on public land and private land where landowner permission was obtained. The drilling data indicate that several borings contained bedrock at depths less than 20 feet. Therefore, it is assumed that shallow bedrock could be encountered in any of the segments. As a conservative measure, it was assumed that all shallow bedrock that will need to be removed will require blasting.

Due to the lack of depth to bedrock data deeper than 12 feet, the amount of shallow bedrock presented in Table B-9 likely underestimates the amount of shallow bedrock that will be intercepted during construction.

3.6.2 Helicopter Use

Access roads are required to each tower site for construction and for operation and maintenance activities. Helicopters may be used to support these activities. Project construction activities potentially facilitated by helicopters may include delivery of construction laborers, equipment, and materials to structure sites; structure placement; hardware installation; and wire stringing operations. Helicopters may also be used to support the administration and management of the Project by the Companies. The use of helicopter construction methods for this Project will not change the length of the access road system required for operating the Project because vehicle access is required to each tower site regardless of the construction method employed.

In some cases it may be desirable to employ heavy lift helicopters in the single-circuit 500-kV tower erection process[7]. To allow the construction contractor flexibility in what construction methods can be used, the construction specification will be written to allow the contractor the option of using ground-based or helicopter construction methods, or a combination thereof. Use of a helicopter for structure erection may be driven by various factors, including access to the structure locations, construction schedule, and/or construction economics.

When helicopter construction methods are employed, helicopter construction activities are based at a fly yard. The fly yards will be sited at locations to permit a maximum fly time of 4 to 8 minutes to reach structure locations, typically at about 5-mile intervals. Fly yards are used for material storage and erection of structure sections prior to transport to the final structure locations for installation. Additionally, fueling trucks, maintenance trucks, and operations crews are based in the fly yards. Appropriate dust control measures will be implemented at these fly yard locations as well as the locations where helicopters are used along the route.

[7] For the Gateway West Project, a typical 500-kV single-circuit tangent tower weighs approximately 46,000 pounds.

Prior to installation, each tower structure is assembled in multiple sections at the fly yard. Tower sections or components are assembled by weight based on the lifting capacity of the helicopter in use. The lift capacity of helicopters is dependent on the elevation of the fly yard, the tower site, and the intervening terrain. The heavy lift helicopters that could be used to erect the single-circuit 500-kV tower sections are able to lift a maximum of 15,000 to 20,000 pounds per flight, depending on elevation.

After assembly at the fly yard, the tower sections are attached by cables from the helicopter crane to the top four corners of the structure section and airlifted to the structure location. Upon arrival at the structure location, the section is placed directly on to the foundation or atop the previous structure section. Guide brackets attached on top of each section will assist in aligning the stacked sections. Once aligned correctly, line crews climb the structures to bolt the sections together permanently.

It should be noted that the fly yard locations provided are considered approximate and subject to change, additions, or deletions upon acquisition of an installation contractor prior to the beginning of construction. Upon completion of field review, a final determination is made on the necessity of certain fly yards and the respective locations that provide the most efficient, economic, safest, and least impact use of the fly yards that are needed.

3.6.3 Water Use

Construction of the transmission lines and substations requires water. Major water uses are for transmission line structure and substation foundations, and dust control during ROW and substation grading and site work. A minor use of water during construction will include the establishment of substation landscaping where required. Table B-13 lists the amount of water required for the Project.

Transmission lines use water for two primary purposes: foundation construction and ROW dust control. The required water will be procured from municipal sources, from commercial sources, or under a temporary water use agreement with landowners holding existing water rights. No new water rights will be required. In the construction of foundations, water is transported to the batch plant site where it will be used to produce concrete. From the batch plant, the wet concrete is transported to the structure site in concrete trucks for use in foundation installation (refer to Section 2.2.4 of this appendix for more details on foundation installation).

Construction of the transmission lines and related facilities generates a temporary increase in fugitive dust. If the level of fugitive dust is too high in specific Project areas, as determined in cooperation with the landowner or agency, water will be applied to disturbed areas to minimize dust. The construction contractor will be required to develop fugitive dust plan(s) as outlined in Appendix N of the POD.

Water usage for substation construction is primarily for dust control during site preparation work. During this period, construction equipment will be cutting, moving, and compacting the subgrade surface. As a result, water trucks patrolling the site to control dust will make up to one pass per hour over the station site. Once site preparation work is complete, concrete for the placement of foundations becomes the largest user of water and dust control becomes minimal.

Table B-13. Estimated Water Usage by Component, Segment, and Activity

Transmission Line Segments	Total Miles	No of Structures[1/]	Foundation Gallons per Segment[2/]	Dust Control Gallons per Segment[3/]	Total Gallons per Segment
1W(a)	73.8	531	–	1,726,656	1,726,656
1W(c)	73.6	547	–	1,561,498	1,561,498
2	91.9	390	1,174,149	1,553,990	2,728,139
3	45.9	194	717,535	949,660.8	1,667,196
3A	5.1	25	35,400	121,700	157,100
4	197.6	856	2,532,644	3,351,965	5,884,609
5	55.7	246	694,846	919,632	1,614,478
6	0.5	10	28,361	37,536	65,897
7	118.2	523	1,514,481	2,004,422	3,518,904
8	131.5	575	1,636,434	2,165,827	3,802,261
9	162.2	708	2,005,128	2,653,795	4,658,923
10	34.4	157	439,597	581,808	1,021,405
Total Transmission Line Water Usage (million gallons = MG)					28.4
Substations	Acres of Construction Disturbance	Gallons for Concrete	Gallons for Grading/Site Work/Dust Control[3/]	Gallons for Substation Landscaping	Total Gallons per Substation
Windstar Substation	5	9,200	1,703,196	–	1,712,396
Dave Johnston Substation	–	–	–	–	–
Heward Substation	7	5,400	993,531	–	998,931
Shirley Basin Substation	-	-	-	-	-
Aeolus Substation	120	130,000	24,128,610	–	24,258,610
Anticline Substation	150	103,000	19,160,955	–	19,263,955
Jim Bridger 345-kV Substation	10	7,700	1,419,330	–	1,427,030
Populus Substation	90	69,000	12,773,970	–	12,842,970
Borah Substation	40	34,000	5,677,320	–	5,711,320
Midpoint	44	34,000	5,677,320	–	5,711,320
Cedar Hill Substation	65	39,000	7,096,650	–	7,135,650
Hemingway Substation	–	–	–	–	–
Total Substation Water Usage (MG)					79.1
Regeneration Sites			**Number**	**Gallons for all Activities**	**Total Gallons Regen Sites**
Sites			13	800	10,400
Total Project (MG)					107.5

1/ Water usage per structure is used to make concrete at the batch plant site.
2/ All 230-kV structures will be directly embedded. Concrete foundations are not required; therefore, no water is required.
3/ The amount of water used for dust control varies significantly based on many conditions. Estimates are based on reasonable construction experience.

Once site grading is complete, the balance of the substation construction work will be performed on bare subgrade soil or subgrade with a thin layer of rock. Fire risk is minimal due to the bare ground or rock surface and will be contained within the confines of station fenced area.

3.7 Construction Elements

3.7.1 Construction Workforce

The proposed Project will be constructed primarily by contract personnel, with the Companies responsible for Project administration and inspection. The construction workforce will consist of laborers, craftsmen, supervisory personnel, support personnel, and construction management personnel who will perform the construction tasks. Estimated construction workforce requirements are summarized by EPC[8] contract in Figure B-15. These projections were developed for the various Project components by the Companies' transmission engineering contractor using project planning computer software. Overall, Phase 1 Project construction is expected to occur between June 2015 and December 2018, with multiple contractors working concurrently on the separate line segments and substations of Gateway West in order to meet the planned in-services dates. The first phase will extend from Windstar to Populus, and the second phase will extend from Populus to Hemingway, with the last segment being complete by the end of 2021.

The Companies' proposed schedule identifies general construction timeframes by segment and substation, generally 4 to 5 years (see Table B-20). Construction times by segment are, however, expected to range from about 8 months to 27 months; similarly, substation construction times range from 6 to 24 months. This construction will take place within the broader timeframes identified in Table B-20, but the exact timing is unknown. The combined labor requirements by EPC shown in Figure B-15 are, therefore, based on a representative Project schedule that is used in the EIS for the purposes of analysis.

Project-wide, the Project workforce will reach a peak of 745 workers in weeks 58 and 59. The construction personnel peak on site in any line segment will be when the wire stringing operations begin while several other operations are occurring at the same time, which will likely include excavating holes, installing foundations (500-kV), hauling materials, assembling structures, and erecting/setting structures.

With respect to each substation, installation of the ground grid, installation of the conduit and cable trench system, assembly and erection of steel structures, construction of the control building, and installation of major equipment will start when the foundations are 50 percent complete and will overlap with each other, resulting in the highest concentration of the work force on site.

[8] EPC contract means that the final engineering, all or some of the procurement, and the construction are performed by one contractor.

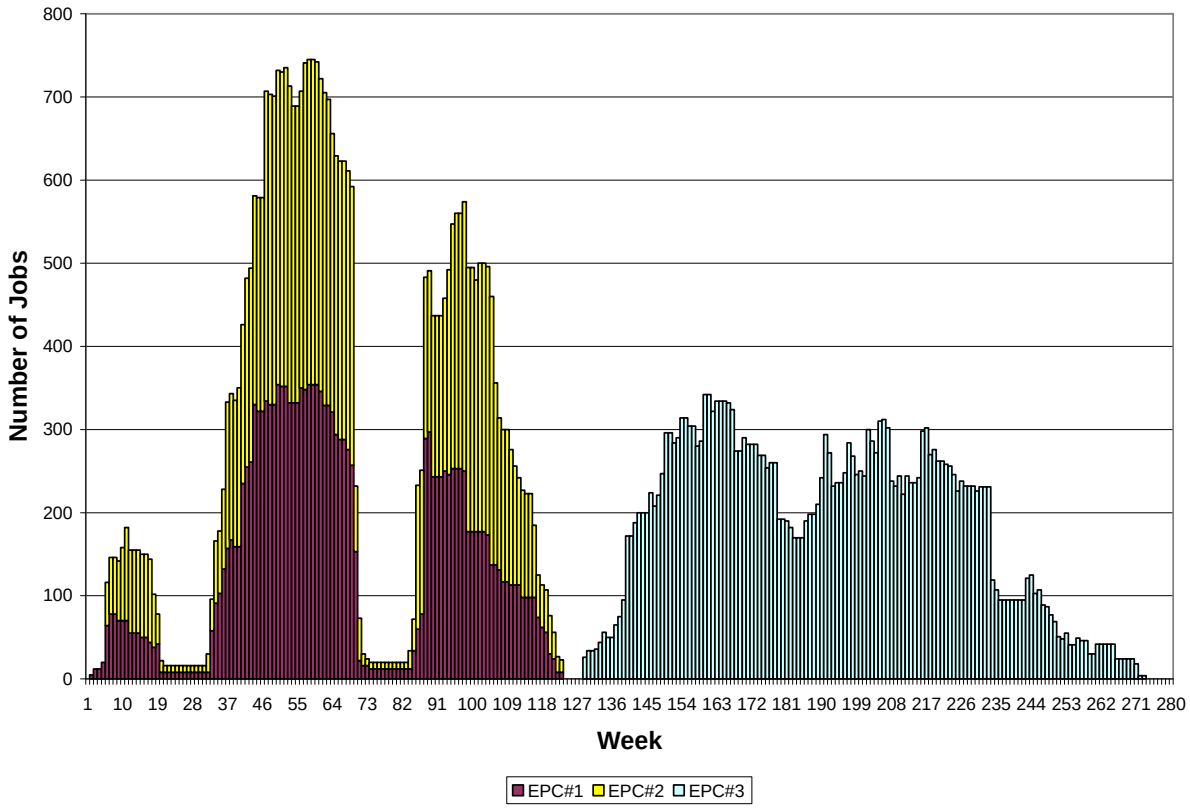

Figure B-15. Total Projected Labor Force by EPC Analysis Area and Week

The substation work is estimated to take between 40 and 60 personnel at each site. Site grading requires a small number of people including a surveyor, heavy equipment operators, foreman, and construction management personnel. Each station requires numerous concrete crews in order to complete the below grade construction and concrete placement on schedule. Concrete will be provided by a batch plant producing approximately 160 cubic yards per day delivered in 8 cubic yard trucks. Other below-grade crews will be needed to install conduit, cable trench, and ground mat material. The below-grade crews will be on site overlapping the schedule of the concrete crew. Several three-person crews working with boom trucks and bucket trucks will erect the steel and install the physical equipment in the yard. Considering the size of the substation expansions, this requires approximately three fully equipped crews per station. Electrical installation will be handled by 20 people arranged into two-person teams alternating between indoor and outdoor activity. Construction will generally occur between 7 a.m. and 7 p.m., Monday through Saturday. Additional hours may be necessary to make up schedule deficiencies or to complete critical construction activities.

3.7.2 Construction Equipment and Traffic

Equipment required for construction of the Gateway West transmission lines and substations will include, but is not limited to, that listed in Tables B-14 through B-17. These tables also include the anticipated daily duration of equipment use for each segment for each type. Table B-18 provides an estimate of the average and peak construction traffic during the construction period.

Table B-14. Transmission Line Construction Equipment Requirements – Segments 1–4

Equipment	Segment 1W(a)			Segment 1W(c)			Segment 2			Segment 3 and 3A			Segment 4		
	Qty.	hrs/ day	days/ wk	Qty.	hrs/ day	days/ wk	Qty.	hrs/ day	days/ wk	Qty.	hrs/ day	days/ wk	Qty.	hrs/ day	days/ wk
Pickup	10	8	6	10	8	6	37	8	6	37	8	6	37	8	6
Bulldozer	3	4	6	3	4	6	6	4	6	6	4	6	6	4	6
Motor Grader	2	4	6	2	4	6	4	4	6	4	4	6	4	4	6
Water Truck	2	6	6	2	6	6	5	6	6	5	6	6	5	6	6
Hole Digger	2	8	6	2	8	6	3	8	6	3	8	6	3	8	6
Truck (2-ton)	3	5	6	3	5	6	5	5	6	5	5	6	5	5	6
Concrete Truck	0	6	6	0	6	6	6	6	6	6	6	6	6	6	6
Carry All	12	6	6	12	6	6	26	6	6	26	6	6	26	6	6
Hydro Crane	0	7	6	0	7	6	1	7	6	1	7	6	1	7	6
Crane	7	7	6	7	7	6	22	7	6	22	7	6	22	7	6
Wagon Drill	0	5	6	0	5	6	1	5	6	1	5	6	1	5	6
Steel Haul Truck	2	7	6	2	7	6	4	7	6	4	7	6	4	7	6
Fork Lift	3	6	6	3	6	6	5	6	6	5	6	6	5	6	6
Wire Reel Trailer	6	7	6	6	7	6	12	7	6	12	7	6	12	7	6
Diesel Tractor	5	5	6	5	5	6	12	5	6	12	5	6	12	5	6
Boom Truck (5-ton)	3	6	6	3	6	6	6	6	6	6	6	6	6	6	6
Splicing Truck	1	3	6	1	3	6	4	3	6	4	3	6	4	3	6
3-Drum Puller	2	4	6	2	4	6	4	4	6	4	4	6	4	4	6
Single Drum Puller	1	3	6	1	3	6	2	3	6	2	3	6	2	3	6
Tensioner	1	4	6	1	4	6	4	4	6	4	4	6	4	4	6
Sagging Dozer	2	3	6	2	3	6	4	3	6	4	3	6	4	3	6
Static Wire Reel Trailer	2	5	6	2	5	6	4	5	6	4	5	6	4	5	6
Dump Truck	2	4	6	2	4	6	3	4	6	3	4	6	3	4	6
Loader	3	4	6	3	4	6	3	4	6	3	4	6	3	4	6
Light Helicopter	1	6	6	1	6	6	2	6	6	2	6	6	2	6	6
Heavy Helicopter	0	6	6	0	6	6	2	6	6	2	6	6	2	6	6

Table B-15. Transmission Line Construction Equipment Requirements – Segments 5-10

Equipment	Segment 5			Segment 6[1/]			Segment 7			Segment 8			Segment 9			Segment 10		
	Qty.	hrs/ day	days/ wk	Qty.	hrs/ day	days/ wk	Qty.	hrs/ day	days / wk	Qty.	hrs/ day	days / wk	Qty.	hrs/ day	days / wk	Qty.	hrs/ day	days / wk
Pickup	30	8	6	10	8	6	30	8	6	30	8	6	30	8	6	30	8	6
Bulldozer	6	4	6	2	4	6	6	4	6	6	4	6	6	4	6	6	4	6
Motor Grader	4	4	6	2	4	6	4	4	6	4	4	6	4	4	6	4	4	6
Water Truck	3	6	6	1	6	6	3	6	6	3	6	6	3	6	6	3	6	6
Hole Digger	3	8	6	3	8	6	3	8	6	3	8	6	3	8	6	3	8	6
Truck (2-ton)	4	5	6	2	5	6	4	5	6	4	5	6	4	5	6	4	5	6
Concrete Truck	6	6	6	6	6	6	6	6	6	6	6	6	6	6	6	6	6	6
Carry All	17	6	6	4	6	6	17	6	6	17	6	6	17	6	6	17	6	6
Hydro Crane	1	7	6	1	7	6	1	7	6	1	7	6	1	7	6	1	7	6
Crane	16	7	6	2	7	6	16	7	6	16	7	6	16	7	6	16	7	6
Wagon Drill	1	5	6	1	5	6	1	5	6	1	5	6	1	5	6	1	5	6
Steel Haul Truck	4	7	6	4	7	6	4	7	6	4	7	6	4	7	6	4	7	6
Fork Lift	5	6	6	3	6	6	5	6	6	5	6	6	5	6	6	5	6	6
Wire Reel Trailer	6	7	6	6	7	6	6	7	6	6	7	6	6	7	6	6	7	6
Diesel Tractor	6	5	6	6	5	6	6	5	6	6	5	6	6	5	6	6	5	6
Boom Truck (5-ton)	3	6	6	3	6	6	3	6	6	3	6	6	3	6	6	3	6	6
Splicing Truck	2	3	6	2	3	6	2	3	6	2	3	6	2	3	6	2	3	6
3-Drum Puller	2	4	6	2	4	6	2	4	6	2	4	6	2	4	6	2	4	6
Single Drum Puller	1	3	6	1	3	6	1	3	6	1	3	6	1	3	6	1	3	6
Tensioner	2	4	6	2	4	6	2	4	6	2	4	6	2	4	6	2	4	6
Sagging Dozer	2	3	6	2	3	6	2	3	6	2	3	6	2	3	6	2	3	6
Static Wire Reel Trailer	2	5	6	2	5	6	2	5	6	2	5	6	2	5	6	2	5	6
Dump Truck	3	4	6	1	4	6	3	4	6	3	4	6	3	4	6	3	4	6
Loader	3	4	6	1	4	6	3	4	6	3	4	6	3	4	6	3	4	6
Light Helicopter	1	6	6	1	6	6	1	6	6	1	6	6	1	6	6	1	6	6
Heavy Helicopter	1	6	6	1	6	6	1	6	6	1	6	6	1	6	6	1	6	6

1/ Construction work will involve approximately five transmission line structures at each end of Segment 6 to tie into new substation positions.

Table B-16. Substation Equipment Requirements – Segments 1–4

Equipment	Windstar			Dave Johnston			Heward			Shirley Basin			Aeolus			Anticline		
	Qty.	hrs/ day	days/wk	Qty.	hrs/ day	days/ wk	Qty.	hrs/ day	days / wk	Qty.	hrs/ day	days/ wk	Qty.	hrs/ day	days/wk	Qty.	hrs/ day	days / wk
Below Grade																		
Auger	2	10	6	2	10	6	2	10	6	2	10	6	10	10	6	20	10	6
Backhoe	1	10	6	1	10	6	1	10	6	1	10	6	2	10	6	4	10	6
Front Loader	1	10	6	1	10	6	1	10	6	1	10	6	1	10	6	2	10	6
Ditch Witch	1	10	6	1	10	6	1	10	6	1	10	6	2	10	6	4	10	6
Concrete Truck	2	10	6	2	10	6	2	10	6	2	10	6	10	10	6	20	10	6
Water Truck	1	10	6	1	10	6	1	10	6	1	10	6	1	10	6	1	10	6
Dump Truck	1	10	6	1	10	6	1	10	6	1	10	6	1	10	6	4	10	6
Trailer	2	10	6	2	10	6	2	10	6	2	10	6	2	10	6	2	10	6
Crew Truck/Car	2	10	6	2	10	6	2	10	6	2	10	6	4	10	6	8	10	6
Hauler	1	10	6	1	10	6	1	10	6	1	10	6	1	10	6	1	10	6
Skid Steer Loader	1	10	6	1	10	6	1	10	6	1	10	6	1	10	6	2	10	6
Batch Plant	1	10	6	1	10	6	1	10	6	1	10	6	1	10	6	1	10	6
Drill Rig	1	10	6	1	10	6	1	10	6	1	10	6	1	10	6	2	10	6
Truck with Trailer	2	10	6	2	10	6	2	10	6	2	10	6	4	10	6	4	10	6
Compressor	1	10	6	1	10	6	1	10	6	1	10	6	2	10	6	4	10	6
Construction Fork	1	10	6	1	10	6	1	10	6	1	10	6	1	10	6	2	10	6
980 Loader	1	10	6	1	10	6	1	10	6	1	10	6	1	10	6	2	10	6
Vibrating Roller	1	10	6	1	10	6	1	10	6	1	10	6	1	10	6	2	10	6
Inspection Truck	1	10	6	1	10	6	1	10	6	1	10	6	1	10	6	1	10	6
Above Grade																		
Crane	1	10	6	1	10	6	1	10	6	1	10	6	1	10	6	1	10	6
Bucket Truck	2	10	6	2	10	6	2	10	6	2	10	6	2	10	6	4	10	6
Boom Truck	2	10	6	2	10	6	2	10	6	2	10	6	2	10	6	3	10	6
Fork Lift	1	10	6	1	10	6	1	10	6	1	10	6	1	10	6	2	10	6

Table B-17. Substation Equipment Requirements – Segments 5–10

Equipment	Jim Bridger 345-kV Yard			Populus			Borah			Cedar Hill			Midpoint			Hemingway		
	Qty.	hrs/ day	days/ wk	Qty.	hrs/ day	days/ wk	Qty.	hrs/ day	days/ wk	Qty.	hrs/ day	days/ wk	Qty.	hrs/ day	days/ wk	Qty.	hrs/ day	days/ wk
Below Grade																		
Auger	2	10	6	10	10	6	10	10	6	20	10	6	10	10	6	10	10	6
Backhoe	1	10	6	2	10	6	2	10	6	4	10	6	2	10	6	2	10	6
Front Loader	1	10	6	1	10	6	1	10	6	2	10	6	1	10	6	1	10	6
Ditch Witch	1	10	6	2	10	6	2	10	6	4	10	6	2	10	6	2	10	6
Concrete Truck	2	10	6	10	10	6	10	10	6	20	10	6	10	10	6	10	10	6
Water Truck	1	10	6	1	10	6	1	10	6	1	10	6	1	10	6	1	10	6
Dump Truck	1	10	6	1	10	6	1	10	6	4	10	6	1	10	6	1	10	6
Trailer	2	10	6	2	10	6	2	10	6	2	10	6	2	10	6	2	10	6
Crew Truck/Car	2	10	6	4	10	6	4	10	6	8	10	6	4	10	6	4	10	6
Hauler	1	10	6	1	10	6	1	10	6	1	10	6	1	10	6	1	10	6
Skid Steer Loader	1	10	6	1	10	6	1	10	6	2	10	6	1	10	6		10	6
Batch Plant	1	10	6	1	10	6	1	10	6	1	10	6	1	10	6	1	10	6
Drill Rig	1	10	6	1	10	6	1	10	6	2	10	6	1	10	6	1	10	6
Truck with Trailer	2	10	6	4	10	6	4	10	6	4	10	6	4	10	6	4	10	6
Compressor	1	10	6	2	10	6	2	10	6	4	10	6	2	10	6	2	10	6
Construction Fork	1	10	6	1	10	6	1	10	6	2	10	6	1	10	6	1	10	6
980 Loader	1	10	6	1	10	6	1	10	6	2	10	6	1	10	6		10	6
Vibrating Roller	1	10	6	1	10	6	1	10	6	2	10	6	1	10	6		10	6
Inspection Truck	1	10	6	1	10	6	1	10	6	1	10	6	1	10	6	1	10	6
Above Grade																		
Crane	1	10	6	1	10	6	1	10	6	1	10	6	1	10	6	1	10	6
Bucket Truck	2	10	6	2	10	6	2	10	6	4	10	6	2	10	6	2	10	6
Boom Truck	2	10	6	2	10	6	2	10	6	3	10	6	2	10	6	2	10	6
Fork Lift	1	10	6	1	10	6	1	10	6	2	10	6	1	10	6	1	10	6

Table B-18. Average and Peak Construction Traffic

Vehicle Type	Average Daily Round Trips	Peak Daily Round Trips
Segment 1W(a)		
Construction Workers	13	20
Delivery	2	4
Heavy Trucks	7	11
Water Trucks	2	4
Total	**24**	**39**
Segment 1W(c)		
Construction Workers	13	20
Delivery	2	4
Heavy Trucks	7	11
Water Trucks	2	4
Total	**24**	**39**
Segment 2		
Construction Workers	35	50
Delivery	5	8
Heavy Trucks	18	27
Water Trucks	5	8
Total	**63**	**93**
Segment 3		
Construction Workers	35	50
Delivery	5	8
Heavy Trucks	18	27
Water Trucks	5	8
Total	**63**	**93**
Segment 3A		
Construction Workers	13	20
Delivery	2	4
Heavy Trucks	7	11
Water Trucks	2	4
Total	**24**	**39**
Segment 4		
Construction Workers	35	50
Delivery	5	8
Heavy Trucks	18	27
Water Trucks	5	8
Total	**63**	**93**
Segment 5		
Construction Workers	25	40
Delivery	3	6
Heavy Trucks	13	21
Water Trucks	3	6
Total	**44**	**73**
Segment 6		
Construction Workers	18	30
Delivery	2	4
Heavy Trucks	9	15
Water Trucks	2	4
Total	**31**	**53**

Table B-18. Average and Peak Construction Traffic (continued)

Vehicle Type	Average Daily Round Trips	Peak Daily Round Trips
Segment 7		
Construction Workers	25	40
Delivery	3	6
Heavy Trucks	13	21
Water Trucks	3	6
Total	**44**	**73**
Segment 8		
Construction Workers	25	40
Delivery	3	6
Heavy Trucks	13	21
Water Trucks	3	6
Total	**44**	**73**
Segment 9		
Construction Workers	25	40
Delivery	3	6
Heavy Trucks	13	21
Water Trucks	3	6
Total	**44**	**73**
Segment 10		
Construction Workers	25	40
Delivery	3	6
Heavy Trucks	13	21
Water Trucks	3	6
Total	**44**	**73**
Windstar Substation		
Construction Workers	2	4
Delivery	2	4
Heavy Trucks	8	12
Water Trucks	8	10
Total	**20**	**30**
Dave Johnston Substation		
Construction Workers	2	4
Delivery	2	4
Heavy Trucks	8	12
Water Trucks	8	10
Total	**20**	**30**
Heward Substation		
Construction Workers	2	4
Delivery	2	4
Heavy Trucks	8	12
Water Trucks	8	10
Total	**20**	**30**
Shirley Basin Substation		
Construction Workers	2	4
Delivery	2	4
Heavy Trucks	8	12
Water Trucks	8	10
Total	**20**	**30**

Table B-18. Average and Peak Construction Traffic (continued)

Vehicle Type	Average Daily Round Trips	Peak Daily Round Trips
Aeolus Substation		
Construction Workers	2	4
Delivery	2	4
Heavy Trucks	8	12
Water Trucks	8	10
Total	**20**	**30**
Anticline Substation		
Construction Workers	2	4
Delivery	2	4
Heavy Trucks	8	12
Water Trucks	8	10
Total	**20**	**30**
Jim Bridger 345-kV Yard		
Construction Workers	2	4
Delivery	2	4
Heavy Trucks	8	12
Water Trucks	8	10
Total	**20**	**30**
Populus Substation		
Construction Workers	2	4
Delivery	2	4
Heavy Trucks	8	12
Water Trucks	8	10
Total	**20**	**30**
Borah Substation		
Construction Workers	2	4
Delivery	2	4
Heavy Trucks	8	12
Water Trucks	8	10
Total	**20**	**30**
Cedar Hill Substation		
Construction Workers	2	4
Delivery	2	4
Heavy Trucks	8	12
Water Trucks	8	10
Total	**20**	**30**
Midpoint Substation		
Construction Workers	2	4
Delivery	2	4
Heavy Trucks	8	12
Water Trucks	8	10
Total	**20**	**30**
Hemingway Substation		
Construction Workers	2	4
Delivery	2	4
Heavy Trucks	8	12
Water Trucks	8	10
Total	**20**	**30**

Construction access will occur at several locations along the transmission line route, resulting in dispersed construction traffic. The construction contractor will be required to develop traffic plan as outlined in Appendix L of the POD. The equipment required for

transmission line construction is similar for the 500-kV, 345-kV, and 230-kV lines, although the equipment needed for 345-kV and 230-kV line construction is generally smaller than for 500-kV construction. The following is a summary of anticipated equipment to be used for each construction activity. Survey work only requires the use of pickup trucks or ATVs. Road construction will utilize pickups, bulldozers, motor graders, and water trucks. To dig holes and directly embed the 230-kV and 345-kV H-frame poles or install 500-kV foundations it is anticipated that pickup trucks, 2-ton trucks, hole diggers, bulldozers, concrete trucks, water trucks, carry alls, cranes, hydro crane, wagon drill, dump trucks, and front-end loaders will be used. Hauling steel, or poles, braces and hardware for the 230-kV and 345-kV lines to the structure sites requires the use of steel haul trucks, carry alls, cranes, and forklifts. For assembly and erection of structures it is anticipated that pickup trucks, 2-ton trucks, carry alls, cranes, and a heavy lift helicopter may be used. Wire installation requires the most equipment including pickups, wire reel trailers, diesel tractors, cranes, 5-ton boom trucks, splicing trucks, three drum pullers, single drum pullers, tensioners, sagging dozers, carry alls, static wire reel trailers, and a light helicopter. Final cleanup, reclamation, and restoration utilize pickups, 2-ton trucks, bulldozers, motor graders, dump trucks, front-end loaders, and water trucks. The highest level of traffic will occur when the wire stringing operations begin while several other operations are occurring at the same time which will likely include excavating holes, installing foundations, hauling steel, assembling structures, and erecting structures.

For the substation work, the highest level of traffic will be during site grading and foundation installation. As tabulated in Table B-19, varying amounts of solid waste and soil not suitable for re-use at each site will have to be disposed of off-site at a remote location. Dump trucks will be leaving and returning to the site on a constant basis each day for the duration of the site grading. The volume of concrete required at each site will vary in proportion to the size of the substation site, and may be up to 7,000 cubic yards of concrete at the very large substations. Delivering, placing, and finishing concrete is labor intensive. Once concrete placement is complete, traffic on the surrounding roads will subside. Workers arrive in the morning and leave at the end of the day. The balance of daily traffic is material deliveries from storerooms, which will probably be one or two trips per day. Each substation requires the delivery of permitted loads such as transformers and/or reactors. Each reactor or transformer bank delivered will require four large multiple-axle lowboy trucks. Delivery will be scheduled to match the completion of their respective foundations.

3.7.3 Removal of Facilities and Waste Disposal

Substation and ROW construction generate a variety of solid wastes including concrete, hardware, and wood debris. The solid wastes generated during construction will be recycled or hauled away for disposal. Excavation along the ROW and at substations generates solid wastes that could potentially be used as fill; however, some of the excavated material will be removed for disposal. Excavated material that is clean and dry will be spread along the ROW. The volumes shown in Table B-19 shows that no waste is expected to be hauled away and not disposed of in the ROW for each segment during construction of Gateway West.

Table B-19. Solid Waste Generation from Construction Activities

Activity	Segment 1W(a) Excavation Removal Total (yard³)	Segment 1W(a) Other Solid Waste Total (yard³)	Segment 1W(c) Excavation Removal Total (yard³)	Segment 1W(c) Other Solid Waste Total (yard³)	Segment 2 Excavation Removal Total (yard³)	Segment 2 Other Solid Waste Total (yard³)	Segment 3[f] Excavation Removal Total (yard³)	Segment 3[f] Other Solid Waste Total (yard³)	Segment 4 Excavation Removal Total (yard³)	Segment 4 Other Solid Waste Total (yard³)
230-kV Structure Installation										
230-kV Sgl Ckt - H-frame Family (includes angle & dead-ends)	0	163,500	0	160,100	-	-	-	-	-	-
500-kV Structure Installation										
500-kV Sgl Ckt - Tangent Lattice Tower	-	-	-	-	0	114,765	0	57,320	0	246,763
500-kV Sgl Ckt - Small Angle Lattice Tower	-	-	-	-	0	16,395	0	8,189	0	35,252
500-kV Sgl Ckt - Medium Angle Lattice Tower	-	-	-	-	0	8,197	0	4,094	0	17,626
500-kV Sgl Ckt - Medium Dead-End Lattice Tower	-	-	-	-	0	16,395	0	8,189	0	35,252
500-kV Sgl Ckt - Heavy Dead-End Lattice Tower	-	-	-	-	0	8,197	0	4,094	0	17,626

Activity	Segment 6 Excavation Removal Total (yard³)	Segment 6 Other Solid Waste Total (yard³)	Segment 7 Excavation Removal Total (yard³)	Segment 7 Other Solid Waste Total (yard³)	Segment 8 Excavation Removal Total (yard³)	Segment 8 Other Solid Waste Total (yard³)	Segment 9 Excavation Removal Total (yard³)	Segment 9 Other Solid Waste Total (yard³)	Segment 10 Excavation Removal Total (yard³)	Segment 10 Other Solid Waste Total (yard³)
230-kV Structure Installation										
230-kV Sgl Ckt - H-frame Family (includes angle & dead-ends)	-	-	-	-	-	-	-	-	-	-
500-kV Structure Installation										
500-kV Sgl Ckt - Tangent Lattice Tower	0	2,933	0	147,530	0	164,248	0	198,271	0	41,355
500-kV Sgl Ckt - Small Angle Lattice Tower	0	419	0	21,076	0	23,464	0	28,324	0	5,908
500-kV Sgl Ckt - Medium Angle Lattice Tower	0	210	0	10,538	0	11,732	0	14,162	0	2,954
500-kV Sgl Ckt - Medium Dead-End Lattice Tower	0	419	0	21,076	0	23,464	0	28,324	0	5,908
500-kV Sgl Ckt - Heavy Dead-End Lattice Tower	0	210	0	10,538	0	11,732	0	14,162	0	2,954

Total Solid Waste by Substation (cubic yards)

Activity	Windstar Substation	Heward Substation	Shirley Basin Substation	Aeolus Substation	Dave Johnston Substation	Anticline Substation	Jim Bridger 345-kV Yard	Populus Substation	Borah Substation	Cedar Hill Substation	Midpoint Substation	Hemingway Substation
Substation Grading/ Site Work	250	250	250	8,700	50	16,200	250	2,500	1,400	5,400	4,800	-
Substation Construction (Below Grade)	65	65	65	474	18	1272	65	601	148	1,075	729	229
Substation Construction (Above Grade)	144	144	144	192	120	432	144	192	192	432	192	192

The majority of waste associated with substation construction results from spoils created during site grading. The values shown in Table B-19 reflect the amount of vegetation and rock larger than 6 inches in diameter that cannot be processed and converted into backfill for compaction. Very little of the soil excavated during foundation installation is waste product. Above-grade waste will be packing material such as crates, pallets, and paper wrapping to protect equipment during shipping. It is assumed a 12-yard dumpster will be filled once a week with waste material for the duration of each substation project.

3.7.4 Construction Schedule

The Companies intend to continue to refine the design of the Gateway West during the BLM approval process in order to immediately commence construction if the Project is approved. Final engineering surveys will determine the exact locations of towers, access roads, and other features prior to the start of construction and will be included in the Plan of Development. Due to the broad scope of construction, the varied nature of construction activities, and the geographic diversity of the Project area, the Companies intend to hire multiple contractors to complete Project work within the projected timeframe and in accordance with industry performance standards. The Project may involve up to three separate EPC contracts. Table B-20 shows the planned construction start and end dates for each phase. Multiple segments will be under construction at the same time. The Companies developed a Project construction schedule based on this strategy.

Although the construction rate of progress is reduced in the winter, the Companies have planned an aggressive schedule and it is anticipated that construction will continue through the winter months in the lower-elevation areas of the Project, except during winter storms. In the higher-elevation areas of the Project, winter storms and snow will limit access to the ROW, for example in Segment 4 in western Wyoming and eastern Idaho. In these areas, it is expected that construction will be suspended on some portions of the ROW during the peak winter months and construction resources will either be demobilized or shifted to other segments of the Project.

Transmission line construction commences with contractor mobilization. The contractor will mobilize equipment and personnel to the construction site at various stages in the Project schedule depending on operational requirements. This will cumulatively require approximately 6 weeks throughout the schedule for each segment. Construction management, engineering support, inspection, materials handling, and administration are required throughout the Project. First, surveyors start at one end of the segment and stake the locations of access roads. Road construction can start 1 to 2 weeks after the surveyors begin, which may require clearing in higher elevations where tree removal is required prior to road construction. After a couple of weeks of road construction another survey crew can begin staking the structure locations. A week or two after the survey crew starts staking structure locations, excavation of holes for foundations for 500-kV towers, or for directly embedded poles for 230-kV or 345-kV structures, can begin. For 500-kV construction, the installation of the concrete pier foundations would begin within the next couple of weeks. The foundations need time to cure and develop to full structural strength (i.e., compression capacity) before lattice towers can be

Table B-20. Construction Schedule

Segment Number	Segment or Substation Name	Primarily Wyoming		Idaho	
		Start June 2015	End Dec 2018	Start June 2017	End Dec 2021
	Windstar Substation	Windstar Expansion			
	Dave Johnston 230-kV Substation	Dave Johnston 230-kV Substation			
	Heward Substation	Heward Substation			
	Aeolus Substation	Aeolus Substation			
	Populus Substation	Populus Expansion			
	Anticline Substation	Anticline Substation and 345-kV bays at existing Jim Bridger Substation			
1W(a)	Windstar – Aeolus #1	Single-Circuit 230-kV and rebuild a short section of the existing single-circuit 230-kV line			
1W(c)	Dave Johnston – Heward –Aeolus	Rebuild the existing single circuit 230-kV and build a short section a new single-circuit 230 kV line			
2	Aeolus – Creston	Single-Circuit 500-kV			
3	Creston – Anticline	Single-Circuit 500-kV			
3A	Anticline – Jim Bridger	Single-Circuit 345-kV			
4	Anticline – Populus	Single-Circuit 500-kV			
	Populus Substation			Populus Expansion	
	Cedar Hill Substation			Cedar Hill Substation	
	Hemingway Substation			Hemingway Expansion	
7	Populus – Cedar Hill			Single-Circuit 500-kV	
9	Cedar Hill – Hemingway			Single-Circuit 500-kV	
10	Midpoint – Cedar Hill			Single-Circuit 500-kV	
	Borah Substation			Borah Expansion	
	Midpoint Substation			Midpoint Expansion	
	Hemingway Substation			Hemingway Expansion	
5	Populus – Borah			Single-Circuit 500-kV	
6	Borah – Midpoint [1]			Existing single-circuit	
8	Midpoint – Hemingway			Single-Circuit 500-kV	

installed. Five to six weeks after foundation installation has begun, lattice tower assembly and erection can begin. For 230-kV and 345-kV construction, structure assembly and setting can begin immediately after the excavation of holes has begun. For 230-kV, 345-kV,and 500-kV construction, the wire installation crews start approximately 8 to 12 weeks after assembly and erection/setting begins. This is followed by final cleanup, reclamation, and restoration.

Substation construction includes five activities: 1) site grading (grading and access road development), 2) below-grade construction (primarily the installation of foundations, 3) above-grade construction (steel erection and building construction), 4) electrical (installation and termination of control wiring), and 5) testing (functional testing of control and monitoring schemes). Typically, these activities overlap and complement each other, allowing the construction of a substation to proceed more quickly than line construction. It is estimated that the site grading activity and access road work for

Gateway West substations will take 4 to 8 weeks to complete, depending on the size of the site.

Below-grade construction can be completed in 3 months or less for all substations that are expansions of existing substations. In these cases the basic infrastructure is already in place, having been installed with the initial substation and designed for the future expansion requirements. Only the new substations will take longer to complete.

Above-grade construction duration is highly dependent on the level of construction force the contractor chooses. Due to the size of each station, many crews can work on steel erection and equipment assembly without interfering with each other. It is estimated that for the majority of the substations the erection of steel, bus assembly, and major equipment assembly can be completed in between 4 months for the smaller substations and 6 months for the larger substations.

Electrical construction is a long and labor-intensive task. Although multiple crews can work in a yard at any given time, the space in a control building is very limited and will determine the length of this task. In the case of each of these stations, given the size and type of equipment to be installed, there will be miles of cable to be pulled into conduit and duct banks and thousands of connections to be made and double checked prior to the start of testing. New substations will take longer than existing substations that already have the basic infrastructure in place.

Prior to starting construction, the Companies may be required to conduct on-site surveys in accordance with applicable protocols or mitigation measures adopted by BLM and other agencies as Project conditions. Accordingly, adjustments might occur to the Project schedule as necessary to avoid sensitive resources. Pre-construction activities, including pre-construction environmental surveys, materials procurement, design, contracting, ROW acquisition, and permitting efforts, are not shown in the summary schedule.

The schedule is predicated upon the Companies' ability to complete the following tasks in a timely manner:

- Secure all necessary permit approvals;
- Secure agency support;
- Complete biological and cultural survey work;
- Construct within environmental time constraints;
- Order and receive equipment;
- Secure construction contractor resources and associated construction equipment; and
- Maintain continuous construction activity with no delay due to environmental, administrative, or legal issues.

4.0 SYSTEM OPERATIONS AND MAINTENANCE

The 500-kV transmission lines to be constructed as part of the Project will comprise critical infrastructure of the RMP and Idaho Power transmission systems, and of the western U.S. electrical grid. Limiting the duration of unplanned outages and planning

for the use of live-line maintenance techniques to minimize the requirement for any outages is an important part of the design, construction, and operations/maintenance requirements for this Project.

4.1 Routine System Operation and Maintenance

The goal of the Companies is to provide their customers with a reliable supply of electricity while maintaining the overall integrity of the regional electrical grid. The Companies' obligation to maintain reliable operation of the electrical system is documented in the Companies' agreements with the various states through the public service commissions and is directed through compliance with industry standard codes and practices such as the NESC (ANSI C2), which governs the design and operation of high-voltage electric utility systems.

In 2005, Congress passed the Energy Policy Act of 2005, which provided a regulatory basis for the implementation of specific incentives (and penalties) for maintaining reliable service, among other issues. As a result of the passage of the Act, the FERC selected the NERC to act as the enforcement agency for compliance with electric utility reliability and operating standards, among other issues. The Companies are required to be in compliance with the various reliability standards promulgated through the implementation of the NERC policies and procedures. Additionally, PacifiCorp and Idaho Power are governed by the WECC standards that may be in addition to or more stringent than those currently required by NERC (see also Section 1.3.3.3 for further description of these regulatory agencies). In response, the Companies have prepared internal operation and maintenance policies and procedures designed to meet the requirements of the NERC, WECC, and the state public utility commissions, while remaining in compliance with the applicable codes and standards with respect to maintaining the reliability of the electrical system.

Operations and maintenance activities include transmission line patrols, climbing inspections, structure and wire maintenance, insulator washing in selected areas as needed, and access roads repairs. The Companies will keep necessary work areas around structures clear of vegetation and will limit the height of vegetation along the ROW. Periodic inspection and maintenance of each of the substations and communications facilities is also a key part of operating and maintaining the electrical system. The following sections provide details on the anticipated operation and maintenance activities for Gateway West.

After the transmission line has been energized, land uses that are compatible with safety regulations will be permitted in and adjacent to the ROW. Existing land uses such as agriculture and grazing are generally permitted within the ROW. Incompatible land uses within the ROW include construction and maintenance of inhabited dwellings and any use requiring changes in surface elevation that would affect electrical clearances of existing or planned facilities.

Land uses that comply with local regulations will be permitted adjacent to the ROW. Compatible uses of the ROW on public lands would have to be approved by the appropriate agency. Permission to use the ROW on private lands will have to be obtained from the utility owning the transmission line.

4.1.1 Routine System Inspection, Maintenance, and Repair

Regular inspection of transmission lines, substations, and support systems is critical for safe, efficient, and economical operation of the Project.

4.1.2 Transmission Line Maintenance

Regular ground and aerial inspections will be performed in accordance with the Companies' established policies and procedures for transmission line inspection and maintenance. The Companies' transmission lines and substations will be inspected for corrosion, equipment misalignment, loose fittings, vandalism, and other mechanical problems. The need for vegetation management will also be determined during inspection patrols.

Inspection of the entire transmission line system is conducted semi-annually. Aerial inspection is conducted by helicopter semi-annually and requires two or three crew members, including the pilot. Detailed ground inspections take place on an annual basis using access roads to each structure. Ground inspection uses 4x4 trucks or 4x4 ATVs. The inspector assesses the condition of the transmission line and hardware to determine if any components need to be repaired or replaced, or if other conditions exist that require maintenance or modification activities. The inspector also notes any unauthorized encroachments and trash dumping on the ROW that could constitute a safety hazard. The inspector accesses each of the structure locations along each line and uses binoculars and spotting scopes to perform this inspection.

4.1.3 Hardware Maintenance and Repairs

Routine maintenance activities are ordinary maintenance tasks that have historically been performed and are regularly carried out on a routine basis. The work performed is typically repair or replacement of individual components (no new ground disturbance), performed by relatively small crews using a minimum of equipment, and usually is conducted within a period from a few hours up to a few days. Work requires access to the damaged portion of the line to allow for a safe and efficient repair of the facility. Equipment required for this work may include 4-wheel-drive trucks, material (flatbed) trucks, bucket trucks (low reach), boom trucks (high reach), or personnel lifts. This work is scheduled and is typically required due to issues found during inspections. Typical items that may require periodic replacement on a 500-kV tower include insulators, hardware or tower members. It is expected that these replacements will be required infrequently.

The Companies plan to conduct maintenance on the critical 500-Kv, 345-kV and 230-kV system using live line maintenance techniques. Maintenance on the transmission lines can be completed safely using live line techniques thereby avoiding an outage to the critical transmission line infrastructure. High reach bucket trucks along with other equipment are used to conduct these activities. For the 500-kV lattice tower structures, this requires that adequate space be available at each structure site so that the high reach bucket truck can be positioned to one side or the other of the structure and reach up and over the lower phases to access the upper center phase for live-line maintenance procedures. For the 230-kV H-frame structures, this requires that adequate space be available at each structure site so that a bucket truck can be positioned to access the outside phases. To allow room at each structure for these

activities, in low slope areas a pad area is required with the structure in the center of 250 feet (ROW width) by 100 feet for the single-circuit 500-kV structure, 150 feet by 50 feet for the 345-kV H-frame structure, and 125 feet by 50 feet for the 230-kV H-frame structure. Figures B-16 through B-18 depict the space requirements for live-line maintenance. The size and location of these required pads near the structures may vary depending on the side slope and access road at each site. The work areas and pads are cleared to the extent needed to safely complete the work. These pads remain in place after construction, but are revegetated after the initial construction is completed.

4.1.4 Access Road and Work Area Repair

ROW repairs include grading or repair of existing maintenance access roads and work areas, and spot repair of sites subject to flooding or scouring. Required equipment may include a grader, backhoe, four-wheel-drive pickup truck, and a tracked-loader or bulldozer. The cat-loader has steel tracks whereas the grader, backhoe, and truck typically have rubber tires. Repairs to the ROW are scheduled as a result of line inspections, or occur in response to an emergency situation.

4.1.5 Vegetation Management

The Companies must maintain work areas adjacent to electrical transmission structures and along the ROW for vehicle and equipment access necessary for operations, maintenance, and repair, including for live-line maintenance activities as described in Section 3.1.3, under Hardware Maintenance and Repairs. Figures B-16 through B-19 illustrate the typical equipment and space needed for live-line maintenance. During scheduled vegetation management activities, tall growing species, large shrubs and other obstructions are removed near structures to facilitate a safe working environment for inspection and maintenance of equipment and to ensure system reliability. At a minimum, trees and large brush are cleared within a 25-foot radius of the base or foundation of all electrical transmission structures, and to accommodate equipment pads to conduct live line maintenance operations as noted.

Vegetation management practices along the ROW will be in accordance with the Idaho Power and PacifiCorp clearing specifications and vegetation management plans (Idaho Power 2008; PacifiCorp 2007c; and Appendix R). Much of the transmission line route traverses arid country characterized by low-growing vegetation, while higher elevations receive more precipitation and exhibit more vegetation. The wire-border zone method to controlling vegetation is an approach used by PacifiCorp (2007c). This method results in two zones of clearing and revegetation. The wire zone is the linear area along the ROW under the wires and extending 10 feet outside of the outermost phase conductor. After initial clearing, vegetation in the wire zone will be maintained to consist of native grasses, legumes, herbs, ferns, and other low-growing shrubs that remain under 5 feet tall at maturity. The border zone is the linear area along each side of the ROW extending from the wire zone to the edge of the ROW. Vegetation in the border zone will be maintained to consist of tall shrubs or short trees (up to 25 feet high at maturity), grasses, and forbs. These cover plants benefit the ROW by competing with and excluding undesirable plants. The width of the wire and border zones is depicted in Figure B-19 for the 230-kV and 345-kV H-frames and 500-kV single -circuit tower line segments. During operations, vegetation growth will be monitored and managed to

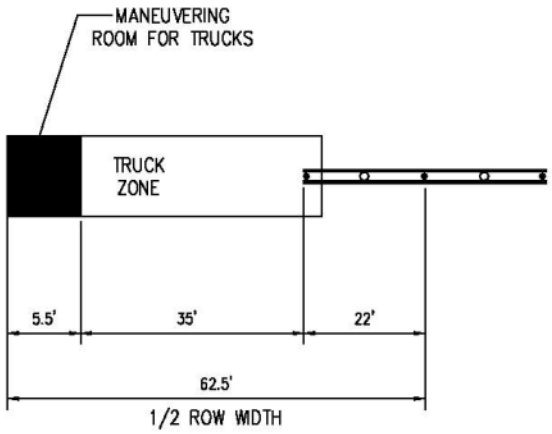

SECTION A–A
N.T.S.

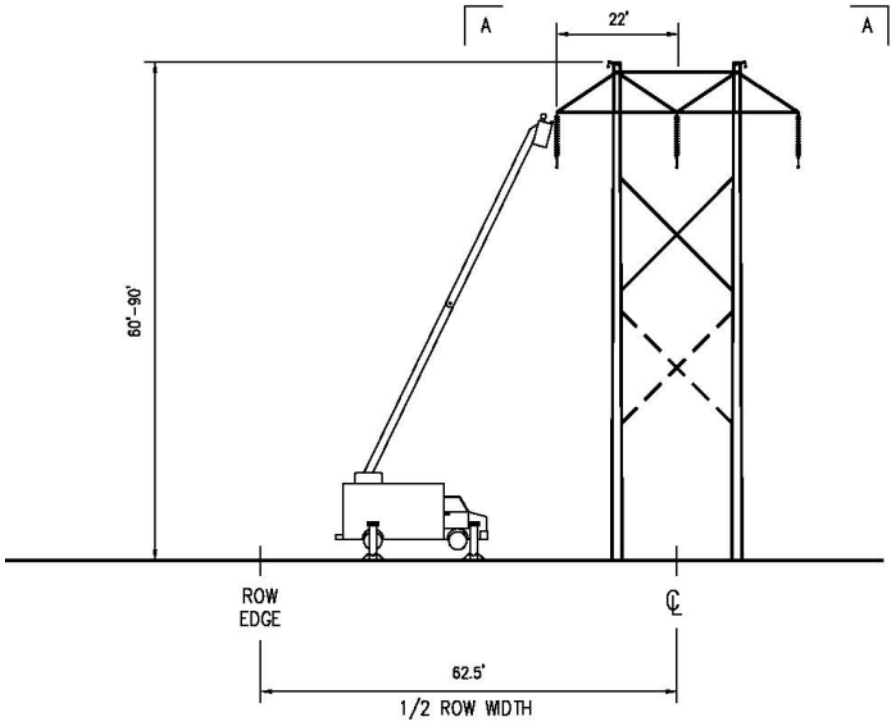

PROFILE
N.T.S.

Figure B-16. Live-line Maintenance Space Requirements, 230 kV

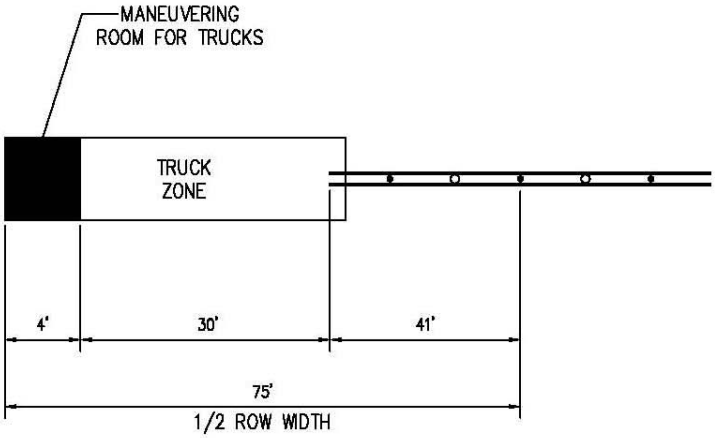

SECTION A–A
N.T.S.

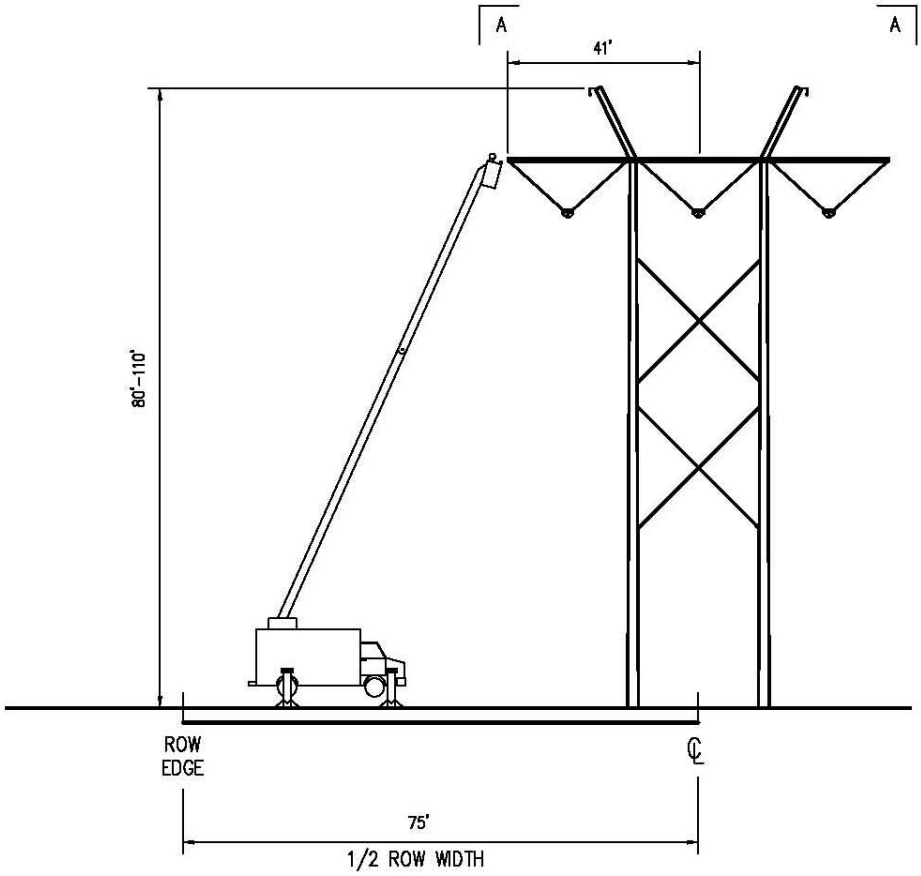

PROFILE
N.T.S.

Figure B-17. Live-line Maintenance Space Requirements, 345 kV

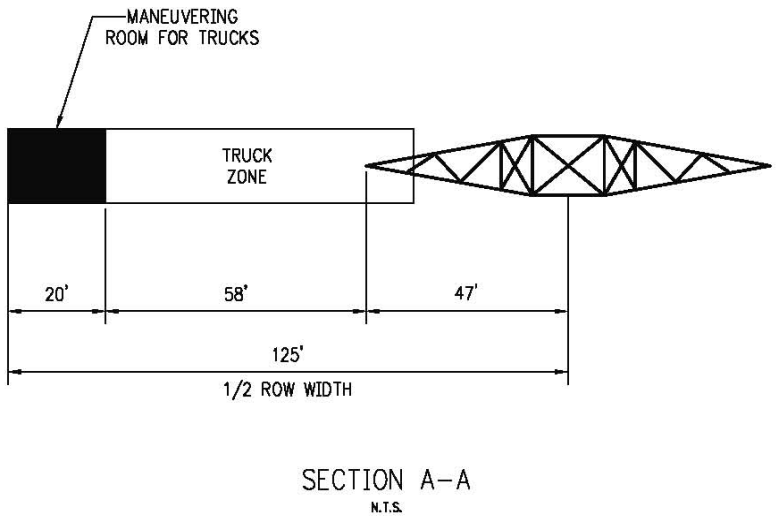

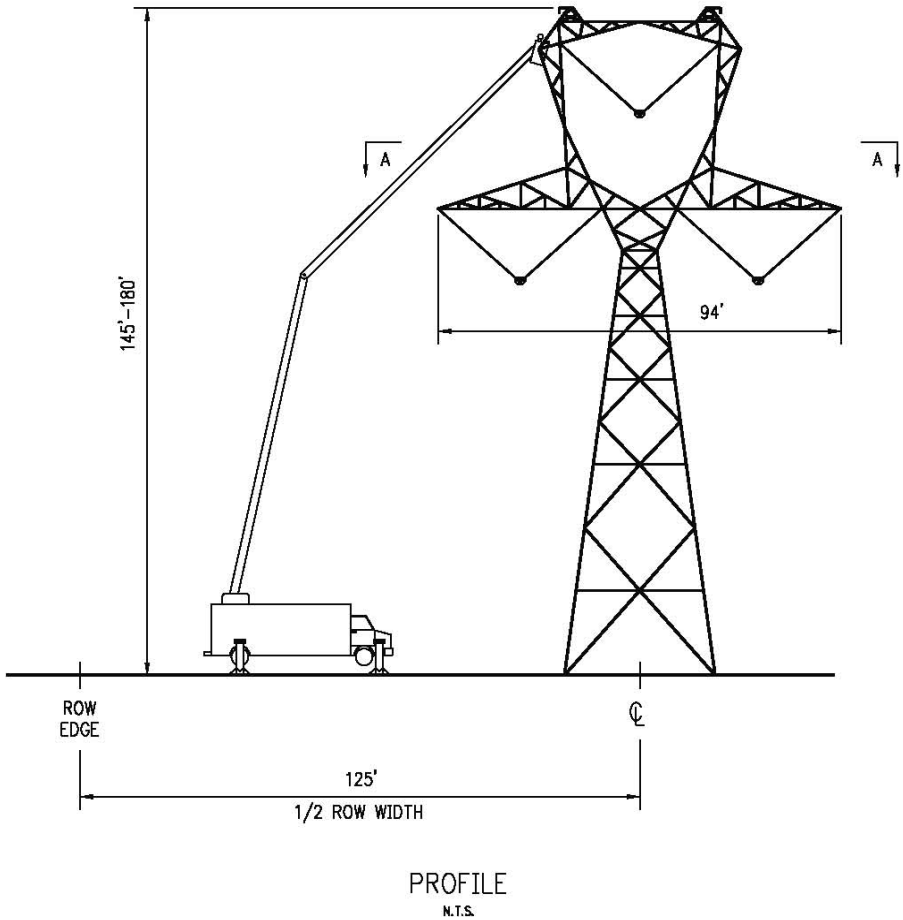

Figure B-18. Live-line Maintenance Space Requirements, Single-Circuit 500 kV

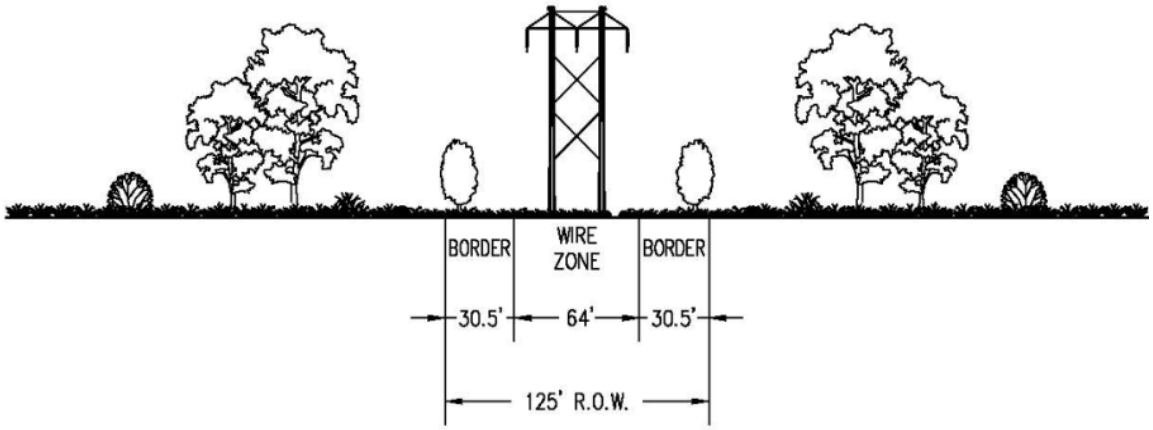

Single Circuit 230 kV

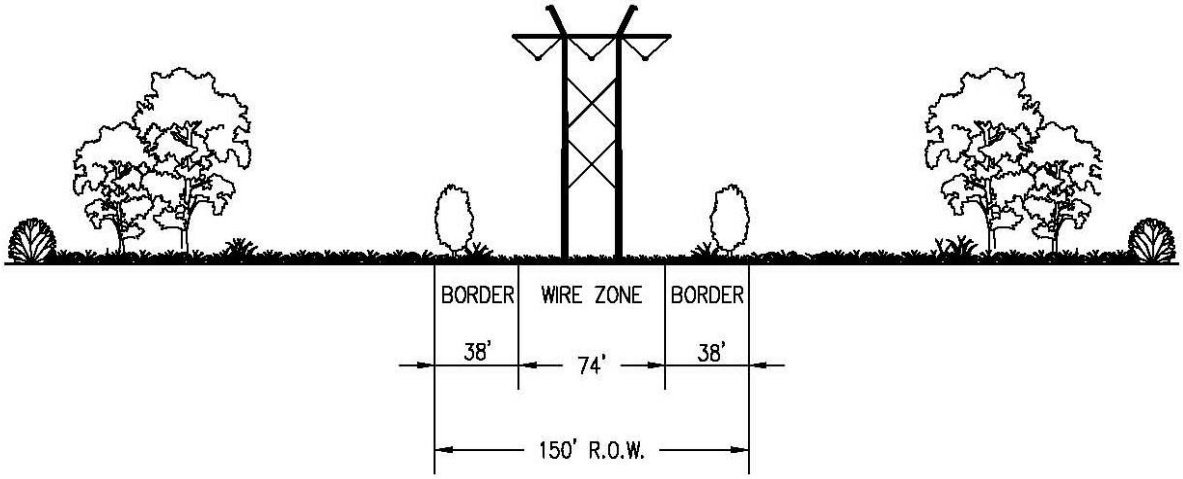

Single-Circuit 345 kV

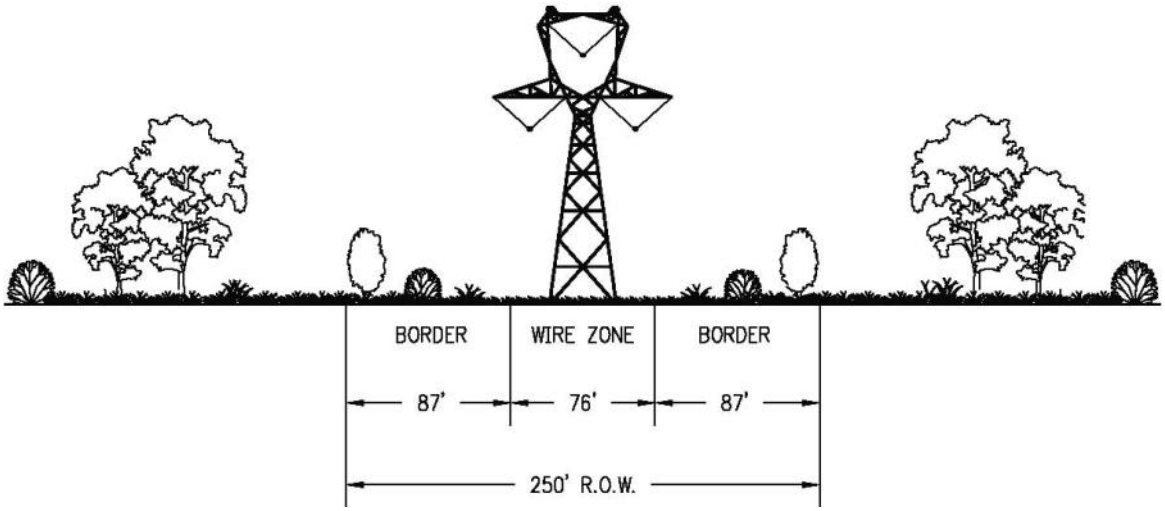

Single-Circuit 500 kV

Figure B-19. Right-of-Way Vegetation Management

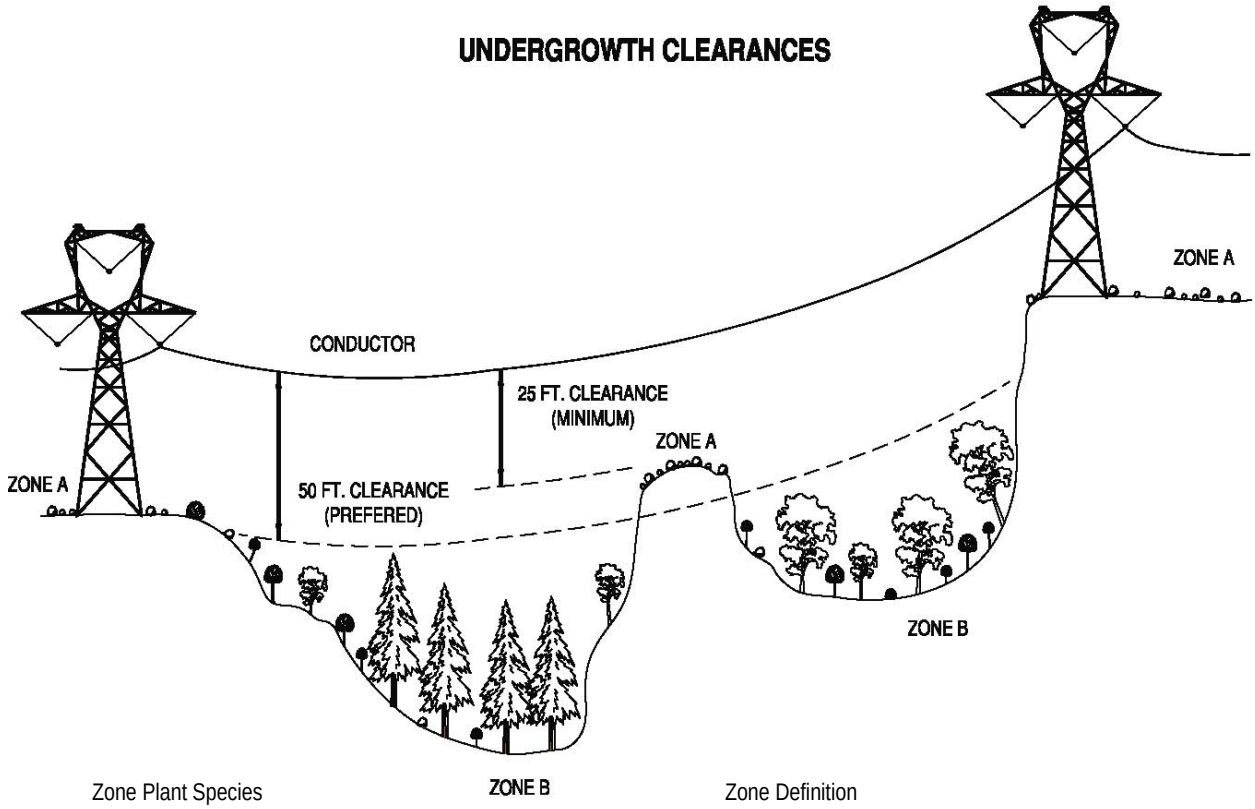

Zone Plant Species

Zone A: Grasses, legumes, herbs, ferns and low growing shrubs.

Zone B: all deciduous and conifer trees.

Zone Definition

Zone A: When the conductor to ground clearance is less than 50', all tree species should be removed.

Zone B: When the conductor to ground clearance is greater than 50', all tree species should be removed if they have less than 50' of clearance, 25' minimum.

Figure B-20. Right-of-Way Vegetation Management in Steep Terrain

maintain the wire-border zone objectives. Idaho Power's approach is to remove all tree species within the ROW where the conductor ground clearance is less than 50 feet, leaving grasses, legumes, herbs, ferns, and low-growing shrubs within the ROW. When conductor ground clearance is greater than 50 feet, for example a canyon or ravine, the Companies make provisions for allowing trees and shrubs to remain, provided they do not violate minimum clearance thresholds set forth by their respective companies.

Vegetation will be removed using mechanical equipment such as chain saws, weed trimmers, rakes, shovels, mowers, and brush hooks. Clearing efforts in heavy growth areas will use equipment such as a Hydro-Ax or similar. The duration of activities and the size of crew and equipment required depends on the amount and size of the vegetation to be trimmed or removed.

In selected areas, herbicides may be used to control noxious weeds and to meet vegetation management objectives. All herbicide applications will be performed in accordance with federal, state, and local regulations, and in compliance with managing land agency requirements.

4.1.6 Substation and Regeneration Station Maintenance

Substation and regeneration station monitoring and control functions are performed remotely from the Companies' central operations facilities located at PacifiCorp's operation center in Portland, Oregon, and by Idaho Power from their operation center in Boise, Idaho. Unauthorized entry into substations or regeneration stations is prevented with the provision of fencing and locked gates. Warning signs will be posted and entry to the operating facilities will be restricted to authorized personnel. Gateway West substations and regeneration stations will not be staffed; however, a remotely monitored security system will be installed. Several forms of security are planned for each of the locations, although the security arrangements at each of the substations or regeneration stations may differ somewhat. Security measures may include fire detection in the control building via the remote monitoring system; alarming for forced entry; and a perimeter security system coupled with remote sensing infrared camera equipment in the fenced area of the station to provide visual observation/confirmation to the system operator of disturbances at the fence line.

Maintenance activities include equipment testing, equipment monitoring and repair, and emergency and routine procedures for service continuity and preventive maintenance. It is anticipated that maintenance at each substation will require approximately six trips per year by a 2- to 4-person crew. Routine operations require one or two workers in a light utility truck to visit the substations monthly. Typically, once per year a major maintenance inspection takes place requiring up to 15 personnel for 1 to 3 weeks. Regeneration stations are visited every 2 to 3 months by one individual in a light truck to inspect the facilities. Annual maintenance is performed by a two man crew in a light truck over a 2- to 5-day period. If substation landscaping is required by the permitting agency, drought-tolerant plant materials will be used to minimize watering requirements after plant establishment.

Safety lighting at the substations will be provided inside the substation fence for the purpose of emergency repair work. Because night activities are not expected to occur more than once per year, the safety lighting inside the substation fence will normally be turned off. One floodlight, mounted near the entry gate to safely illuminate the substation entry gate, may be left on during nighttime hours.

4.2 Emergency Response

The operation of the system is remotely managed and monitored from control rooms at PacifiCorp's operation center in Portland, Oregon, and by Idaho Power from their operation center in Boise, Idaho. Electrical outages or variations from normal operating protocols are sensed and reported at these operation centers. As well, the substations are equipped with remote monitoring, proximity alarms, and in some cases video surveillance.

The implementation of routine operation and maintenance activities on powerlines minimizes the need for most emergency repairs. Emergency maintenance activities are often those activities necessary to repair natural hazard, fire, or human-caused damages to a line. Such work is required to eliminate a safety hazard, prevent imminent damage to the powerline, or restore service if there is an outage. In an emergency, the Companies must respond as quickly as possible to restore power.

The equipment necessary to carry out emergency repairs is similar to that necessary to conduct routine maintenance, in most cases. Emergency response to outages may require additional equipment to complete the repairs. For example, where the site of the outage is remote, helicopters may be used to respond quickly to emergencies.

In practice, as soon as an incident is detected, the control room dispatchers notifies the responsible operations staff in the area(s) affected and crews and equipment are organized and dispatched to respond to the incident.

4.2.1 Fire Protection

All federal, state, and county laws, ordinances, rules, and regulations pertaining to fire prevention and suppression will be strictly adhered to. All personnel will be advised of their responsibilities under the applicable fire laws and regulations.

When working on Public Lands, the Companies' employees and contractors will carry required suppression tools and equipment. The Companies or their construction contractor will notify local fire authorities and the BLM or Forest Service (as appropriate) if a Project-related fire occurs within or adjacent to a construction area.

If the Companies become aware of an emergency situation that is caused by a fire on or threatening BLM-managed or NFS lands and that could damage the transmission lines or their operation, they will notify the appropriate agency contact. Specific construction-related activities and safety measures will be implemented during construction of the transmission line to prevent fires and to ensure quick response and suppression if a fire occurs. Typical practices to prevent fires during construction and maintenance/repair activities include brush clearing prior to work, stationing a water truck at the job site to keep the ground and vegetation moist in extreme fire conditions, enforcing red flag warnings, providing "fire behavior" training to all pertinent personnel, keeping vehicles on or within designated roads or work areas, and providing fire suppression equipment and emergency notification numbers at each construction site.

5.0 DECOMMISSIONING

The proposed transmission line has a projected operational life of 50 years or longer. At the end of the useful life of the Project and if the facility were no longer required, the transmission line would be removed from service. At such time, conductors, insulators, and hardware would be dismantled and removed from the ROW. Structures would be removed and foundations removed to below ground surface.

Following abandonment and removal of the transmission line structures and equipment from the ROW, any areas disturbed during line dismantling would be restored and rehabilitated. In the same way, if a substation is no longer required, the substation structures and equipment would be dismantled and removed from the site. The station structures would be disassembled and either re-used at another station or sold for scrap. Major equipment such as breakers, transformers, and reactors would be removed, refurbished, and stored for use at another facility. Foundations would be either abandoned in-place or cut off below ground level and buried.

The Companies describe roads necessary for the operation and maintenance of transmission lines as either access roads or service roads. The sole purpose of service roads is to provide maintenance crews access to the transmission lines. These roads would not exist if the transmission lines did not exist. In contrast, access roads serve a broader purpose, such as contributing to the federal, county, or state road systems. Access roads provide direct or indirect access to the transmission lines, but that access is not their primary purpose. The Companies are responsible for the reclamation of service roads following abandonment and in accordance with the landowner's direction, but are not responsible for reclamation of access roads unless mutually agreed upon by the Companies and the landowner or required by the land management agency. Service roads would be decommissioned following removal of the structures and lines and may be decommissioned while the lines are in-service if they are determined to no longer be necessary.

The Companies may decommission service roads by 1) entering into an agreement with the BLM or Forest Service under which the agencies restore the road located on federal lands and are reimbursed for costs by the Companies, or 2) the Companies or their contractor implement restoration measures as described below.

When a service road has been identified as no longer necessary, the road will be reclaimed and seeded as soon as possible during the optimal seeding season. In some cases, reseeding may not be necessary, given the existing amount of soil compaction and vegetation currently in place. Where required by the land management agency, compacted areas would be ripped and appropriate sediment control measures would be implemented.

The seed mix used for any restoration and revegetation project would be determined in consultation with the landowner or land management agency. All seed and plant material used on federal lands would be approved by the land management agency. All seed would meet all of the requirements of the Federal Seed Act and applicable Idaho and Wyoming laws regarding seeds and noxious weeds. Only seed certified as "noxious weed free" would be used. If requested, the Companies or their contractor would provide the landowner with evidence of seed certification. Any seed mixture would not contain aggressive, non-native species that might invade the site. Where necessary, the surface of the ground would be prepared prior to seeding. Where practical, the Companies would follow these guidelines for preparing the seedbed:

1. The road surface would be cleared of foreign materials, such as garbage, paper, and other materials, but all rocks, limbs, or minor woody debris would be left in place. The Companies or their contractor would prepare the seedbed immediately prior to seeding.
2. Under favorable soil-moisture conditions, a standard disk or spring bar harrow would be used (where ripping is not required) to roughen the topsoil layer to create the desired surface texture before the seed is applied. Dirt clods and chiseled voids resulting from the roughening process increase the surface area for water collection and provide microsites for seed establishment. The soil should be disked or harrowed to no more than 2 inches deep at a time when soil

moisture allows the surface to remain rough, with clods approximately 2 to 4 inches in diameter.

3. Ripping, disking, or harrowing would be performed parallel to surface contours. In this way, downslope alignment of furrows can be avoided. In areas that already have the desired soil characteristics; the seedbed does not need to be prepared.

After the seedbed has been prepared, the Companies or their contractor would broadcast the seed on the disturbed area, after which the seed would be lightly harrowed into the roadbed or raked into the ground. Mulch and fertilizers would be added if necessary. An area would not be seeded when wind velocities prohibit the seed mix from being applied evenly. If the seed does not germinate and establish to an agreed-upon level of vegetation cover (e.g., consistent with adjacent site conditions) after two growing seasons, the Companies or their contractor would reseed during a period acceptable to the landowner. On NFS lands, the Companies would be responsible for monitoring the effectiveness of soil protection and restoration measures and would take corrective measures as needed to ensure long-term soil protection.

Other seeding methods, such as drilling, hydroseeding, or aerial application, may be used depending on the area that requires reclamation and site conditions.

APPENDIX C
ENVIRONMENTAL COMPLIANCE MANAGEMENT PLAN

Appendix C

Framework Environmental Compliance Management Plan

Gateway West Transmission Line Project

Prepared by:

PacifiCorp
1407 W. North Temple
Salt Lake City, UT 84116

and

Idaho Power Company
1221 West Idaho Street
Boise, ID 83702

January 2013

TABLE OF CONTENTS

1.0 INTRODUCTION C-1
2.0 ENVIRONMENTAL COMPLIANCE MANAGEMENT PLAN ELEMENTS AND AUTHORITY C-2
3.0 ROLES AND RESPONSIBILITIES C-3
3.1 Companies C-3
3.1.1 Companies' Project Sponsor C-5
3.1.2 Companies' Project Manager C-5
3.1.3 Environmental Compliance Manager C-5
3.1.4 Companies' Construction Inspector C-6
3.2 BLM and USFS C-6
3.2.1 BLM and USFS Authorized Officers C-7
3.2.2 BLM and USFS Project Manager C-8
3.2.3 Compliance Inspection Contractor C-8
3.2.4 Assistant Compliance Inspection Contractor C-10
3.3 Construction Contractor(s) C-11
3.3.1 Construction Contractor's Project Sponsor C-12
3.3.2 Construction Contractor's Project Manager C-12
3.3.3 Construction Contractor's Superintendent(s) C-13
3.3.4 Construction Contractor's Civil Survey Supervisor C-14
3.3.5 Construction Contractor's Lead Environmental Inspector C-14
3.3.6 Construction Contractor's Environmental Inspector C-15
3.3.7 Construction Contractor's Environmental Reporting Coordinator C-16
3.3.8 Construction Contractor's Environmental Training Coordinator C-17
3.3.9 Construction Contractor's Environmental Crew Foreman C-18
4.0 PROCEDURES C-18
4.1 Compliance Levels C-18
4.1.1 Acceptable C-18
4.1.2 Problem Area C-18
4.1.3 Noncompliance C-19
4.1.4 Response to Noncompliant Activities C-20
4.2 Variance Procedures (Unforeseen Circumstances) C-21
4.2.1 Level 1 Variance – Variances Accomplished through Field Resolution C-23
4.2.2 Level 2 Variance – Variances Beyond Field Resolution, Not Requiring an Amendment to the Right-of-way Grant or Special-use Authorization C-25
4.2.3 Level 3 Variance – Variances Requiring an Amendment to the Right-of-way Grant or Special-use Authorization C-27
5.0 COMMUNICATIONS C-28
5.1 Primary Inter-Party Communication Channels C-28
5.2 Daily Communications C-28
6.0 TRAINING C-29
6.1 Preconstruction C-29
6.2 During Construction C-29
7.0 REPORTING AND DOCUMENTATION C-30
8.0 PROJECT CLOSEOUT C-31

8.1 Reclamation and Post Construction C-31
8.2 End of Construction Project Report C-31
8.3 Construction Closeout Meeting C-31

LIST OF TABLES

Table 4-1. Summary Of Variance Procedures on Private Lands C-23
Table 4-2. Summary Of Variance Procedures on Non-Private Lands C-23

LIST OF FIGURES

Figure 3-1. ECMP Organization Chart C-4
Figure 4-1. Draft Variance Request Process C-22

LIST OF ATTACHMENTS

Attachment A Daily Inspection Report Form
Attachment B Variance Request Form
Attachment C Noncompliance Form

1.0 INTRODUCTION

Rocky Mountain Power and Idaho Power Company (Companies) are proposing to construct and operate approximately 1,000 miles of new 230-kilovolt (kV), 345-kV and 500-kV alternating current electric transmission system, called the Gateway West Transmission Line Project (Project), consisting of 10 segments between the Windstar Substation at Glenrock, Wyoming, and the Hemingway Substation approximately 30 miles southwest of Boise, Idaho. The proposed transmission line is needed to supplement existing transmission lines in order to relieve operating limitations, increase capacity, and improve reliability in the existing electric transmission grid, allowing for the delivery of up to 1,500 megawatts of additional energy for the Companies' larger service areas and to other interconnected systems. The Project includes ground-disturbing activities associated with the construction of above-ground, single- circuit transmission lines involving towers, access roads, multiuse areas, fly yards, and pulling sites as well as associated substations, communication sites, and electrical supply distribution lines. The Project crosses private land and public lands administered by the Bureau of Land Management (BLM), U.S. Forest Service (USFS), and the states of Idaho and Wyoming.

The BLM and USFS will be responsible for enforcement of the terms and conditions of the BLM's right-of-way grant and USFS's special use authorization on federal lands during the term of the grant/special-use authorization, respectively. As the lead federal agency, the BLM will engage a third-party Compliance Inspection Contractor (CIC) to act on behalf of the BLM and USFS to provide construction oversight and monitor compliance with the terms and conditions of the BLM's right-of-way grant and the USFS's special-use authorization.

On federal lands, the CIC will inspect and monitor preconstruction and construction activities, as well as enforce the terms and conditions of the BLM's right-of-way grant and the USFS's special-use authorization. On non-federal lands, the CIC will inspect and monitor preconstruction and construction activities, document disturbance of the entire Project on all lands analyzed in the Environmental Impact Statement (EIS) and enforce requirements related to BLM and Forest Service responsibilities under the National Historic Preservation Act (NHPA) and the Endangered Species Act (ESA).

In addition, the Project will require adherence to any federal, state, and local permits, as well as private landowner agreements (if applicable), that include conditions to construct. The responsibility of compliance monitoring and enforcement of non-federal conditions will be determined between the Companies and the landowner on a case-by-case basis.

Because of the Project's potential to impact sensitive environmental resources, environmental protection measures (EPMs) have been developed to minimize potential impacts on these resources (see Section 4 of the Plan of Development [POD]).

2.0 ENVIRONMENTAL COMPLIANCE MANAGEMENT PLAN ELEMENTS AND AUTHORITY

This Environmental Compliance and Monitoring Plan (ECMP) is the primary guidance document that states how the Project participants will uphold, document, and manage compliance with the right-of-way grant/special-use permit; the POD; landowner agreements, and all federal, state, and local permits. It is a centralized Project environmental compliance reference and is thereby intended to facilitate environmental compliance across the entire Project for all parties and describes the following essential elements:

- Roles and responsibilities of the participants
- Comprehensive inspection and monitoring program
- Corrective procedures in the event of noncompliance
- Standard protocol for variance requests, exceptions, and other deviations
- Communication plan
- Reporting process
- Comprehensive Project-specific environmental compliance training program

The Companies' commitment to environmental compliance will be demonstrated by activities prior to, during, and following construction. The ECMP is intended to be a controlled document and may be revised as needed throughout the construction process. Because the Project will cross federal and state lands as well as lands owned privately and/or under the jurisdiction of multiple agencies, the ECMP will be applicable for multiple jurisdictional permitting entities and landowners.

Authority for implementation of this ECMP originates from the terms, conditions, and stipulations of the BLM's right-of-way grant and the USFS's special-use permit, the POD, the Final EIS, the Record of Decision (ROD), the Notice to Proceed (NTP), and other conditions associated with nonfederal agency permits. As part of the Companies' environmental compliance commitment, the Construction Contractor(s) will be contractually bound to comply with all laws, regulations, and permit requirements, including the mitigation measures and other specific stipulations and methods set forth in the POD (within the bounds of construction activities and associated disturbance analyzed in the Final EIS).

Project specific permitting documents, including but not limited to those identified above, must be reviewed prior to any construction activities to identify all Project-wide and site specific requirements. These documents will be distributed by the CIC to the appropriate parties for their review prior to the initial construction kickoff meeting. At that time, a document control system to manage distribution of all documents and revisions will be presented and demonstrated.

The Companies and BLM have agreed to use a third-party CIC to act on the BLM and USFS's behalf to ensure adequate oversight during construction. The CIC will be hired by the Companies prior to the BLM and USFS offering the right-of-way grant and special use authorization, respectively, to allow adequate time for the CIC to review

documents and develop on-the-ground familiarity with the Project. The CIC will be authorized to enforce the POD on BLM- and USFS-administered lands. The CIC will also ensure BLM and USFS responsibilities under the NHPA and ESA are met on non-federal lands and disturbance on non-federal lands is consistent with the analysis in the EIS.

Environmental Inspectors will be retained by the Construction Contractor(s) but will report to the Proponent who will then report to the BLM (as shown in the organizational chart in Figure 3-1 in Section 3.0 – Roles and Responsibilities). The Environmental Inspectors' primary focus will be to make certain that all construction activities in all Project segments and phases are performed in accordance with the environmental commitments set forth in the POD, permits, and individual agreements. The Environmental Inspectors will be of particular importance on non-federal lands, where the CIC will have authority limited to NEPA and ESA responsibilities and in some cases, may not be allowed to access the Project right-of-way. In such cases, in addition to monitoring for environmental compliance with the POD, permits, and individual agreements, the Environmental Inspectors must document all construction activities and Project disturbance that occurs at each work area, which will be included in the total Project disturbance tracking maintained by the CIC (Section.2.3).

The BLM, through the CIC and the Companies will provide direct oversight of the Construction Contractor's environmental compliance performance, with any specific work direction to the Construction Contractor(s) only coming from the Companies. Additional information about the Construction Contractor's role in this ECMP is explained in Section 3 below.

3.0 ROLES AND RESPONSIBILITIES

The following section describes the responsibilities of each ECMP entity and describes their reporting relationships and roles in executing the ECMP (Figure 3-1). If other parties become engaged in this ECMP as additional participants, they would be responsible to function and abide by the protocols, terms, and conditions outlined in this ECMP and their reporting relationships would be case-specific according to their jurisdiction, expertise, and/or nature of their input.

Section 3, Roles and Responsibilities, briefly discusses the variance process. However, a more detailed variance discussion is located in Section 4.2, Variances.

3.1 Companies

The Companies will act as holder of all rights-of-way easements, public and private, and will be the grant holder for the BLM right-of-way and USFS special-use authorization. As such, the Companies is ultimately accountable for adherence to the environmental permit requirements specified in the terms of its agreements and is responsible for ensuring that environmental impacts do not exceed those analyzed in the Final EIS and approved in the POD. To facilitate this goal, the Companies will maintain regular and consistent communication with the Construction Contractor(s) to track the success of mitigation and compliance efforts prior to, during, and following construction. As the permit holder, the Companies are responsible for assuring that all instances of noncompliance are corrected.

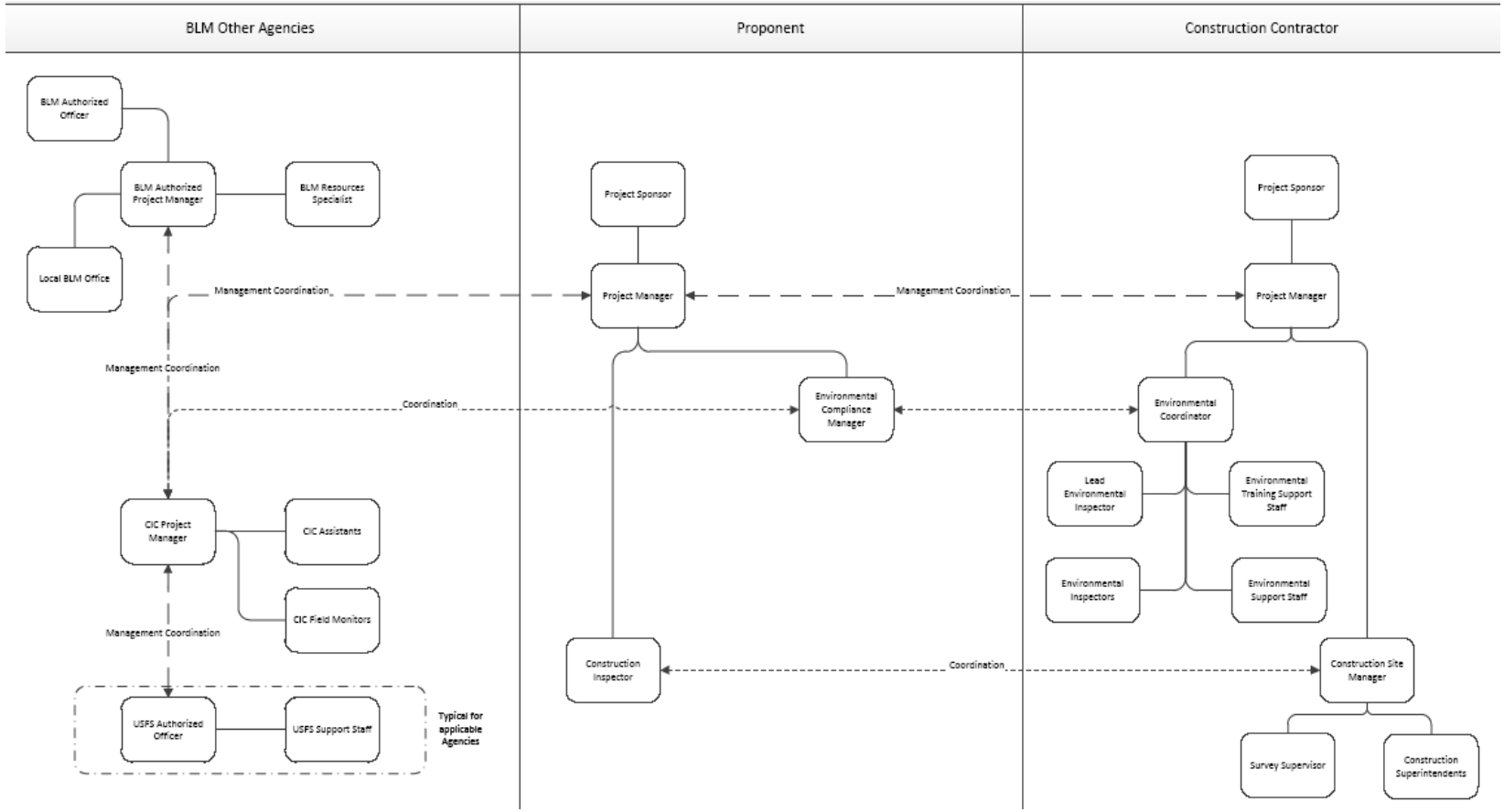

Figure 3-1. ECMP Organization Chart

3.1.1 Companies' Project Sponsor

- Responsible for Project delivery. Ensures effective coordination occurs between the Companies Project Manager and Environmental Compliance Manager with the BLM's Project Manager and CIC and the Construction Contractor's Project Manager to verify environmental compliance meets the requirements of all applicable laws, permits, and agreements.
- Informs the Construction Contractor(s) they are contractually bound to comply with all of the Project's environmental requirements including the implementation of the ECMP.

3.1.2 Companies' Project Manager

- Responsible for all aspects of Project execution and completion.
- Enforces Construction Contractor(s) compliance with all environmental laws and regulations, including the right-of-way grant, POD, permits (federal, state, and local) and landowner agreements, during the construction of the Project.
- Manages Companies' Construction Inspector and Environmental Compliance Manager.

Reporting

- Reviews and evaluates weekly reports.
- Reports environmental compliance violations to Companies' Project Sponsor as needed.

Variances

- Reviews and approves Construction Contractor's written variance requests for submittal to the CIC.
- Delegates authority to approve submittal of Construction Contractor's variance requests to the BLM as needed.

3.1.3 Environmental Compliance Manager

- Facilitates oversight and coordination of Construction Contractor's compliance with all environmental laws and regulations, including the right-of-way grant/special use authorization, POD, permits (federal, state, and local) and landowner agreements, during the construction of the Project.
- Coordinates with Companies' Project Manager and Construction Inspector (see Section 3.1.4 – Companies' Construction Inspector), the Construction Contractor's environmental inspection/compliance personnel (see Section 3.3.7- Construction Contractor's Environmental Reporting Coordinator, and the CIC (see Section 3.3.2- Compliance Inspection Contractor) on a regular basis to evaluate environmental compliance with the Project.
- Monitors completion of all preconstruction and post-construction commitments.
- Serves as the primary Companies' contact regarding environmental issues.
- Communicates environmental compliance issues to the CIC and tracks resolution of issues to completion.

- Coordinates field inspection visits with Construction Contractor(s).
- Maintains coordination with the Companies' environmental department throughout the life of the Project.
- Coordinates submittal of all Work Authorizations associated with the BLM NTP

Reporting

- Provides updates of environmental compliance, including corrective actions, to the Project Manager.
- Compiles and distributes environmental permit and plan updates to Companies' staff and the Construction Contractor's Environmental Coordinator.
- Reviews all Construction Contractor(s) derived environmental documentation including, but not limited to, site specific environmental plans, environmental plans, variance requests, daily reports, and weekly reports.

Variances

- Provides review and comments of written variance requests from the Construction Contractor(s).
- Submits completed variances to the Companies' Project Manager for review, approval, and submission to the CIC.

3.1.4 Companies' Construction Inspector

- Observes, witnesses, and monitors the construction activities of the Construction Contractor(s) for compliance to the engineering contract documents, plans, standards, and specifications, to ensure construction quality.
- Understands the Project's environmental requirements especially as they relate to specific construction activities.
- Coordinates with Companies' Environmental Compliance Manager regarding specific work activities scheduled to occur in sensitive resource areas that may require additional environmental oversight.
- Provides technical explanations of construction processes to Companies' Environmental Compliance Manager as needed.
- Attends environmental training class.

Reporting

- Reviews for accuracy and adequacy certain environmental compliance documents prepared by the Construction Contractor(s) that could include, but are not limited to, Spill Prevention, Control and Countermeasures Plan, Stormwater Pollution Prevention Plan(s), and emergency communications contact list.
- Provides any observations regarding environmental compliance to Construction Contractor's Environmental Reporting Coordinator.

3.2 BLM and USFS

The objective of the BLM and USFS is to ensure right-of-way grant and special-use permit compliance, respectively, during construction, operation, and maintenance

phases. The CIC shall represent the BLM and USFS during the construction and reclamation phases to help ensure right-of-way grant and special use authorization compliance and ensure environmental impacts do not exceed those analyzed in the Final EIS, and approved in the POD. The CIC assists the BLM and USFS by providing regular and consistent field observations, documenting his/her findings, processing and approving Level 1 Variance requests and/or other deviations for which authority has been delegated to the CIC, and working with the Companies and Construction Contractor(s) to identify compliance issues and maintain compliance during construction of the Project.

The CIC shall work under the direct supervision and control of the BLM. No direction with respect to times, places or manner of conducting monitoring shall be taken from the Companies or Construction Contractor(s); provided, however, that the CIC and the Companies work together to support the Project's timely and effective construction. If the CIC determines an action is in noncompliance, the CIC has the authority to issue an immediate temporary suspension or work stoppage order (WSO) for that specific work activity. However, all efforts shall be made to coordinate closely with the Companies and Construction Contractor(s) to report and document compliance concerns not otherwise identified by these parties, giving them the opportunity to resolve the concerns. Every effort shall be made to limit any work stoppage to situations involving immediate threats to sensitive resources, or emergency situations. The CIC is not, at any time or way, otherwise authorized to direct work undertaken by the Construction Contractor(s), with the exception of a WSO. If any additional environmental compliance oversight representative is required by agencies other than the BLM and USFS, their responsibilities would be consistent with those outlined for the BLM and USFS and the CIC as described in this ECMP, although their authority and enforcement would be solely applicable in their respective agency's area of jurisdiction.

It is not the role of the CIC to direct the work of either the Companies or the Construction Contractor(s). Rather, the CIC's primary role is to observe work activities, and bring noncompliant situations to the attention of the appropriate party and offer recommendations on how to prevent noncompliance.

3.2.1 BLM and USFS Authorized Officers

- Ultimate authority and decision maker for issues pertaining to BLM's right-of-way grant or USFS' special-use authorization.
- Supervises BLM Project Manager to verify environmental compliance meets the requirements of all applicable laws, permits, and agreements.
- Determines, in coordination with others, if any environmental noncompliance events, for which the Companies is accountable, qualify as violations to the terms and conditions of the right-of-way grant or special use authorization.
- In accordance with 43 Code of Federal Regulations (CFR) 2807 and CFR 36 CFR 251.60, suspends or terminates the right-of-way grant or special use authorization if the Companies and/or its Construction Contractor(s) do not comply with applicable laws and regulations or any terms, conditions, or stipulations (e.g., excessive or continuous noncompliance activities that

demonstrate a willful disregard for right-of-way grant or special use authorization terms and conditions).

- Issues BLM/USFS decisions unless otherwise delegated to the BLM Project Manager.

3.2.2 BLM and USFS Project Manager

- Enforces Companies' compliance with all environmental laws and regulations, including the right-of-way grant/special use authorization,, POD, and federal permits during construction of the Project.
- Responsible for ensuring that right-of-way grant/special use authorization compliance during construction is done in a manner which facilitates timely and efficient construction while protecting the public interests and the environment.
- Responsible for ensuring that environmental impacts do not exceed those analyzed in the Final EIS and ROD.
- Manages third-party CIC
- Coordinates with BLM or USFS resource specialists for their technical expertise and input.
- Informs the Companies of any right-of-way or special use authorization violations due to environmental noncompliance and enforces their remedy.
- Reports major environmental compliance violations to BLM/USFS Authorized Officer.

Reporting

- Responsible to ensure that the Project Administrative Record is maintained accurately.

Variances

- If delegated by the Authorized Officer authorizes approval of Level 2 Variances or designates authority to others.

3.2.3 Compliance Inspection Contractor

- Represents the BLM/USFS in the field for compliance activities.
- Verifies and reports Construction Contractor's compliance with all environmental requirements and tracks all reported noncompliance events and their resolution.
- Tracks all Project construction disturbance for inclusion in an End of Construction Project Report (Section 8.2)
- Reports directly to the BLM Project Manager (or designees).
- Remains assigned to the Project through completion of reclamation and initial revegetation or termination of the Project unless otherwise directed by BLM.
- Reviews and understands the right-of-way grant/special-use authorization, Final EIS, Record of Decision, POD, and all other Project-specific environmental documents.

- Maintains copies of the right-of-way grant/special-use authorization and POD and possesses a copy while on the right-of-way.
- Verifies construction occurs as outlined in the POD, Final EIS, Record of Decision, and right-of-way grant/special-use authorization and within the limits of disturbances analyzed in the EIS.
- Performs compliance monitoring work in the field and from the CIC's office. At a minimum, CIC or designated monitors are required to be on the right-of-way when activities involving the use of construction equipment have the potential for significant surface disturbance or harm to sensitive resources. Exceptions can be made should the CIC, using professional judgment, determine that reductions in presence would not adversely impact compliance oversight (e.g., when Project phases have approached conclusion; when on-site activities are minimal).
- Responsible to gather the collective understanding of the intent and desired results of application of site specific mitigation measures and convey findings to all parties, if needed. If discrepancies are found between parties, CIC is responsible to collaborate with the Companies and Construction Contractor to work towards a resolution. In some cases, approval from the BLM Project manager may also be required.
- Coordinates regular compliance monitoring during construction.
- Discusses any potential compliance issues with the Construction Contractor's environmental inspection staff as soon as possible.
- Provides recommendations to the BLM/USFS Project Managers on ways to resolve or prevent noncompliance issues prior to the commencement of work.
- Manages and supports CIC Field Monitors and coordinates their daily activities.
- At a minimum, meets weekly with the BLM/USFS Project Managers (or designees), in person or by telephone, to review construction activities and the status of compliance.
- Communicates and coordinates regularly with Companies' Project Manager and Environmental Compliance Manager.
- Coordinates variance requests with the BLM/USFS Project Managers and Companies' Project Manager and Environmental Compliance Manager.
- Participates in meetings with the BLM/USFS Project Managers and Companies' Project Manager.
- Conducts the final route review and develops final report documenting the status of the right-of-way and the final amount of construction disturbance.
- Performs activities as instructed by BLM/USFS Project Managers.
- Responsible for tracking actual acres of disturbance through completion of construction and final reclamation.

- Performs post-construction reclamation monitoring as described in the Final Reclamation Plan in the POD (potentially conducted by a separate third-party contractor as determined by the BLM/USFS and the Proponent).

Reporting

- Documents all instances of noncompliance, or other problems that would reasonably be expected to result in environmental impacts. This may include, staking, flagging, or photographing problem areas, verifying locations with a global positioning system, and comparing them to the right-of-way grant/special-use authorization and POD maps as specified in the Compliance Plan.
- Provides weekly summary reports of compliance inspection to the BLM/USFS and the Companies via a secure, but mutually exclusive, website, with reporting due by Tuesday of the following week. In the event the CIC, BLM, or USFS temporarily cannot obtain reports through the secure website, reports will be transmitted by mail, e-mail, fax, or compact disk. Weekly reports shall summarize the prior week's activities and include a brief description of construction activities, compliance issues, any additional acreage disturbed resulting from variances and corrective actions taken and any foreseeable issues.
- Reviews CIC Field Monitor's daily reports for completeness and accuracy.
- Participates in all preconstruction meetings, safety meetings, safety training, environmental training, and other meetings called by the BLM or USFS, Companies, or Construction Contractor(s) which involve environmental compliance aspects of the Project. The CIC is responsible for preparing meeting notes that highlight all decisions made during these meetings.
- Provides post-construction reclamation monitoring reports to the BLM/USFS and Companies throughout the post-construction period (potentially conducted by a separate third-party contractor as determined by the BLM/USFS and the Proponent).

Variances

- Coordinates with BLM and USFS Project Managers to review and approve variance requests.
- Authorizes approval or denial of Level 1 variances involving minor field adjustments within approved right-of-way that conforms to the POD, or designates authority to others, as delegated and approved by BLM and USFS Project Managers.

3.2.4 Assistant Compliance Inspection Contractor

- Performs the same duties as the CIC in the event that the CIC is not available.
- Remains assigned to the Project through completion of construction or termination of the Project unless redirected by BLM or USFS.

3.2.4.1 Compliance Inspection Contractor Field Monitors

- Assists CIC in conducting monitoring of construction activities as needed for biological, cultural, paleontological, or other resources and according to scheduled construction activities within environmentally sensitive areas.
- Represents the BLM/USFS in the field for compliance activities.
- Verifies construction occurs as outlined in the POD, Final EIS, ROD, and/or right-of-way grant/special-use authorization.
- Verifies construction crews are provided with proper environmental and compliance training.
- Discusses any potential compliance issues with the Construction Contractor's environmental inspection staff (see Sections 3.3.5 - Construction Contractor's Lead Environmental Inspector and _3.3.6 - Construction Contractor's Environmental Inspector) as soon as possible.
- Coordinates with the Construction Contractor's Lead Environmental Inspector (LEI) and the Companies' Environmental Compliance Manager as their primary points of contact.
- Coordinates solutions for corrective action on noncompliance activities.
- Verifies corrective action is performed for noncompliance activities.
- May temporarily stop activities likely to damage protected or sensitive resources and/or where those resources were intended to be avoided or protected.
- May temporarily stop activities for noncompliance.
- Conducts daily compliance inspection activities and develops daily reports.
- Attends safety and environmental coordination meetings to understand planned construction activities and any safety or environmental concerns.
- Does not direct construction activities in any way.

Reporting

- Submit daily reports to the CIC to document compliance or noncompliance with the Project's environmental requirements.

3.3 Construction Contractor(s)

The Construction Contractor(s) will be contractually bound to comply with all laws, regulations, and permit requirements, including the mitigation measures and other specific stipulations and methods set forth in the right-of-way grant/special-use authorization, POD, Final EIS, and ROD throughout all phases of the Project. All construction personnel will participate in environmental trainings and work with the Construction Contractor's Environmental Inspectors and staff to build the Project safely and in compliance with all Project terms and conditions; federal, state, and local laws and regulations; and all landowner agreements. If a noncompliance occurs, the Construction Contractor(s) will cooperate and implement a solution as soon as possible to resolve the situation.

3.3.1 Construction Contractor's Project Sponsor

- Responsible for Project completion in accordance with all environmental laws and regulations, including the terms, conditions, stipulations, and/or work authorizations related to the right-of-way grant, special use authorization, POD, permits (federal, state, and local), and landowner agreements.
- Ensures its Project Manager promptly addresses any environmental compliance issues.
- Ensures effective coordination between his/her Project Manager and/or LEI with the Companies' Project Manager, and Environmental Compliance Manager, and the BLM and USFS Project Manager and/or CIC to verify environmental compliance meets the requirements of all applicable laws, permits, and agreements.
- Ensures the immediate and timely remedy to any environmental noncompliance events to the satisfaction of the Companies' Environmental Compliance Manager and the CIC.

3.3.2 Construction Contractor's Project Manager

- Responsible for all aspects of Project execution and completion.
- Requires all Construction Contractor's and subcontractor(s) staff adhere to compliance with all environmental laws and regulations, including the right-of-way grant/special use authorization, POD, permits (federal, state, and local), and landowner agreements during the construction of the Project.
- Coordinates with his/her Superintendent(s), and optional LEI, as well as Companies' Project Manager and Environmental Compliance Manager on a regular basis to stay updated regarding the Project's compliance with environmental laws and regulations.
- Requires all Superintendents and Foremen follow directions of the Construction Contractor's environmental compliance staff regarding maintaining compliance with all environmental laws and regulations.
- Ensures Superintendents and Foremen implement measures identified to resolve noncompliance issues in a timely manner.
- Designates the Construction Contractor's Environmental Coordinator (if desired).
- Verifies construction personnel participate in the environmental training program.
- Responsible for removal of noncompliant personnel, as necessary.
- Manages Construction Contractor's Superintendent(s), Foremen, Environmental Crew Foreman, and LEI.
- Develops and distributes weekly schedules of construction activities.
- Immediately informs Companies' Environmental Compliance Manager and CIC of any noncompliance.
- Responsible for resolving noncompliance situations.
- Responsible for environmental compliance of all subcontractors.

- Determines the need for scope variances and works with staff and Construction Contractor's Environmental Inspectors to develop a formal request.
- Receives and review daily environmental compliance inspection reports from Construction Contractor's environmental staff.

Reporting

- Responsible for making sure Companies is provided with reports in a timely fashion.
- Reviews and approves compliance reports for submittal to Companies.

Variances

- Reviews and approves written variance requests for submittal to Companies, CIC, and BLM or USFS.
- Can delegate authority to submit written variance request to others.

3.3.3 Construction Contractor's Superintendent(s)

- Primarily situated in the field to manage construction activities.
- Responsible for a segment or portion of the overall Project.
- Requires all contractor personnel follow directions of the Construction Contractor's environmental compliance staff regarding maintaining compliance with all environmental laws and regulations, including the right-of-way grant/special use authorization, POD, permits (federal, state, and local), and landowner agreements during the construction of the Project.
- Coordinates with the LEI, and the Construction Contractor's Environmental Training Coordinator and Environmental Inspectors to ensure all construction personnel for which they are responsible abide by all applicable laws, permits, and agreements.
- Attends environmental training programs produced by the Construction Contractor(s).
- Conducts regular meetings and training with construction personnel to review safety and environmental compliance practices.
- Ensures measures identified to resolve noncompliance issues are communicated to construction personnel and implemented in a timely manner.
- Immediately informs Construction Contractor's Project Manager of any noncompliance.
- Evaluates all compliance issues and ensures all supervisee's involved with any construction activities complete the environmental training program.

Reporting

- Prepares report regarding measures taken to resolve any noncompliance events and submits them to the Construction Contractor's Environmental Reporting Coordinator.

Variances

- Prepares written variance requests for submittal to Companies, CIC, and BLM or USFS.
- Can delegate authority to prepare written variance request to others.

3.3.4 Construction Contractor's Civil Survey Supervisor

- Sets initial and maintains right-of-way and easement boundary stakes and flagging with agreed on Project flagging scheme.
- Delegates survey crews when necessary to work with environmental inspectors to adjust work areas to comply with environmental constraints.
- Communicates with Companies' Construction Inspector and Environmental Compliance Manager regarding changes to right-of-way boundaries.
- Maintains a master set of alignment sheets for each spread in the appropriate spread office. The alignment sheets should reflect all restricted areas due to easement status, environmental restrictions, etc.
- Places signs for roads approved for use on the Project and those not approved for use on the Project.

Reports and Variances

- Provides data and/or supports development of maps and legal descriptions for Project reports, variance requests, and documentation in the Project Record.

3.3.5 Construction Contractor's Lead Environmental Inspector

- Regularly inspects or coordinates the inspection of all construction activities for compliance with all environmental laws and regulations, including the right-of-way grant/special use authorization, POD, permits (federal, state, and local) and landowner agreements, during the construction life of the Project.
- Has the authority to stop work when construction activities violate environmental conditions of right-of-way grant/special use authorization, permits or landowner conditions.
- Identifies sensitive resources and areas of concern prior to upcoming construction activities and coordinates appropriate measures with construction personnel accordingly.
- Acts as a resource and technical lead to Environmental Inspectors.
- Acts as a resource to construction personnel and explains environmental laws and regulations and how they are applied in the field.
- Serve as the primary point of contact for the third-party CIC Field Monitors.
- Coordinates appropriate corrective actions to resolve noncompliance issues.
- Coordinates daily with Environmental Inspectors to discuss upcoming construction activities, potential problem areas, and areas of concern.
- Assigns field inspection responsibilities to Environmental Inspectors.

- Coordinates with Environmental Inspectors and construction personnel to provide information and facilitate regular communication among all parties.
- Inspects areas of concern identified by Environmental Inspectors and makes appropriate recommendations to construction personnel.
- Inspects erosion control devices/measures to ensure functionality and communicates erosion control devices/measures maintenance needs to the Construction Contractor's Environmental Crew Foreman.
- Communicates with and Environmental Crew Foreman on issues needing resolution in the field.
- Performs post-construction reclamation monitoring as described in the Final Reclamation Plan in the POD, and as directed by the BLM/USFS and/or Proponent.

Reporting

- Reviews daily reports from field inspectors for completeness and accuracy and communicates action items or follow-up items to appropriate parties
- Forwards all daily and weekly reports to Construction Contractor's Environmental Reporting Coordinator for storage and potential agency distribution.
- Compiles daily reports into weekly summary report.
- Submits weekly summary documenting construction activities and compliance issues to the Construction Contractor's Environmental Reporting Coordinator.
- Provides post-construction reclamation monitoring reports to the Companies throughout the post-construction reclamation monitoring period, as described in the Final Reclamation Plan in the POD.

Variances

- Conducts primary reviews of written variance requests from the Construction Contractor(s).
- Communicates variance status to Environmental Inspectors and construction personnel.

3.3.6 Construction Contractor's Environmental Inspector

- Assists in inspection of construction activities for compliance with all environmental laws and regulations, including the right-of-way grant/special use authorization, POD, permits (federal, state, and local) and landowner agreements, during the construction of the Project.
- Conducts daily inspections of construction activities.
- Identifies sensitive resources and areas of concern prior to upcoming construction activities and coordinates with construction personnel to discuss.
- Acts as a resource to construction personnel to explain environmental regulations and how they are applied in the field.

- Verifies construction work areas, access roads, and features such as wetlands or sensitive habitat are properly marked and flagged before work is done in the area.
- Identifies erosion, sediment control, and soil stabilization needs to protect sensitive resources and communicates them to construction personnel.
- Ensures erosion control or other measures do not inadvertently cause impact to other sensitive resources.
- Acts as a point of contact for the third-party CIC Field Monitors.
- Informs Construction Contractor(s) of all potential and existing compliance issues and coordinates with LEI to determine appropriate corrective actions.
- Has stop-work authority when construction activities violate the environmental conditions of the right-of-way grant/special use authorization, permits, or landowner conditions.
- Identifies, documents, and oversees corrective actions to resolve noncompliance issues.
- Inspects erosion control devices/measures to ensure functionality and communicates erosion control devices/measures maintenance needs to the Environmental Crew Foreman.
- Follows up on the repair and maintenance of erosion control devices/measures.
- Inspect and document reclamation and revegetation activities.

Reporting

- Maintain and submit daily reports to the LEI that document construction activities and associated compliance status for that day.
- Document the resolution of any compliance issues in daily reports.

3.3.7 Construction Contractor's Environmental Reporting Coordinator

- Assists in tracking Project compliance with all environmental laws and regulations, including the right-of-way grant/special use authorization, POD, permits (federal, state, and local) and landowner agreements, during the construction of the Project.
- Coordinates with Companies' staff, the Construction Contractor(s), BLM, and other relevant agency contacts and field inspection personnel on a regular basis to manage and track Project activities and ensure consistent communications Project wide.
- Maintains consistent communication between the Companies and all federal, state, and local agencies.

Reporting

- Receives daily/weekly reports from Construction Contractor's environmental inspectors and documents them accordingly.

- Maintains centralized storage of daily/weekly Environmental Inspection reports and makes reports available at the request of the BLM Project Manager.
- Reviews field reports for consistency and accuracy.
- Responsible for tracking problem areas and noncompliance reports (including hazardous materials spill reports) and ensuring follow up and resolution reports are filed.

Variances

- Tracks variances and communicates variance status with Construction Contractor's Project Manager, Superintendent(s), and LEI.
- Coordinates processing and archiving of variances.
- Tracks progress and completion of any required field surveys (biology, archaeology, etc.) and technical reports to support variances.
- Ensures variance requests are complete and accurate prior to submitting to the BLM.

3.3.8 Construction Contractor's Environmental Training Coordinator

- Develops training program to facilitate compliance with all environmental laws and regulations, including the right-of-way grant/special use authorization, POD, permits (federal, state, and local) and landowner agreements, during the construction of the Project.
- Provides CIC and Companies' Environmental Compliance Manager with a course outline and all training material at least 30 days prior to any training for approval.
- Provides consistent roll-out of all training to all required personnel.
- Supports Environmental Inspectors and other environmental staff in providing routine trainings in the field.
- Maintains records of training for all construction personnel and submits to Companies on a weekly basis.
- Updates training curriculum as needed.
- Facilitates compliance with all environmental laws and regulations, including the right-of-way grant, POD, permits (federal, state, and local) and landowner agreements, during the construction of the Project.
- Conducts training session for Companies construction and contractor staff at least 30 days prior to construction.
- Conducts preconstruction, refresher, and remedial training for Project personnel.
- Provides environmental compliance training to new personnel as they join the Project.
- Provides field reference guides to Project personnel with photos and details of sensitive resources and methods for impact avoidance.

- Updates Project training modules using feedback from environmental inspection team, construction personnel, and Environmental Compliance Manager.
- Maintains records of training for all personnel.

3.3.9 Construction Contractor's Environmental Crew Foreman

- Supervise environmental crew in daily installation and maintenance of erosion control devices/measures and all other design features of the project for environmental protection.
- Follows up on the repair and maintenance of erosion control devices/measures.
- Ensure all areas of the right-of-way are in compliance with all environmental requirements/ permits held by the Construction Contractor(s).
- Work with the Construction Contractor's environmental inspection staff to remedy any problem areas and assure all areas are in compliance.

4.0 PROCEDURES

4.1 Compliance Levels

Each separate activity that is inspected and documented in a daily report will be assigned a compliance level as defined below. Environmental Inspectors will assess potential noncompliant activities based on the extent and nature of actual impacts on a resource, the potential for additional impacts on a resource, the intent behind the action, and the history of the occurrence.

4.1.1 Acceptable

All activities that are in compliance with the Project's environmental requirements will be documented as acceptable.

4.1.2 Problem Area

A problem area is a location or activity that does not meet the definition of acceptable but is not noncompliant (see Section 4.1.3 – Noncompliance). The problem area category can be used in a variety of situations, including the following:

- A minor incident that is accidental or unforeseeable and is repaired in a timely manner.
- A location where the Project is not in direct noncompliance but is one where the inspector or monitor determines damage to a resource could occur if corrective actions are not taken.
- An activity that is isolated and determined unintentional that causes no direct damage to a resource.

If a problem area is corrected in a timely manner it will not be considered a noncompliance. If a problem area is found to be a repeat situation or has happened in multiple locations or is not corrected within an agreed on timeframe, the Construction Contractor's Environmental Inspector or CIC Field Monitor may document the situation as a noncompliance. The Construction Contractor's Environmental Inspector will inform the Construction Contractor's Foreman onsite of the problem area before issuing a

problem area report and discuss and agree on an acceptable timeframe for its resolution. The Construction Contractor's Environmental Inspectors will document problem areas and their resolutions in daily reports. Problem areas documented by the CIC Field Monitors will be reported and discussed with the Environmental Inspectors. If the problem area is not corrected in the agreed on timeframe, resource damage occurs or similar activities occur repeatedly, a noncompliance report may be issued.

4.1.3 Noncompliance

A noncompliance report will be prepared and issued by the CIC when construction activities violate the Project's environmental requirements, result in damage to a resource, or place sensitive resources at unnecessary risk. Factors that will contribute to a noncompliance will be the extent of damage to the resource, the intent of the action and the determination of the action being a repeat occurrence. A noncompliance report may also be issued for direct disregard for Project requirements that do not directly cause harm to sensitive resources. Examples include using an unapproved access road or construction activities that cause ground disturbance outside of established Project boundaries.

If the CIC or CIC Field Monitor observes a noncompliant activity they will notify the Companies' Environmental Compliance Manager and the Construction Contractor's LEI and Superintendent immediately to discuss the situation prior to issuing a noncompliance report. If a noncompliance report is issued, it will include the name of the Construction Contractor's Superintendent contacted and the time of the notification. In addition, a follow up report will be filed documenting the resolution of the noncompliance. If the Construction Contractor's Superintendent is not immediately available or the severity of the situation requires immediate action, the monitor will inform the Construction Contractor's Project Manager and the Companies of the noncompliance.

If the Construction Contractor's Environmental Inspection staff observes a noncompliance, they will notify the superintendent or Foreman onsite immediately. The noncompliance will be resolved immediately or within an agreed on timeframe that has been established by the Environmental Inspector and the Superintendent or Foreman. The Construction Contractor's Environmental Inspector will also notify the CIC Field Monitor and document the noncompliance in a daily report that will be filed with the Construction Contractor's Environmental Reporting Coordinator and Companies' Environmental Compliance Manager. The CIC will submit all noncompliance reports and reports documenting their resolution to the BLM or USFS Project Managers, Companies and Construction Contractor(s). The Construction Contractor's Environmental Inspectors and the Companies' Environmental Compliance Manager and the CIC will work together to establish the appropriate corrective actions and timeframes for the resolution of a noncompliance. The Construction Contractor(s) Environmental Inspector will be responsible for communicating the corrective actions to the Foreman onsite. If necessary, the Companies' Environmental Compliance Manager and the Construction Contractor's LEI and Superintendent will determine the level of retraining for the crew involved. Following a serious or repeat noncompliance the CIC, the Construction Contractor's Project Manager, LEI, Environmental Inspector, and Superintendent(s),

and the Companies' Project Manager and Environmental Compliance Manager will discuss the situation and how best to implement measures to prevent it from reoccurring.

4.1.4 Response to Noncompliant Activities

If the resolution of a noncompliance is not achieved through the process described above the following may occur:

Temporary Suspension

For incidents of noncompliance by the Companies or the Construction Contractor(s), that remain unresolved after the notifications described under Section 4.1.3 - "Noncompliance", the CIC or Project Manager may issue a temporary suspension to halt specific activities or all activities in a localized work area. The temporary suspension shall be issued orally and in writing to the Companies' Project Manager or designee, and the Companies shall immediately provide notice of the temporary suspension to the Construction Contractor's Project Manager or designee.

Work Stoppage Order

If necessary, a WSO to temporarily suspend all construction activities may be issued orally or in writing by the CIC or Project Manager to the Companies' Project Manager. A WSO would be appropriate in the event of serious noncompliance that could reasonably be expected to result in a risk of death or harm to persons or repeated violations of environmental requirements that have a detrimental effect to sensitive resources.

A conference call will be held with the CIC and BLM or USFS Project Manager, the Companies' Project Manager and Environmental Compliance Manager and the Construction Contractor's Project Manager and LEI within 24 hours to discuss the noncompliance incident and to schedule a face-to-face meeting, if necessary. The face-to-face meeting will be held with all parties to discuss the noncompliance resolution within 24 hours of the initial conference call (excluding weekends and federal holidays). After conclusion of the conference call, or meeting, the Companies and Construction Contractor(s) will need to resolve the issue(s) identified by the BLM. Once they have resolved the issue and documented the resolution method, the Companies may file a written request with the BLM to resume activities. No construction activities shall be undertaken (except emergency or safety-related) until formal approval is provided by the BLM's CIC or Project Manager. The BLM shall review and respond to the Companies' written request to resume activities within 24 hours after receipt. The BLM's response shall either approve the request or provide additional criteria that must be met prior to resumption of activities. Any additional criteria must cite the applicable law(s), agreement (s), and/or permit requirements.

Grant Suspension or Termination

In accordance with 43 CFR 2807.17(a) and 36 CFR 251.60, BLM or USFS may suspend or terminate the right-of-way grant/special-use authorization if the Companies and/or its Construction Contractor(s) does not comply with applicable laws and regulations or any terms, conditions, or stipulations of the grant/special-use authorization (e.g., excessive or continuous noncompliance activities that demonstrate a

willful disregard for the terms and conditions of right-of-way grant/special-use authorization). Prior to suspension or termination, the Companies will be notified in writing and allowed a reasonable opportunity to correct any noncompliance pursuant to 43 CFR 2807.18(a), and, if applicable, provided a hearing pursuant to 43 CFR 2807.18(b) and _36 CFR 251.60.

4.2 Variance Procedures (Unforeseen Circumstances)

The intent of this section is to inform the Companies, BLM, USFS, Construction Contractor(s), and other Project personnel of the variance request process to minimize potential costly construction delays. It is understood by the BLM, USFS, and the Companies that unforeseen circumstances will occur during construction. The need for realignments to the proposed route, access roads, and/or work areas not within the permitted Project right-of-way grant/special use authorization and not analyzed in the EIS analysis may arise. In addition, the need to make changes to construction procedures, schedule, and/or approved mitigation measures and other specific stipulations and methods may be required. Under these or similar circumstances, a variance will need to be filed and approved by the BLM and/or USFS to stay in compliance.

Where Project changes occur on private lands, the BLM and/or USFS will review all variance requests to ensure compliance with the EIS analysis, NHPA, and ESA (see Table 4-1). In addition, written approval of the Project change must be obtained from the affected landowner and provided to the Companies who will provide it to the CIC for inclusion in the Project record and End of Construction Project Report (Section 8.2 – End of Construction Project Report).

Variance requests will be generated by the Construction Contractor(s) and provided in writing to the Companies who will then review the request. The Companies will evaluate the variance request and submit it to the CIC to be processed according to the process outlined herein.

The Companies will be required to submit the variance and supporting documentation to the CIC. The CIC is responsible for providing supporting documentation and an on-the-ground perspective of the requested variance to the BLM or USFS Project Manager or designee. The CIC is given authority by the BLM to approve a Level 1 variance (see Section 4.2.1) in the field. If a Level 1 variance request is approved in the field, follow up documentation will be provided by the Construction Contractor(s) to the CIC and the Companies. On a case by case basis the CIC may be given authority by the BLM or USFS Project Manager to approve a level 2 variance (see Section 4.2.2). Authority to approve or deny Level 3 variances requests (see Section 4.2.3) is provided to the appropriate BLM or USFS Project Manager or designee. The Variance Request Process is shown in Figure 4-1.

A variance request form will be developed by the Construction Contractor(s), reviewed and approved by the Companies, and the CIC and then reviewed and approved by the BLM or USFS prior to the start of construction. The variance request form will be

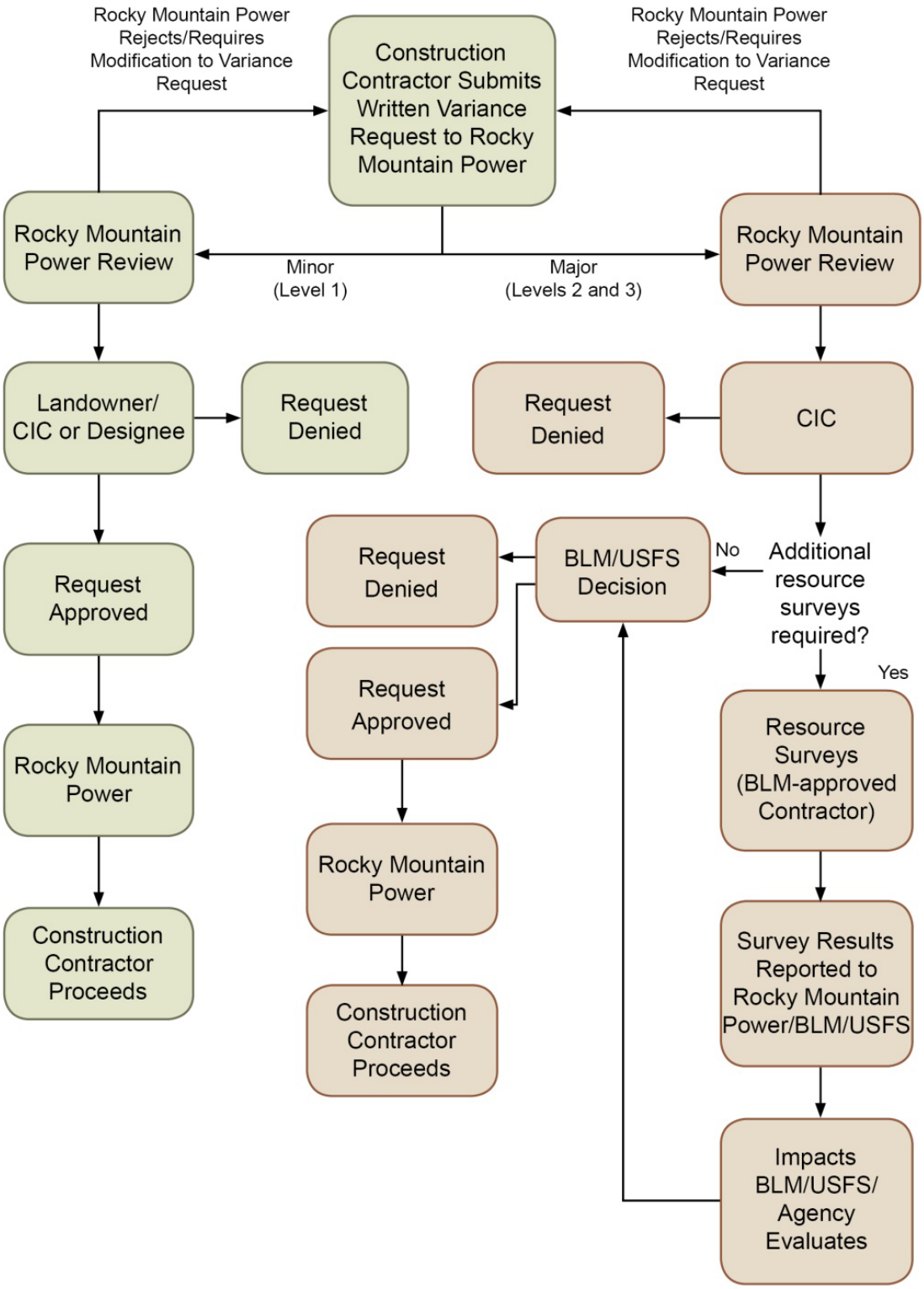

Figure 4-1. Draft Variance Request Process

incorporated into the preconstruction environmental training program. The variance request form will describe the variance request in detail, provide justification and documentation for the variance (including maps and photos), calculate the proposed permanent or temporary acreage affected, describe the original disturbance acreage analyzed in the EIS, and show the difference in acreage between the proposed variance and the original disturbance. It will also describe any potentially impacted resources and identify if additional resource surveys will be required. An example variance request form is included as Attachment A of this appendix.

The variance request may be implemented in the field as soon as the approved variance is received by the Construction Contractor(s). The CIC is responsible for communicating with the Companies regarding variance status and the Companies is responsible for communicating with the Construction Contractor(s) prior to modifications being made on the ground.

Tables 4-1 and 4-2 summarize the different variance levels, potential uses, and approvals required in order to obtain the Project variance.

Table 4-1. Summary Of Variance Procedures on Private Lands

Variance Level	Potential Use	Approval
Level 1	Minor field adjustments	CIC
Level 2	Modify POD[1]	CIC w/concurrence of BLM Project Manager (delegated authority by BLM/USFS Authorized Officer)[2]

NOTE: [1]To include maps, tables or text adequate to describe variance.
[2]Related to compliance with NHPA and ESA and consistent with analysis in the EIS

Table 4-2. Summary Of Variance Procedures on Non-Private Lands

Variance Level	Potential Use	Approval
Level 1	Minor field adjustments	CIC
Level 2	Modify POD	CIC w/concurrence of BLM Project Manager (delegated authority by BLM/USFS Authorized Officer)
Level 3	Amend right-of-way grant/special use authorization	BLM/USFS Authorized Officer

4.2.1 Level 1 Variance – Variances Accomplished through Field Resolution

A Level 1 variance is a minor field adjustment within the approved BLM right-of-way grant or USFS special-use authorization. A level 1 variance must meet the following criteria.

- The area of activity or change lies within the approved right-of-way area, including temporary use areas.
- The area of activity or change was previously identified and analyzed in the EIS.
- The area of activity or change does not result in an increase in disturbed acres than was estimated in the EIS.
- The variance creates equal to or less impact on resource values than the original location and activity (e.g., does not involve higher density wildlife habitat than the planned site or impacts on populations of sensitive plants or impacts on cultural sites, etc.)

A Level 1 variance request will be initiated by the Construction Contractor(s) and submitted to the Companies for review. The variance request form will include all attached supporting documentation. On the Companies review and approval, the Companies Environmental Compliance Manager will submit the variance request package to the CIC for their review. The CIC has been given authority by the BLM to approve these variances in the field in consultation with the Companies' Environmental Compliance Manager. However, the desired adjustments or deviations would be documented in a variance request form for inclusion in the Project record. The CIC would inform the Companies' Environmental Compliance Manager and the BLM Project Manager of these minor changes by including them in that week's progress report. Examples of minor field adjustments include, but are not limited, to the following:

- Relocation of erosion control devices (note this could also require a modification to the Stormwater Pollution Prevention Plan (SWPPP);
- Locating temporary fences inside authorized work areas;
- Permitting water bars to be extended, if applicable, off the area designated for the transmission line, and into native vegetation "one dozer length" (this includes providing permission for construction equipment to work outside designated work areas);
- Allowing rubber-tired vehicles to use additional designated access roads (in addition to those approved in BLM/USFS approval documents) where improvements to the road would not be necessary (Note: not intended for authorizing additional haul roads for equipment and materials); and
- Temporarily (for not more than seven days) placing parts or other assemblies outside areas designated in the POD but within the authorized Project area. This does not include any surface disturbance associated with temporary storage.

Level 1 Variance Approval or Denial

A CIC can approve or deny Level 1 variance requests in the field. In some cases the CIC may consult with the BLM Project Manager. Level 1 variance requests may be approved if the results of implementing the changes are not significant and will occur within the granted right-of-way. If a Level 1 request is approved in the field by the CIC, signatures on the variance request form (see Attachment A) also will be required from the Companies' Project Manager or delegate. A Level 1 variance request can be implemented in the field as soon as it is approved and signed by the CIC. In some cases a verbal approval can be given, and followed up with a written, signed variance document. The CIC will document the approved variance in the daily reports.

If a Level 1 variance is denied, the CIC will inform the Companies' Project Manager within 24 hours. The Companies' Project Manager may choose to resubmit the request as a Level 2 variance, or to discontinue pursuit of the request.

Level 1 Variance Distribution

The CIC will give/send the approved Level 1 variance request to the Companies' Project Manager, who will then distribute the approved variance on the construction side of the

Project. The CIC will provide the BLM and/or USFS Project Manager and the Companies with copies of approved Level 1 variances on a daily basis. The CIC will generate a report at the end of each week identifying all Level 1 variances approved during the previous week.

4.2.2 Level 2 Variance – Variances Beyond Field Resolution, Not Requiring an Amendment to the Right-of-way Grant or Special-use Authorization

Level 2 variances pertain to requests that exceed the field decision authority of the CIC. Level 2 variances require approval by the BLM or USFS Project Manager (delegated authority from the authorized officers) and may require agency resource staff review or field examinations. On a case by case basis the CIC may be given authority by the BLM or USFS Project Manager to approve a level 2 variance These alterations generally involve Project changes that would affect an area outside of the granted work area, but within the area previously surveyed and/or analyzed for cultural resources, Section 404 of the Clean Water Act, paleontological resources, and biological resources. Such variance requests typically require review of supplemental documents, correspondence, and records to be provided with the request. Examples include, but are not limited, to the following:

- Shifting extra workspace outside the approved construction corridor a short distance but within the area previously surveyed where overall disturbance type and acreage remains approximately the same, and no additional cultural, paleontological, biological resources, or invasive weed populations could be affected;
- Using of additional extra workspace outside of the previously approved work areas (within or outside the Project or off-Project right-of-way);
- Shifting temporary workspace to previously disturbed areas;
- Moving proposed culvert location(s) to better accommodate natural drainages (Note: may also require a modification to the SWPPP);
- Providing extra work space for topsoil and spoil material storage to prevent mixing of soils;
- Moving a range fence a specified distance laterally and permanently installing it to avoid proposed construction;
- Modifying seed mixes specified in the POD, typically due to unavailability (this may also require a modification to Appendix D – Framework Reclamation Plan; and
- Modifying of an access road due to safety hazards.

Variance requests may also be submitted for minor changes that would extend beyond the previously surveyed work area and corridor for sensitive resources. In these situations, additional cultural, biological, and invasive weed surveys would be required. Documentation of the surveys and other applicable correspondence would need to be submitted with the variance request. If sensitive biological resources are encountered during the additional surveys, documentation of consultation with applicable agencies must be provided with the variance request. All BLM- and USFS-approved stipulations,

and if applicable, the Terms and Conditions of the U.S. Fish and Wildlife Service's Biological Assessment/Opinion must be adhered to, for the variance to be approved.

Requests for exceptions from closure periods and areas will be submitted as Level 2 variances to the appropriate land management agency office in which the exception is requested. Established exception processes on BLM-managed lands will be followed. The agency, the CIC, or a contractor approved by Companies and approved by the agency will conduct the surveys and coordinate with any other agencies as necessary. Factors considered in granting the exception include animal conditions, climate and weather conditions, habitat conditions and availability, spatial considerations (e.g., travel routes and landscape connectivity), breeding activity levels, incubation or nestling stage, and timing, intensity, and duration of the proposed action. Variances will be submitted in writing no more than two weeks prior to the proposed commencement of the construction activity, to ensure that conditions during construction are consistent with those evaluated. The authorized officer, or designated representative, on a case-by-case basis, may grant exceptions to seasonal stipulations, and has the authority to cancel this exception at any time. A good faith effort will be made to act on exceptions within 5 business days of receiving a request to allow for orderly construction mobilization. The CIC will conduct any required site visit and report status to BLM for consideration of the decision to accept or deny the request. Appendix I of the EIS lists land management plan seasonal stipulations that are applicable to the extent such species are present. There is no exception process on USFS managed lands; all closure periods will be adhered to. Any proposed modifications to closure periods will be discussed on a case by case basis with the USFS.

A Level 2 variance request will be initiated by the Construction Contractor(s) and submitted to the Companies for review. The variance request form will include all attached supporting documentation.

To initiate a Level 2 variance request, the Construction Contractor will submit the variance to the Companies. The variance request form will include attached supporting documents. On the Companies review and approval, the Companies' Environmental Compliance Manager will submit the variance request package to the CIC for review. Following review, the CIC will submit the request form and attachments to the BLM and USFS Project Managers.

Level 2 Variance Approval or Denial

The BLM or USFS Project Manager, after consulting with the BLM and USFS Resource specialists, will provide the Companies' Project Manager through the CIC written approval or denial (including an explanation) of the request by using the spaces provide on the form. The BLM and USFS Project Manager or BLM/USFS representative may request additional information, or a modification of the request, before the variance can be approved. The BLM and USFS Project Managers will make a good faith effort to act on exceptions within 5 business days from receipt of a complete request and provide the Companies' Project Manager written approval of the request by using the space provided on the form.

If a Level 2 variance is denied, the BLM/USFS Project Manager will provide the Companies' Project Manager a written denial (including an explanation) of the request by using the spaces provided on the form within five business days from receipt of a complete request. The Companies' Project Manager may choose to resubmit the request as a Level 3 variance request, or to discontinue pursuit of the request.

Level 2 Variance Distribution

The CIC will give/send the approved Level 2 variance request to the Companies' Project Manager, who will then distribute the variance on the construction side of the Project. The CIC will provide the BLM/USFS Project Manager copies of approved Level 2 variances daily. The CIC will generate a report at the end of each week identifying all Level 2 variances approved during the previous week.

4.2.3 Level 3 Variance – Variances Requiring an Amendment to the Right-of-way Grant or Special-use Authorization

The BLM Project Manager will assist the CIC and Companies' Environmental Compliance Manager in determining whether a significant proposed change, outside the approved BLM/USFS right-of-way grant/special use authorization, will necessitate submittal of an amendment, or whether the change can be handled with a Variance Request Form.

Any proposed construction modification the BLM/USFS Project Manager and CIC have determined to involve substantial deviations from the right-of-way grant/special use authorization will require a grant amendment/special use authorization modification in accordance with 43 CFR 2807.20/36 CFR 251.61. A variance requiring an amendment to the right-of-way grant or modification to the special-use authorization requires completion of an application on a Standard Form 299 and a decision by the BLM/USFS Authorized Officer. The Companies' Project Manager will prepare the Standard Form 299 with supporting documentation, including but not be limited to, a POD and map of the variance area (1:24,000 scale), and will forward it to the appropriate BLM/USFS office. The BLM/USFS will process the amendment application pursuant to 43 CFR 2800/36 CFR 251.61. The BLM/USFS may request additional information, or a modification of the request, before the amendment can be approved.

Grant/special-use amendments and modifications will be reviewed by BLM/USFS staff who will consult with other federal, state, and local agencies as needed. Grant/special-use amendment or modification approvals or denials will come directly from the BLM or USFS. Approval of the grant/special-use authorization amendment also requires issuance of a NTP addressing the amendment, if a NTP is a requirement of the original right-of-way grant or special-use authorization. Examples of grant amendment or modification requests include:

- Route realignments or facility relocations onto BLM/USFS land not analyzed in the EIS and included in the right-of-way grant/special-use authorization.
- Certain project-wide changes to mitigation measures or reclamation procedures.
- Expansion of the Project area defined in the right-of-way grant/special-use authorization and POD.

- Requests affecting sites potentially eligible for the National Register of Historic Places or involving state or federally protected species or their habitat.
- Use of an existing access road that will need modification in order to be suitable for Project construction activities.

5.0 COMMUNICATIONS

Communication between all parties will be critical to maintain environmental compliance throughout the Project. Communication at the individual segment (spread) level and Project-wide will help maintain a consistent understanding of the Project's environmental requirements throughout construction. As specified in Appendix L – Framework Traffic and Transportation Monitoring Plan of the POD, the Construction Contractor(s), the CIC, and all Environmental Monitors will maintain a communications network that consists of one or both of the following devices: two-way radios or cellular phones. This will allow for immediate coordination between all parties, which will facilitate resolution of any questions and/or monitoring requirements prior to construction activities. Oral communication will not substitute for written approvals.

5.1 Primary Inter-Party Communication Channels

The following relationships are not intended to limit communication on the Project, but demonstrate the primary channels of routine communication between parties for compliance related issues.

- **BLM/USFS Project Manager** – Companies' Project Manager and Environmental Compliance Manager
- **CIC** – CIC Field Monitors, Companies' Project Manager, Environmental Compliance Manager and Construction Contractor's LEI
- **Companies' Project Manager** – Construction Contractor's Project Manager, CIC, and Companies' Environmental Compliance Manager
- **Companies' Environmental Compliance Manager** – Construction Contractor's LEI and the CIC
- **Construction Contractor's Environmental Reporting Coordinator** – CIC or designee and Construction Contractor's LEI
- **Construction Contractor's LEI** – CIC, Companies' Environmental Compliance Manager and Construction Contractor's Environmental Reporting Coordinator and Construction contractor's Environmental Inspectors
- **Construction Contractor's Project Manager** – Companies' Project Manager and Construction Contractor's Superintendents

5.2 Daily Communications

The Construction Contractor(s) will schedule and host daily morning meetings to review the location and extent of each day's construction activities. Discussion should highlight safety and environmental issues, including a summary of activities that require monitoring by Environmental Inspectors and coordination with the CIC. Evidence of

proper approvals must be furnished for any activities scheduled to occur outside designated areas. Attendees should include the CIC (or designee); the Construction Contractor's LEI, Construction Inspector, and Environmental Compliance Manager (or designee); and the Construction Contractor's Superintendent(s) and Foreman(s). Meeting topics should include:

- Safety review
- Planned work activities and locations for the day
- Right-of-way and landowner restrictions
- Available access roads
- Reminders of environmental requirements specific to the day's construction activities
- A discussion of procedures required for work in proximity to sensitive resources
- Upcoming, potential environmental issues.

In addition to the morning meeting, Superintendents, Foremen and Environmental Inspector's should evaluate the need for and conduct "tailgate" meetings in the field to address issues that come up during the day.

6.0 TRAINING

6.1 Preconstruction

All contractor construction personnel will receive environmental training prior to commencing work on the Project. Training will emphasize compliance with all environmental laws including the stipulations in the right-of-way grant/special-use authorization and POD. Project-specific requirements and local issues pertaining to variations on different spreads will be addressed as necessary. Roles of Environmental Inspectors and third-party CIC Field Monitors, civil survey flagging methodology, specific landowner issues, biological and cultural mitigation plans, and approved areas of disturbance will be some of the major topics covered in the training. The Construction Contractor's Environmental Training Coordinator will maintain a master list of all Project personnel that have completed the training and provide it immediately to the Companies or CIC upon request. Hard hat stickers demonstrating attendance of the training will be issued to attendees.

6.2 During Construction

All contractor personnel that arrive after construction has begun will attend new hire environmental awareness and compliance training. The Construction Contractor's Environmental Training Coordinator will be responsible for documenting all employees that have attended the training by maintaining a master list and provide it immediately to the Companies or CIC on request.

Trainings will be held in the field as needed to address specific and immediate issues that come up during the work day. These meetings will include Superintendents,

Foremen, operators and laborers, Construction Inspectors, and Environmental Inspectors.

Remedial training will be given to individuals and crews who are involved in noncompliant activities. These trainings will focus on the requirements pertaining to the noncompliance as well as measures to follow to prevent further noncompliance situations. These may be performed in the field or in a more formal setting to be determined by the Construction Contractor's Environmental Training Coordinator and the Construction Contractor's personnel.

Training for visitors will be held as the need arises and as appropriate for the type of visit scheduled.

7.0 REPORTING AND DOCUMENTATION

There will be multiple forms and reports completed on a regular basis during the course of construction. The reports and forms will include:

- **Daily Inspection Reports.** Environmental Inspectors and CIC Monitors will fill out daily reports to record site visits. The reports will document construction activities observed with respect to environmental compliance. Environmental Inspector reports will be submitted to the Companies and the CIC and will be available to the BLM or USFS on request. CIC Monitor reports will be submitted to the Lead CIC.
- **Weekly Compliance Reports.** The Construction Contractor's LEI will produce a weekly report documenting the week's activities and compliance issues to be submitted to the Companies and the CIC and will be available to the BLM or USFS upon request. The CIC will submit a weekly compliance report to the BLM/USFS and the Companies to be delivered to a secure but mutually exclusive websites.
- **Variance Request Forms.** Variance requests will be produced by the Construction Contractor(s), reviewed by the Companies, and submitted to the CIC for review before submittal to BLM and USFS for approval. It is critical that these forms include the proper accompanying documentation (photos, maps, alignment sheet exerts, drawings, etc.). The Construction Contractor's Environmental Reporting Coordinator will track, distribute and archive all approved and denied variances.
- **Problem Area Report Forms.** This section of the daily report will capture all information pertaining to a problem area that was documented that day. Photo documentation is required. A separate resolved problem area report may be required if the problem area is not resolved on the same day.
- **Noncompliance Report Form.** This section of the daily report will capture all information pertaining to a noncompliance that was documented that day. Photo documentation is required. A separate resolved noncompliance report may be required if the noncompliance is not resolved on the same day.
- **Weekly Training Log.** The Environmental Trainer will submit a weekly training log to the Construction Contractor's Environmental Training Coordinator and Environmental Reporting Coordinator with the names and signatures of all employees that went through environmental training that week.

Forms and reports should be submitted with digital photographs and additional supporting documentation as necessary.

8.0 PROJECT CLOSEOUT

8.1 Reclamation and Post Construction

On notification of completion of work by the Companies and the Construction Contractor(s), the CIC will coordinate with the BLM and USFS Project Managers and resource staff to conduct final on-the-ground inspections. Inspections will take place within 30 days to assure work was completed in accordance with the right-of-way grant/special-use authorization and the right-of-way reclamation activities as described in the Final Reclamation Plan. The CIC will be retained until reclamation and initial revegetation efforts are complete.

After construction reclamation activities are complete, the BLM and USFS will meet with the CIC to determine if there is any further work required. If no further work is required, the post-construction reclamation monitoring period will begin, as described in the Final Reclamation Plan. The Companies will retain the third-party CIC for post-construction reclamation monitoring activities described in Final Reclamation Plan.

8.2 End of Construction Project Report

Within 60 days of construction completion, the CIC will submit a final summary report (electronically in pdf format on two CDs; as well as two hardcopies for each BLM Field Office and national forest) to document the number of special status animals or plants taken, including the capture, displacement, mortality, injury and/or harassment by other means, during Project activities. This report will include the amount of actual temporary and permanent acreage disturbed compared with the original temporary and permanent disturbance acreage (Final EIS/POD), an electronic and hard copy compilation of all daily compliance reports (including digital pictures), variance requests (including approval/denial), temporary suspensions, and WSOs (including documentation of resolution). The Construction Contractor(s) will coordinate with the CIC to provide all applicable documentation for inclusion in the End of Construction Project Report. Completeness of the End of Construction Project Report will be verified by the CIC.

8.3 Construction Closeout Meeting

As required by the BLM and USFS, the CIC will coordinate a construction closeout meeting with the BLM, USFS, Companies, Construction Contractor(s), other field monitors and affected agencies to document all agency requirements have been met, determine areas of improvement, and ensure all issues have been satisfactorily resolved. This may include any noncompliance items that are in process.

ATTACHMENT A
DAILY INSPECTION REPORT FORM

(To be Included in Final POD)

ATTACHMENT B
VARIANCE REQUEST FORM

(To be Included in Final POD)

ATTACHMENT C
NONCOMPLIANCE FORM

(To be included in Final POD)

APPENDIX D
FRAMEWORK RECLAMATION PLAN

Appendix D

Framework Reclamation Plan

Gateway West Transmission Line Project

Prepared by:

Rocky Mountain Power
1407 W. North Temple
Salt Lake City, UT 84116

and

Idaho Power Company
1221 West Idaho Street
Boise, ID 83702

January 2013

TABLE OF CONTENTS

1.0 INTRODUCTION D-1
1.1 Purpose D-1
1.2 Reclamation Goals and Objectives D-2
2.0 TOPSOIL AND SPOIL TREATMENT D-3
3.0 RIGHT-OF-WAY RECLAMATION D-3
3.1 Seedbed Preparation D-3
3.1.1 Seeding Methods D-3
3.1.2 Seed Mixes D-3
4.0 POST-CONSTRUCTION MONITORING AND REPORTING D-4
4.1 Monitoring Activities D-4
4.2 Reporting D-4
5.0 PLAN UPDATES D-4
6.0 LITERATURE CITED D-5

LIST OF ATTACHMENTS

Attachment A Species Abundance Ratings

1.0 INTRODUCTION

Rocky Mountain Power and Idaho Power Company (Companies) are proposing to construct and operate approximately 1,000 miles of new 230-kilovolt (kV), 345-kV and 500-kV alternating current electric transmission system, called the Gateway West Transmission Line Project (Project), consisting of 10 segments between the Windstar Substation at Glenrock, Wyoming, and the Hemingway Substation approximately 30 miles southwest of Boise, Idaho. The proposed transmission line is needed to supplement existing transmission lines in order to relieve operating limitations, increase capacity, and improve reliability in the existing electric transmission grid, allowing for the delivery of up to 1,500 megawatts of additional energy for the Companies' larger service areas and to other interconnected systems. The Project includes ground-disturbing activities associated with the construction of above-ground, single-circuit transmission lines involving towers, access roads, multiuse areas, fly yards, and pulling sites as well as associated substations, communication sites, and electrical supply distribution lines. The Project crosses private land and public lands administered by the Bureau of Land Management (BLM), U.S. Forest Service (Forest Service), and the states of Idaho and Wyoming.

It is the responsibility of the Companies and/or the Construction Contractor(s), working with the Compliance Inspection Contractor (CIC) and BLM Project Manager, to ensure appropriate reclamation activities are implemented during the construction of project facilities and all federal, state, county, and other local requirements are satisfied. This document provides a template for the detailed Final Reclamation Plan to be developed by the Construction Contractor.

1.1 Purpose

This preliminary reclamation plan describes the framework for the development of the final Reclamation Plan. The focus of this framework and the final Reclamation Plan is to restore areas that have been impacted by construction activities. The framework and final Reclamation Plan are applicable Project-wide and will be modified as per agreements with federal land-managing agencies, states, counties, or individual landowners. The final Reclamation Plan will be based on the final selected location of all Project facilities and will be submitted to the BLM and Forest Service prior to the issuance of the construction Notice-to-Proceed. The final plan will be developed by the Construction Contractor."

This framework and the final Reclamation Plan incorporate the Stormwater Pollution Prevention Plan (SWPPP) that will be developed to comply with Clean Water Act of 1972 (CWA) requirements. The SWPPP includes measures to address erosion and sedimentation that could result from ground-disturbing activities. The SWPPP is standalone document and is incorporated by reference into this document and the final Reclamation Plan. Environmental protection measures (EPMs) contained in Appendix Z of the Plan of Development (POD) are currently being discussed with the Agencies. When these discussions are completed, finalized measures will be listed herein and in the SWPPP. Measures to control noxious and invasive weeds are described in Appendix E – Framework Noxious Weed Plan.

1.1.1 Reclamation Goals and Objectives

The primary goal of conducting reclamation activities is to restore temporarily disturbed areas to pre-construction conditions to the extent practical. BLM reclamation goals emphasize the stabilization and protection of existing vegetation; minimal disturbance of the environment; soil stabilization; and the establishment of vegetation consistent and compatible with adjacent land uses. The goal of this framework is to provide a structure for developing and implementing the reclamation process, which is designed to restore temporary impacts to vegetation and resident soils and meet the following goals and objectives:

- Noxious- and invasive-weed control,
- Topsoil segregation and stockpiling,
- ROW restoration,
- Seedbed preparation and re-seeding, and
- Road reclamation.

Reclamation goals can be achieved through short- and long-term objectives. The short-term objectives for reclamation are to stabilize disturbed areas to minimize potential erosion and sedimentation, establish temporary vegetation cover, prevent or minimize the introduction and spread of noxious- and invasive-weed species, and conserve suitable topsoil for long-term reclamation activities. The long-term objective of reclamation is to establish permanent vegetation cover that is similar to pre-disturbance conditions, self-sustaining, and, where applicable, resistant to the introduction or spread of noxious- and invasive-weed species.

Measures to achieve reclamation goals include the following:

- Use proper soil-management techniques, including stripping, stockpiling, and re-applying topsoil material at temporarily disturbed areas to restore soil horizons, use the existing seedbank(s), and establish surface conditions that would allow for the rapid re-establishment of vegetative cover.
- Establish stable soil surface and drainage conditions and use applicable best-management practices (BMP) that would minimize surface erosion and sedimentation and facilitate plant establishment.
- Conduct pre-construction weed surveys.
- Perform pre-construction weed-control treatments at locations identified by pre-construction weed surveys (areas with large weed infestations within or adjacent to the Project ROW).
- Conduct post-construction weed monitoring for 3 years.
- Perform post-construction weed treatment (e.g., re-seeding and/or site restoration) to pre-disturbance conditions as documented by pre-construction surveys.
- Re-establishing topography to pre-construction conditions to the extent practicable.

2.0 TOPSOIL AND SPOIL TREATMENT

The Companies and/or their Construction Contractor will minimize ground disturbance where practical; however, there will still be extensive areas of soil disturbance due to the nature of the work and existing topography. The final Reclamation Plan will identify locations where the management of topsoil is warranted, such as areas where topsoil supports native plant species or is important to a private landowner (e.g., agricultural soils). Generally, topsoil is considered the upper 6 to 12 inches, but this can vary by soil type. EPMs developed for topsoil removal and replacement are contained in Appendix Z of the POD.

3.0 RIGHT-OF-WAY RECLAMATION

Reclamation of temporarily disturbed areas will involve replacing stockpiled subsoil and topsoil (where applicable), restoring pre-existing contours, installing permanent erosion-control structures (i.e., water bars), and re-establishing vegetation.

Some areas may not have extensive vegetation before Project construction, such as areas of shallow bedrock, shallow topsoil, steep slopes, or dry desert soils. These areas will be identified during pre-construction surveys and will not be re-seeded. Where appropriate, other reclamation activities (e.g., restoring pre-construction contours) will be conducted.

3.1 Seedbed Preparation

As part of the reclamation process, the Companies will prepare the seedbed to facilitate the restoration of vegetation to pre-construction conditions. General measures are discussed as follows, and habitat-specific seedbed measures will be provided in the final Reclamation Plan.

Soil amendments are intended to minimize soil erosion and subsequent sedimentation, conserve soil moisture, provide cover, and moderate temperatures to facilitate the germination of seeds. Measures regarding seedbed preparation are contained in Appendix Z of the POD.

3.1.1 Seeding Methods

Unless otherwise directed, following seedbed preparation, seed will be applied using a broadcast spreader, drill, and/or hydroseeder depending on site conditions and seed mix. Seeding will be done after ground-disturbing activities are complete and at the appropriate time of year (preferably in the fall or, if fall is not an option, the spring). If there is a lag time between the end of ground-disturbing activities and seeding, BMPs from the SWPPP will be implemented. Measures regarding seeding methods are contained in Appendix Z of the POD.

3.1.2 Seed Mixes

The choice of seed mixtures will be dependent on the existing vegetation types, the availability of commercial, weed-free live seed at the time of seeding, and landowner approval. The final Reclamation Plan will identify proposed seed mixes based on specific vegetation communities (e.g., sagebrush, grassland, etc.) and will include the species, cultivar (if applicable), percent seed mix, pure live seeds per acre, and the application rate. Proposed mixes will not be applied prior to landowner notification.

The Companies will re-seed some permanently disturbed areas as well. Roads created for the Project that are necessary for the long-term operation and maintenance of the transmission line are considered a permanent impact; however, the Companies will re-seed these areas as an EPM. The intent of this re-seeding differs from the long-term objective of establishing plant communities and habitat. Therefore, the final Reclamation Plan will also include one or more seed mixes that will be used as a BMP for permanently disturbed areas.

4.0 POST-CONSTRUCTION MONITORING AND REPORTING

The Companies will conduct post-construction surveys for a 2-year period following the conclusion of ground-disturbing activities.

4.1 Monitoring Activities

Successful revegetation will be determined by monitoring reclaimed areas against existing conditions. Species and relative density will be assessed annually and compared to baseline data collected prior to the start of ground-disturbing activities. Reclamation will be determined successful if the seeded areas have germinated and are demonstrating that they will, over time, achieve a distribution and diversity similar to pre-construction conditions. If after a second growing season problem areas have been identified (e.g., seed germination is lower than expected; prevalence of noxious-weed species), the area will be treated and re-seeded. Treatment may include additional seedbed preparation, control of noxious weeds, use of soil amendments, and/or use of another appropriate seed mix. Monitoring reclamation activities and remedial measures on private lands will be up to the landowner and agreements they negotiate with the Companies.

4.2 Reporting

The Companies will document pre-construction observations, construction reclamation activities, and post-construction monitoring on federally and state-managed lands in an annual report. Annual reports will be prepared for submittal to federal or state entities that administer public lands in the Project area. The reports will provide a summary of Project reclamation activities and observations and include recommendations for additional corrective actions if necessary.

5.0 PLAN UPDATES

The final Reclamation Plan will be prepared. prior to the start of construction. As the Companies better define the construction order and schedule, the final Reclamation Plan will be updated to include the schedule for baseline vegetation and weed surveys and identification of any areas for pre-construction noxious-weed treatment, and a more detailed reclamation schedule and plan.

6.0 LITERATURE CITED

Forest Service (U.S. Forest Service). 1990. FSM Chapter 2840—Reclamation. Available online at http://www.fs.fed.us/im/directives/fsm/2800/2840.txt

ISDA (Idaho State Department of Agriculture). 2011. Idaho's 64 Noxious Weeds. Available online at: http://www.agri.state.id.us/Categories/PlantsInsects/NoxiousWeeds/watchlist.php

National Invasive Species Information Center. 2011. Invasive Species. Available online at http://www.invasivespeciesinfo.gov/whatis.shtml. Modified February 8, 2011.

NRCS (National Resource Conservation Service). 2009. PLANTS Database. Available online at: http://plants.usda.gov/java/

Sheley, R.L., and J.K. Petroff. 1999. Biology and Management of Noxious Rangeland Weeds. Oregon State University. Corvallis, Oregon.

University of Montana-Missoula. 2009. INVADERS Database System. Available online at: http://invader.dbs.umt.edu/

Wyoming Weed and Pest. 2008a. Wyoming Weed and Pest Control Designated List. Available online at http://www.wyoweed.org/Documents/DocumentPage/WYOMINGWEEDList.pdf

Wyoming Weed and Pest. 2008b. Declared List of Weeds and Pests: Wyoming Weed and Pest Control Act of 1973.

ATTACHMENT A
SPECIES ABUNDANCE RATINGS

ABUNDANCE RATINGS

Rare:

Difficult to find; limited to 1 or very few individuals or colonies; < 1 percent of the total sample unit area; found in more than 1 place along the sample unit.

Locally Rare:

Difficult to find; limited to 1 or very few individuals or colonies; < 1 percent of the total sample unit area; found at only 1 site within the sample unit.

Occasional:

Widely scattered individuals or colonies but not difficult to find; 1–5 percent of the total sample unit area; found in more than 2 sites within the sample unit.

Locally Occasional:

Scattered individuals or colonies but not difficult to find; 1–5 percent of the total sample unit area; found in only 1 or 2 sites within the sample unit.

Frequent:

Easily found but not dominant in any one place; 5–25 percent of the total sample unit area; a moderate number of occurrences over a good portion of the sample unit.

Locally Frequent:

Easily found but not dominant in any one place; 5–25 percent of the total sample unit area; a moderate number of occurrences over a small portion of the sample unit.

Abundant:

Easily found; dominant or co-dominant in 1 or more areas; > 25 percent of the total sample unit; a high number of occurrences over most of the sample unit.

Locally Abundant:

Easily found; dominant or co-dominant in 1 or more areas; > 25 percent of the total sample unit; a high number of occurrences over a small portion of the sample unit.

APPENDIX E
FRAMEWORK NOXIOUS WEED PLAN

Appendix E

Framework Noxious Weed Plan

Gateway West Transmission Line Project

Prepared by:

PacifiCorp
1407 W. North Temple
Salt Lake City, UT 84116

and

Idaho Power Company
1221 West Idaho Street
Boise, ID 83702

January 2013

TABLE OF CONTENTS

1.0 INTRODUCTION.....E-1

1.1 Background.....E-1
1.2 Purpose.....E-1
1.3 Goals and Objectives.....E-1

2.0 NOXIOUS WEED INVENTORY.....E-2

2.1 State Listed Noxious Weeds.....E-2

3.0 NOXIOUS WEED MANAGEMENT.....E-8

3.1 Identification of Problem Areas and Education.....E-8
3.1.1 Weed Management Personnel Requirements.....*E*-8
3.2 Other Specific Stipulations and Methods.....E-9
3.2.1 Preventive Measures.....*E*-9
3.2.2 Reclamation Actions.....*E*-9
3.3 Agency Requirements.....E-9

4.0 MONITORING.....E-9

4.1 Reclamation Monitoring.....E-10
4.2 Ongoing Monitoring.....E-10

5.0 PESTICIDE APPLICATION, HANDLING, SPILLS, AND CLEANUP.....E-10

5.1 Pesticide Application and Handling.....E-10
5.2 Pesticide Spills and Cleanup.....E-10

6.0 LITERATURE CITED.....E-11

LIST OF TABLES

Table E- 1. Invasive and Noxious Plant Species Potentially Present in the Gateway West Project Analysis Area.....E-4

LIST OF ATTACHMENTS

Attachment A BLM-approved Pesticides

1.0 INTRODUCTION

1.1 Background

Rocky Mountain Power and Idaho Power Company (Companies) are proposing to construct and operate approximately 1,000 miles of new 230-kilovolt (kV), 345-kV and 500-kV alternating current electric transmission system, called the Gateway West Transmission Line Project (Project), consisting of 10 segments between the Windstar Substation at Glenrock, Wyoming, and the Hemingway Substation approximately 30 miles southwest of Boise, Idaho. The proposed transmission line is needed to supplement existing transmission lines in order to relieve operating limitations, increase capacity, and improve reliability in the existing electric transmission grid, allowing for the delivery of up to 1,500 megawatts of additional energy for the Companies' larger service areas and to other interconnected systems. The Project includes ground-disturbing activities associated with the construction of above-ground, single-circuit transmission lines involving towers, access roads, multiuse areas, fly yards, and pulling sites as well as associated substations, communication sites, and electrical supply distribution lines. The Project crosses private land and public lands administered by the Bureau of Land Management (BLM), U.S. Forest Service (Forest Service), and the states of Idaho and Wyoming.

The format and content of this framework Noxious Weed Plan based on the principles and procedures outlined in the BLM Integrated Weed Management Manual 9015 (1992). This Plan includes a discussion on 1) the plan purpose and goals and objectives, 2) the noxious weed inventory, 3) management practices, 4) monitoring, and 5) the use of pesticides/herbicides. This document provides a template for the detailed Final Noxious Weed Plan to be developed by the Construction Contractor.

1.2 Purpose

The Wyoming Weed and Pest Council and the Idaho State Department of Agriculture (ISDA) have identified noxious weeds that occur within the states of Wyoming and Idaho. Some of these noxious weeds have the potential to occur on the Project right-of-way. This framework Noxious Weed Plan provides methods to control the potential occurrence/infestation of noxious weeds during and following construction of the Project. It is the responsibility of the Companies and/or the Construction Contractor(s), working with the Compliance Inspection Contractor (CIC) and BLM Project Manager, to ensure noxious weeds are identified and controlled during the construction of project facilities and all federal, state, county, and other local requirements are satisfied. The control of invasive species is addressed in Appendix D – Framework Reclamation Plan.

1.3 Goals and Objectives

The goal of this framework Noxious Weed Plan is to implement early detection, containment, and control of noxious weeds during Project construction. Information gathered during pre-construction surveys and provided by the BLM will be used to monitor and control the spread of noxious weeds that may pose a potential infestation threat during the construction and operation of the transmission line in areas on or adjacent to the Project. General preventive and treatment measures are described in Section 3.0 of this plan. Weed management environmental protection measures (EPMs)

are contained in Appendix Z of the Plan of Development (POD), currently being discussed with the Agencies. When these discussions are completed, finalized measures will be listed herein. An evaluation of the effectiveness of the prescribed control measures (Section 4.0) also will be implemented during the operational phase of the transmission line.

Noxious weed is a legal term meaning any plant officially designated by a federal, state, or local agency as injurious to public health, agriculture, recreation, wildlife, or property (Sheley and Petroff 1999). The more general term *invasive species* refers to species that are non-native to the ecosystem under consideration and whose introduction causes, or is likely to cause, economic or environmental harm or harm to human health (National Invasive Species Information Center 2011). Invasive plant species include those legally designated as noxious, as well as additional species that may be considered noxious in some areas but not others, and other species that are already widespread.

Soil disturbances, such as those caused by the construction of the Project, could result in the establishment of new populations and spread of existing populations of noxious and invasive weeds. This section of the framework describes the known status of noxious-weed species within the Project area, the regulatory agencies responsible for the control of noxious and invasive weeds, and steps the Companies will take in preventing the establishment and spread of noxious- and invasive-weed species that are the result of Project construction activities. In addition to providing updated information contained within this framework, the final Noxious Weed Plan will include information on locations of significant weed populations within the Project footprint and proposed treatment methods as applicable.

The focus of the Companies' noxious-weed control efforts will be to prevent the spread of new infestations resulting from the Companies' activities. The Companies are only responsible for the control of noxious weeds and invasive species that are a result of their construction-related, surface-disturbing activities. The Companies are not responsible for noxious weeds and invasive species that occur adjacent to Project areas or for controlling or eradicating a species that was present prior to the Project. For example, cheatgrass *(Bromus tectorum)* is widespread across large portions of the Project area. Eradication of these infestations is not the responsibility of the Companies and would not be attempted.

2.0 NOXIOUS WEED INVENTORY

The noxious weed inventory for the Project will include 1) the identification of weed species designated noxious by the States of Wyoming and Idaho and having the potential to occur within the area affected by the Project, and 2) the gathering of information to identify specific noxious weed populations in the Project area, including pre-construction surveys along the Project right-of-way.

2.1 State Listed Noxious Weeds

Table E-1 contains a list of the noxious-weed species known or expected to occur within the Project area based on their recorded presence in the counties where the Project is located. The BLM and Forest Service use the most current Idaho and Wyoming state noxious-weed lists for managing weeds on federal lands. The final Noxious Weed Plan

will include the most current noxious-weed species lists produced by the two states just prior to construction.

The State of Wyoming has designated 25 plant species as noxious (Wyoming Weed and Pest Council 2012) and the ISDA has designated 64 plant species as noxious. Idaho's noxious weeds are divided into three categories (ISDA 2011):

- Statewide Early Detection and Rapid Response (EDRR) List: If weeds on this list are identified, they will be reported to ISDA within 10 days, and eradicated in the same growing season as identified.
- Statewide Control List: This list contains species that are known to exist throughout the state. When identified, a control plan will be developed by the county, with active control methods to be employed in no more than 5 years.
- Statewide Containment List: Weed list: This list contains species that are known to exist throughout the state. Weed control efforts may be directed at reducing or eliminating new or expanding populations, while known populations may be managed by any approved weed control methodology, as determined by the county.

Table E- 1. Invasive and Noxious Plant Species Potentially Present in the Gateway West Project Analysis Area

Common Name	Scientific Name	Invasive Exotic Species?[1]	Listed as Noxious[2]			Segments in Which Known or Likely to Occur[2,3]	
			State of Wyoming (Designated)	Wyoming Counties (Declared)	State of Idaho[4]	Wyoming	Idaho
Species on Wyoming or Idaho Noxious Weed List							
Black henbane	*Hyoscyamus niger*	Yes	--	Albany, Converse, Lincoln, Natrona, Sweetwater	Control	All	All
Buffalobur	*Solanum rostratum*	Yes	--	Converse, Natrona	Control	All	8, 9
Canada thistle	*Cirsium arvense*	Yes	X		Containment	All	All
Common burdock	*Arctium minus*	Yes	X	--	--	, 1W, 2, 4	All
Common St. Johnswort	*Hypericum perforatum*	Yes	X	--	--	4	8
Common Tansy	*Tanacetum vulgare*	Yes	X	--	--	All	5, 7
Dalmatian toadflax	*Linaria dalmatica*	Yes	X	--	Containment	All	All
Diffuse knapweed	*Centaurea diffusa*	Yes	X	--	Containment	All	All
Dyer's woad	*Isatis tinctoria*	Yes	X	--	Control	All	All
Eurasian watermilfoil	*Myriophyllum spicatum*	Yes	--	--	Control	--	8
Field bindweed	*Convolvulus arvensis*	Yes	X	--	Containment	All	All
Hairy whitetop, Hoary cress	*Cardaria pubescens*	Yes	X	--	--	All	All
Houndstongue	*Cynoglossum officinale*	Yes	X	--	Containment	, 1W, 2, 4	4, 5, 7
Johnsongrass	*Sorghum halepense*	Yes	--	--	Control	--	5. 7, 8
Jointed goatgrass	*Aegilops cylindrica*	Yes	--	Converse	Containment	, 1W	All
Leafy spurge	*Euphorbia esula*	Yes	X	--	Containment	All	All
Matgrass	*Nardus stricta*	Yes	--	--	Control	--	5
Musk thistle	*Carduus nutans*	Yes	X	--	Control	All	All
Orange hawkweed	*Hieracium aurantiacum*	Yes	--	Converse	Control	--	5, 7, 8
Oxeye daisy	*Chrysanthemum leucanthemum*	Yes	X	--	Containment	, 1W, 2, 4	4, 7
Perennial pepperweed	*Lepidium lapathifolium*	Yes	X	--	Containment	All	All
Perennial sowthistle	*Sonchus arvensis*	Yes	X	--	Control	All	All

Table E-1: Invasive and Noxious Plant Species Potentially Present in the Gateway West Project Analysis Area (continued)

Common Name	Scientific Name	Invasive exotic species?[1]	Listed as Noxious[2]			Segments in Which Known or Likely to Occur[2,3]	
			State of Wyoming (Designated)	Wyoming Counties (Declared)	State of Idaho[4]	Wyoming	Idaho
Meadow hawkweed, yellow hawkweed	*Hieracium pretense, H. caespitosum*	Yes	--	--	Control	--	7
Plumeless thistle	*Carduus acanthoides*	Yes	X	--	Control	, 1W	--
Poison hemlock	*Conium maculatum*	Yes	--	--	Containment	, 1W, 2, 3	All
Puncture vine	*Tribulus terrestris*	Yes	--	Natrona	Containment	, 1W, 2	All
Purple loosestrife	*Lythrum salicaria*	Yes	X	--	Containment	--	All
Quackgrass	*Agropyron repens*	Yes	X	--	--	All	All
Rush skeletonweed	*Chondrilla juncea*	Yes	--	Converse	Containment	--	5, 7, 8, 9, 10
Russian knapweed	*Acroptilon repens*	Yes	X	--	Control	All	All
Russian olive	*Elaeagnus angustifolia*	Yes	X	--	--	, 1W	All
Salt cedar, tamarisk	*Tamarix spp.*	Yes	X	--	Containment	All	All
Scotch broom	*Cytisus scoparius*	Yes	--	Converse	Control	--	5, 9
Scotch thistle	*Onopordum acanthium*	Yes	X	--	Containment	, 1W, 4	All
Skeletonleaf bursage	*Artemisia tomentosa*	Yes	X	--	Control	All	5, 7, 8, 10
Spotted knapweed	*Centaurea maculosa*	Yes	X	--	Containment	All	All
Silverleaf nightshade	*Solanum Elaeagnifolium*	Yes	--	--	Control	--	8, 10
Syrian beancaper	*Zygophyllum zabago*	Yes	--	Converse	EDRR	--	5
Tansy ragwort	*Senecio jacobaea*	Yes	--	Converse	Containment	--	5
Vipers blugloss	*Echium vulgare*	Yes	--	--	Control	--	8
Whitetop, hoary cress	*Cardaria draba*	Yes	X	--	Containment	, 1W, 2, 4	All
Yellow starthistle	*Centaurea solstitialis*	Yes	--	--	Containment	--	All
Yellow toadflax	*Linaria vulgaris*	Yes	X	--	Containment	, 1W, 2, 4	All
Absinth wormwood	*Artemisia absinthium*	Yes	--	Converse	--	, 1W	8
Baby's breath	*Gypsophila paniculata*	Yes	--	Converse	--	--	--
Bull thistle	*Cirsium vulgare*	Yes	--	Converse, Lincoln	--	All	All
Bur buttercup	*Ranunculus testiculatus*	Yes	--	Converse	--	All	All

Table E-1: Invasive and Noxious Plant Species Potentially Present in the Gateway West Project Analysis Area (continued)

Common Name	Scientific Name	Invasive exotic species?[1]	Listed as Noxious[2]			Segments in Which Known or Likely to Occur[2,3]	
			State of Wyoming (Designated)	Wyoming Counties (Declared)	State of Idaho[4]	Wyoming	Idaho
Other Species							
Cheatgrass/downy brome	*Bromus tectorum*	Yes	--	Albany, Natrona	--	All	All
Chicory	*Cichorium intybus*	Yes	--	Converse	--	, 1W	All
Common cocklebur	*Xanthium strumarium*	Yes	--	Converse	--	All	All
Common crupina	*Crupina vulgaris*	Yes	--	Converse	--	--	--
Common mullein	*Verbascum thapsus*	Yes	--	Converse	--	All	All
Common sunflower	*Helianthus annuus*	Native	--	Converse	--	, 1W	--
Curlycup gumweed	*Grindelia squarrosa*	Native	--	Natrona	--	1W	--
Curly dock	*Rumex crispus*	Yes	--	Converse	--	All	All
Dames rocket	*Hersperis matronalis*	Yes		Converse	--	, 1W, 2, 4	4, 5, 7, 9
Foxtail barley	*Hordium jubatum*	Native	--	Sweetwater	--	3, 4	--
Geyer larkspur	*Delphinium geyeri*	Native	--	Albany, Carbon	--	, 1W, 2, 3	--
Goatsrue	*Galega officinalis*	Yes	--	Converse	--	--	--
Gorse	*Ulex europaeus*	Yes	--	Converse	--	--	--
Halogeton	*Halogeton glomeratus*	Yes	--	Carbon, Converse, Natrona,	--	All	5, 7, 8, 9
Iberian starthistle	*Centaurea iberica*	Yes	--	Converse	--	, 1W	--
Italian thistle	*Carduus pycnocephalus*	Yes	--	Converse	--	--	--
Japanese brome	*Bromus japonicus*	Yes	--	--	--	All	All
Lady's bedstraw	*Galium verum*	Yes	--	Converse	--	2, 3, 4	7
Meadow knapweed	*Centaurea nigrescens*	Yes	--	Converse	--	--	--
Medusahead	*Taeniatherum caput-medusae*	Yes	--	Converse	--	--	8
Mountain thermopsis	*Thermopsis montana*	Native	--	Sweetwater	--	3, 4	--
Musk mustard, blue mustard	*Chorispora tenella*	Yes	--	Converse	--	All	All
Plains pricklypear	*Opuntia polyacantha*	Native	--	Carbon	--	, 1W, 2, 3	--
Redstem filaree	*Erodium cicutarium*	Yes	--	--	--		All
Russian thistle	*Salsola iberica*	Yes	--	--	--	All	All

Table E-1: Invasive and Noxious Plant Species Potentially Present in the Gateway West Project Analysis Area (continued)

Common Name	Scientific Name	Invasive exotic species?[1]	Listed as Noxious[2]			Segments in Which Known or Likely to Occur[2,3]	
			State of Wyoming (Designated)	Wyoming Counties (Declared)	State of Idaho[4]	Wyoming	Idaho
Sandbur	*Cenchrus incertus*	Native	--	Converse	--	--	--
Scentless chamomile	*Tripleurospermum inodorum*	Yes	--	Converse	--	All	8, 9
Showy milkweed	*Asclepias speciosa*	Native	--	Converse	--	, 1W	--
Squarrose knapweed	*Centaurea virgata*	Yes	--	Converse	--	--	--
Sulfur cinquefoil	*Potentilla recta*	Yes	--	Converse	--	--	5, 7
Teasel	*Dipsacus fullonum*	Yes	--	Converse		--	All
Wild licorice	*Glycyrrhiza lepidota*	Native	--	Converse, Natrona	--	, 1W	--
Wild oats	*Avena fatua*	Yes	--	Lincoln	--	All	All
Wyeth's lupine	*Lupinus wyethii*	Native	--	Converse	--	, 1W	--

[1] Included in INVADERS database (University of Montana-Missoula 2009).
[2] Source for status: ISDA 2012; Wyoming Weed and Pest 2008. "—"= not listed.
[3] Distribution based on INVADERS database (University of Montana-Missoula 2009), PLANTS database (NRCS 2009), and ISDA (2008). Distribution of native species is only shown for Wyoming counties where listed as noxious.
[4] Idaho listing categories are explained in text.

3.0 NOXIOUS WEED MANAGEMENT

Regulatory agencies along the proposed transmission alignment, and specifically the BLM, have varying requirements for weed management. A pre-construction survey for noxious weeds will be conducted using the protocol established by the BLM's Integrated Weed Management Manual 9015 (BLM 1992) and as required by the US Forest Service (USFS),

The management of noxious weeds will be considered throughout all stages of the Project including:

- Educating all construction personnel regarding the identified problem areas and the importance of preventive measures and treatment methods.
- Specific preventive measures to prevent the spread of noxious weeds.
- Pre- and post-construction treatment methods to be applied to areas of noxious weed infestation.

Following is a description of the measures that may be required for noxious weed management as directed by the BLM or State Quarantine Officer. Applicable measures will be agreed upon prior to the onset of any ground-disturbing activities, and this Noxious Weed Plan will be modified accordingly.

3.1 Identification of Problem Areas and Education

Prior to the initiation of construction activities, all construction personnel will be instructed on the importance of controlling noxious weeds. As part of start-up activities, the Construction Contractor will provide information and training regarding noxious weed management. The importance of preventing the spread of noxious weeds in areas not infested and controlling the proliferation of weeds already present will be emphasized. Prior to construction, areas of concern previously identified during the Weed Survey will be flagged by the Construction Contractor and reviewed by the CIC. This flagging will alert construction personnel and prevent area access until noxious weed management control measures, as described below, have been implemented.

3.1.1 Weed Management Personnel Requirements

Weed management actions shall be carried out by a weed management specialist with the following qualifications:

- Training and experience in native plant taxonomy/identification;
- Training and experience in field ecology and plant community mapping;
- Training in weed management or Integrated Pest Management with an emphasis in weeds;
- Experience in coordination with agency and private landowners; and,
- Recent attendance at a BLM-approved noxious weed training course

3.2 Other Specific Stipulations and Methods

3.2.1 Preventive Measures

Preventive measures will be implemented to prevent the spread of noxious weeds during the construction activities, as well as during reclamation and rehabilitation efforts. Detailed information regarding reclamation, along with the control of noxious plant species, is contained in Appendix Z of the POD. Prevention and control methods may include mechanical, cultural, biological, or chemical measures to prevent and control noxious weeds associated with Project activities. The weed specialist working in conjunction with the BLM and CIC will identify areas where noxious weed control measures will be implemented.

3.2.2 Reclamation Actions

As specified in Appendix D of the POD, areas where weed control measures have been implemented and require post-construction reclamation actions (i.e., seeding) will follow the specific stipulations and methods presented as EPMs contained in Appendix Z of the POD.

3.3 Agency Requirements

Noxious weeds will be monitored and controlled during both construction and operation of the Project. Noxious weeds identified within the Project area will be reported to the applicable land-managing agency in whose jurisdiction the weeds occur. The appropriate weed control procedures, including target species, timing of control, and method of control, will be determined in consultation with the applicable land-managing agency. If herbicides are considered for use to control noxious weeds, the type of herbicide and methods of use would be approved by the applicable land-managing agency prior to their use. Monitoring surveys will be conducted following treatment of infected areas. These monitoring surveys are expected to occur in the fall (August–September) and would be conducted following the same methods as the pre-construction survey. Annual herbicide spraying would be planned and coordinated with the applicable agencies (based on the results of the prior years' survey data) to ensure spraying is conducted only where necessary, in areas approved for herbicide use, at the proper growing period, during favorable environmental conditions, and using only the appropriate and agency approved chemicals to control targeted species.

The Companies may be able to take advantage of any existing cooperative agreements between the land-managing agencies and the counties by providing the funds required for county personnel to implement the necessary weed control procedures. If not, the Companies will be responsible for providing the necessary personnel or hiring a Contractor to implement the weed control procedures with the qualifications as described in Section 3.1.

4.0 MONITORING

A weed management specialist, contracted by the Companies, will monitor the Project and any other areas of disturbance associated with the Project for a period not to exceed 5 years. Monitoring will be conducted annually in the fall, more specifically during the life cycle of the species identified during pre-construction inventories. This

monitoring may coincide with the reclamation monitoring identified and outlined in Appendix D of the POD. Growing seasons will vary from year to year, and consequently the length of monitoring will vary as well.

4.1 Reclamation Monitoring

During reclamation monitoring, the Companies, or the representative contractor(s) for the Companies, will initiate monitoring of previously identified affected/disturbed areas during the first spring following construction and proceed with monitoring during subsequent intervals.

Noxious weed monitoring will occur annually for up to 3 years following completion of each segment of the Project. In addition, noxious weed conditions will be included in the evaluations of revegetation success as described in Appendix D of the POD. The Companies will document their observations following the above noted field inspections and make these monitoring reports available to the local, state and federal agencies, as required.

Areas where the spread of a noxious weed infestation is noted, particularly in previously unaffected locations, will be further evaluated to determine if these areas require remedial action and additional treatment. The Companies will identify such areas to the agencies by state, county, and milepost (or nearest transmission structure number) and will record any additional noxious weed control treatments. A report summarizing right-of-way stability, revegetation progress, percent of cover, and weed infestation will be provided to the BLM as described in Appendix D of the POD.

4.2 Ongoing Monitoring

The Companies will consult with the agencies and counties should they have a concern pertaining to noxious weeds within their jurisdiction. The agencies may also contact the Companies to report on the presence of noxious weeds. The Companies will control weeds on a case-by-case basis, per previous agreements or contracts, the Companies will implement suitable and timely measures within the right-of-way to address the weed threat, as well as to suppress and help control new infestations that occur solely within the right-of-way, insofar as possible.

5.0 PESTICIDE APPLICATION, HANDLING, SPILLS, AND CLEANUP

5.1 Pesticide Application and Handling

The list of pesticides to be used (see Attachment A) will be reviewed and approved by the BLM and USFS, and pesticide application will be based on information gathered from the Weed Districts and agencies. Before application, all required permits from the local authorities will be obtained. Permits may contain additional terms and conditions that go beyond the scope of this management plan. Application of pesticides will follow the EPMs contained in Appendix Z of the POD.

5.2 Pesticide Spills and Cleanup

All reasonable precautions will be taken to avoid pesticide spills. EPMs describing pesticide spills and cleanup, worker safety, and spill reporting are presented in Appendix Z of the POD.

Additional information regarding the handling of hazardous materials may be found in Appendix P – Framework Hazardous Material Management Plan and Appendix G - Framework Spill Prevention, Containment and Countermeasures Plan.

6.0 LITERATURE CITED

BLM (Bureau of Land Management). 1992. Weed Management Manual (Manual 9015). Available online at: http://www.blm.gov/ca/st/en/prog/weeds/9015.html

BLM. 2007a. Final Vegetation Treatments Using Herbicides Programmatic Environmental Impact Statement. FES 07-21. USDI BLM. Available online at http://www.blm.gov/wo/st/en/prog/more/veg_eis.html

BLM. 2007b. Chemical Pest Control Manual (Manual 9011). Available online at: http://www.blm.gov/ca/st/en/prog/weeds/9011.html

ISDA (Idaho State Department of Agriculture). 2011. Idaho's 64 Noxious Weeds. Available online at: http://www.agri.state.id.us/Categories/PlantsInsects/NoxiousWeeds/watchlist.php

NRCS (National Resource Conservation Service). 2009. PLANTS Database. Available online at: http://plants.usda.gov/java/

University of Montana-Missoula. 2009. INVADERS Database System. Available online at: http://invader.dbs.umt.edu/

Wyoming Weed and Pest Council. 2008a. Wyoming Weed and Pest Control Designated List. Available online at http://www.wyoweed.org/Documents/DocumentPage/WYOMINGWEEDList.pdf

Wyoming Weed and Pest Council. 2008b. Declared List of Weeds and Pests: Wyoming Weed and Pest Control Act of 1973.

ATTACHMENT A
BLM-APPROVED PESTICIDES

BLM-APPROVED PESTICIDES

- 2,4-D
- Bromacil
- Chlorsulfuron
- Clopyralid
- Dicamba
- Diuron
- Glyphosate
- Hexazinone
- Imazapyr
- Metsulfuron methyl
- Picloram
- Sulfometuron methyl
- Tebuthiuron
- Triclopyr

APPENDIX F
FRAMEWORK STORMWATER POLLUTION PREVENTION PLAN

Appendix F

Framework Stormwater Pollution Prevention Plan

Gateway West Transmission Line Project

Prepared by:

PacifiCorp
1407 W. North Temple
Salt Lake City, UT 84116

and

Idaho Power Company
1221 West Idaho Street
Boise, ID 83702

January 2013

TABLE OF CONTENTS

1.0 INTRODUCTION.....F-1
2.0 PURPOSE.....F-1
3.0 NOTIFICATION REQUIREMENTS AND IMPLEMENTATION.....F-2
4.0 PROJECT MODIFICATIONS F-3
5.0 OTHER SPECIFIC STIPULATIONS AND METHODS.....F-3
6.0 MITIGATION MAINTENANCE, INSPECTION, REPAIR, AND MONITORING.....F-3
7.0 TRAINING.....F-4
8.0 POST-CONSTRUCTION STORMWATER MANAGEMENT.....F-4

1.0 INTRODUCTION

Rocky Mountain Power and Idaho Power Company (Companies) are proposing to construct and operate approximately 1,000 miles of new 230-kilovolt (kV), 345-kV and 500-kV alternating current electric transmission system, called the Gateway West Transmission Line Project (Project) consisting of 10 segments between the Windstar Substation at Glenrock, Wyoming, and the Hemingway Substation approximately 30 miles southwest of Boise, Idaho. The proposed transmission line is needed to supplement existing transmission lines in order to relieve operating limitations, increase capacity, and improve reliability in the existing electric transmission grid, allowing for the delivery of up to 1,500 megawatts of additional energy for the Companies' larger service areas and to other interconnected systems. The Project includes ground-disturbing activities associated with the construction of above-ground, single-circuit transmission lines involving towers, access roads, multiuse areas, fly yards, and pulling sites as well as associated substations, communication sites, and electrical supply distribution lines. The Project crosses private land and public lands administered by the Bureau of Land Management (BLM), U.S. Forest Service (Forest Service), and the states of Idaho and Wyoming.

In compliance with criteria in the U.S. Environmental Protection Agency's (USEPA's) Clean Water Act, all construction site operators engaged in clearing, grading, and excavating activities that disturb one acre or more must obtain a National Pollutant Discharge Elimination System (NPDES) permit for stormwater discharges (Code of Federal Regulations, Title 40, Parts 122 and 123). NPDES permits (also called Construction General Permits) are issued by EPA or similar authorized state entity following submittal of a Notice of Intent (NOI) for construction activities, and preparation of a Stormwater Pollution Prevention Plan (SWPPP) that describes how erosion and sediment transport will be minimized to adjacent waterbodies. Measures to ensure that construction activities comply with state and EPA requirements for stormwater management to be incorporated into the SWPPP are outlined in this plan. This document provides a template for the detailed Final SWPPP Plan to be developed by the Construction Contractor.

2.0 PURPOSE

The purpose of a SWPPP is to identify and implement stormwater pollution prevention measures to reduce the quantity of impacted runoff, and to deal with runoff in a manner minimizing environmental impacts during construction, operation, and maintenance of the Project.

A SWPPP is needed to minimize the volume of contaminated runoff, including sediment runoff, and to implement mitigation measures in a manner minimizing environmental impacts. Temporary stabilization methods (silt-fences, straw bales, etc.) are not guaranteed or fail-safe measures without regular maintenance and field inspection throughout construction activities. In addition to conventional methods of erosion control there are numerous new and improved products and the Construction Contractor is encouraged to review these progressive or improved materials in the development and implementation of a SWPPP.

The proper implementation of mitigation measures associated with a SWPPP is imperative during all construction activities. These activities will be conducted in an environmentally sensitive and responsible manner so no discharge of sediment or contaminants may be conveyed as either direct or indirect discharge to wetlands, waters of the United States, or the States of Wyoming and Idaho Waters.

Development, implementation, and maintenance of the SWPPP will provide the Construction Contractor with the framework for reducing soil erosion and minimizing pollutants in stormwater during construction. The SWPPP will:

- Define the characteristics of the site and the type of construction that will be occurring.
- Describe the practices that will be implemented to control erosion and the release of pollutants in stormwater.
- Create an implementation schedule to ensure the practices described in the SWPPP are in fact implemented, and to evaluate the plan's effectiveness in reducing erosion, sediment, and pollutant levels in stormwater discharge from the site.
- Describe the final stabilization/termination design to minimize erosion and prevent stormwater impacts after construction is complete.

3.0 NOTIFICATION REQUIREMENTS AND IMPLEMENTATION

Before construction begins, the Construction Contractor will be responsible for developing a SWPPP, and obtaining coverage under the NPDES General Permit by filing an NOI and appropriate fee with the USEPA Region 10 for Idaho and the Wyoming Department of Environmental Quality (WDEQ) in accordance with NOI instructions. The Construction Contractor will be responsible for implementing a site-specific SWPPP and is required to perform routine inspections throughout the duration of construction activities.

The primary intent of the erosion and sediment control measures is to control and minimize erosion at the source. For the Project, the main source of potential stormwater contamination will be erosion of soils from construction activities. It will be the responsibility of the Construction Contractor to implement erosion control measures where necessary, in order to minimize pollutants in stormwater, and to keep the Project in compliance with USEPA, WDEQ, and Idaho Department of Environmental Quality regulations.

A copy of the SWPPP shall remain with the Construction Manager on the construction site or at a staging area(s), and be readily available while the transmission line and substations are under construction, from the start of construction activities until completion of reclamation for the Project.

The Construction Contractor must retain a set of construction site maps for the duration of the Project, and for 3 years after the Notice of Termination, that delineate the following items:

- Areas of soil disturbance that have been stabilized,

- Areas to be graded along with a time schedule,
- Areas of potential soil erosion where control practices will be implemented,
- Types of control practices and time schedule for implementation,
- Locations of any post-construction projects, and
- Copies of all inspections performed over the duration of the Project.

4.0 PROJECT MODIFICATIONS

The Construction Contractor is responsible for maintaining an up-to-date SWPPP and shall amend the SWPPP whenever there is a change in construction or operations that may affect the discharge of pollutants to surface waters or groundwater. The SWPPP shall also be amended if it is in violation of the General Permit or has not achieved the general objective of eliminating pollutants in stormwater discharges. The SWPPP shall be amended and implemented in a timely manner, but in no case more than 14 days after it has been determined that the SWPPP is inadequate. All amendments should be dated and directly attached to the SWPPP. The USEPA or WDEQ may require the discharger to amend the SWPPP.

5.0 OTHER SPECIFIC STIPULATIONS AND METHODS

Environmental protection measures to ensure construction activities comply with state and USEPA requirements for stormwater management to be incorporated into the SWPPP are described in Appendix Z of the Plan of Development.

6.0 MITIGATION MAINTENANCE, INSPECTION, REPAIR, AND MONITORING

The Construction Contractor shall at all times properly operate and maintain any facilities and systems of treatment and control (and related appurtenances). Proper operation and maintenance also include appropriate quality assurance procedures. Proper operation and maintenance may require the operation of backup or auxiliary facilities or similar systems if construction takes place in an above average precipitation year.

The Construction Contractor will be required to conduct routine maintenance and emergency repair on any structural controls, including the maintenance of erosion and sediment control measures and any required subsequent reporting. As part of the SWPPP, the Construction Contractor will be required to develop an inspection schedule and conduct routine inspections to identify conditions that could lead to discharges of chemicals or contact of stormwater with storm drainages or surface waters. Schedules will be established for regular inspections of equipment and areas. Inspections of the construction site shall occur In accordance with the General permit applicable to each state to identify areas contributing to a stormwater discharge and to evaluate whether industry standards are in place and functioning properly. For storm events with extended durations, observations shall be performed every 24 hours. During inspections, the Construction Contractor will also determine if the industry standards

identified in the SWPPP are adequate and whether additional control practices are needed. All monitoring and inspection records which have been produced in association with this SWPPP will be retained for a period of at least 3 years.

To monitor the mitigation's effectiveness and to evaluate whether additional mitigation measures are required, a monitoring program and reporting system will be followed. As part of this program, weather conditions should be monitored to prepare for precipitation events. It is recommended that weather forecasts be checked at least every week.

7.0 TRAINING

The Construction Contractor will be responsible for the SWPPP implementation, amendments, and revisions. On-site construction personnel will be responsible for installation and maintenance of on-site mitigation measures.

Properly trained personnel are more capable of preventing spills, responding safely and effectively to accidents, and recognizing situations that could lead to stormwater contamination. The Construction Contractor will be responsible for familiarizing their personnel with the information contained within the SWPPP. Training meetings will need to be held for new personnel who join the Project after the initial training has been provided. The purpose of these meetings will be to review the proper installation methods and maintenance of all erosion control measures to be used for the Project. The monitoring/inspection program and all required maintenance and repair will be conducted by trained personnel.

8.0 POST-CONSTRUCTION STORMWATER MANAGEMENT

Mitigation measures used to reduce pollutants in stormwater discharges after all construction phases have been completed at the sites should take into account local post-construction storm water management requirements, policies, and guidelines, as well as site-specific and seasonal conditions. Post-construction mitigation measures will be assessed during future line maintenance. During line maintenance, any areas disturbed by the line installation that are observed to be eroding sediment into drainages will be assessed for the appropriate permanent mitigation measure to control sediment movement off the disturbed area. Disturbed areas will also be reclaimed per Appendix D – Framework Reclamation Plan.

APPENDIX G
FRAMEWORK CONSTRUCTION SPILL PREVENTION, CONTAINMENT, AND COUNTERMEASURES PLAN

Appendix G

Framework Construction Spill Prevention, Containment, and Countermeasures Plan

Gateway West Transmission Line Project

Prepared by:

PacifiCorp
1407 W. North Temple
Salt Lake City, UT 84116

and

Idaho Power Company
1221 West Idaho Street
Boise, ID 83702

January 2013

TABLE OF CONTENTS

1.0 INTRODUCTION G-1
2.0 PURPOSE G-1
3.0 RESPONSIBILITY OF IMPLEMENTATION G-1
4.0 PREVENTIVE PROCEDURAL ACTIONS G-1
4.1 Storage, Refueling, and Lubrication Areas G-1
4.2 General Petroleum Products, Quantities, and Storage G-2
4.2.1 Special Refueling Activities G-2
4.2.2 Waste Removal G-2
4.3 Spill and Emergency Response for Hazardous Substances G-3
5.0 ENVIRONMENTAL PROTECTION G-4
6.0 EMERGENCY CONTACTS G-4

LIST OF TABLES

Table G-1. Federal and State Emergency Contacts G-4

1.0 INTRODUCTION

Rocky Mountain Power and Idaho Power Company (Companies) are proposing to construct and operate approximately 1,000 miles of new 230-kilovolt (kV), 345-kV and 500-kV alternating current electric transmission system, called the Gateway West Transmission Line Project (Project), consisting of 10 segments between the Windstar Substation at Glenrock, Wyoming, and the Hemingway Substation approximately 30 miles southwest of Boise, Idaho. The proposed transmission line is needed to supplement existing transmission lines in order to relieve operating limitations, increase capacity, and improve reliability in the existing electric transmission grid, allowing for the delivery of up to 1,500 megawatts of additional energy for the Companies' larger service areas and to other interconnected systems. The Project includes ground-disturbing activities associated with the construction of above-ground, single-circuit transmission lines involving towers, access roads, multiuse areas, fly yards, and pulling sites as well as associated substations, communication sites, and electrical supply distribution lines. The Project crosses private land and public lands administered by the Bureau of Land Management (BLM), U.S. Forest Service (Forest Service), and the states of Idaho and Wyoming.

2.0 PURPOSE

The Companies have developed this Framework Spill Prevention, Containment, and Countermeasures (SPCC) Plan for the Project to provide preventive procedural actions, standard mitigation measures, and other specific stipulations and methods to minimize the environmental impact associated with spills or releases of fuel, lubricant, or hazardous materials, during construction and refueling activities and during special refueling activities within 100 feet of waterbodies, wetland boundaries, or within municipal watersheds.

This document will provide a template for the development of a detailed SPCC Plan to be developed by the Construction Contractor which differs from the SPCC plans designed and developed for substations or areas where large volumes of materials (e.g. oils, fuels, etc.) are stored.

3.0 RESPONSIBILITY OF IMPLEMENTATION

The Companies, through their Construction Contractor(s) and inspectors, shall be responsible for the implementation of the procedural actions, mitigation measures, and other specific stipulations and methods. The Construction Contractor will comply with applicable federal, state, and local regulations applicable to the location of refueling, storage, waste removal, and other activities involving fuels and hazardous materials.

4.0 PREVENTIVE PROCEDURAL ACTIONS

The following preventive actions and procedures shall be accomplished prior to construction.

4.1 Storage, Refueling, and Lubrication Areas

Prior to the start of construction in an area, the Construction Contractor shall designate locations for storage, refueling, and lubrication of equipment and materials, minimizing the environmental and safety impacts associated with releases of fuel, lubricants, or hazardous substances. These areas will be designated using the following actions.

- Storing of fuel, lubricant, or hazardous materials within 100 feet of a waterbody, wetland boundary, or within a designated municipal watershed shall be prohibited, unless the

location is designated for such use by an appropriate governmental authority. This applies to storage of these materials and does not apply to normal operation or use of equipment in these areas.

- No potentially hazardous materials, other than essential equipment fuels (e.g., gasoline, diesel, etc.) or standard lubricants (e.g., engine oils, grease, etc.) shall be transported onto the right-of-way or construction area without coordination and approval.
- Heavy equipment used in the Project area will be inspected daily for leaks.
- To prevent introduction of petrochemicals into the waters of Wyoming and Idaho, fuel, oil, hydraulic fluid, lubricants, and other petrochemicals stored within a floodplain must have an appropriately sized impervious secondary containment system to prevent spills. The permittee shall contain and remove any petrochemical spills, including contaminated soil, and dispose of these materials at an approved disposal site.

4.2 General Petroleum Products, Quantities, and Storage

Typical fuels used in the Project area include diesel and gasoline. Typical lubricants used include engine oil, transmission/drive train oil, hydraulic oil, gear oil, and general lubricating grease. Typical coolants used are glycols (anti-freeze).

Quantity of fuel storage varies, but is usually approximately 6,000 to 12,000 gallons, stored in tanks or tankers at contractor yards. Smaller quantities are sometimes stored temporarily in the construction area along the right-of-way. Fuel transport is typically accomplished by the use of fuel trucks for larger quantities, and by pickup trucks transporting smaller quantities from 5 to 100 gallons. Lubricants and coolants are generally stored in bulk or retail packaging at contractor yards in quantities typically less than 500 gallons and transported in trucks to the construction area as needed.

Fuel and lubricant containers of all volumes will be stored within secondary containment. Secondary containment will be able to hold the volume of the largest container stored within the containment structure.

4.2.1 Special Refueling Activities

When unique conditions require refueling within 100 feet of a waterbody, wetland boundary, or within any designated municipal watersheds, a determination of necessary emergency response actions shall be conducted prior to refueling activities. In addition, absorbent materials or other spill containment materials shall be available for immediate application prior to commencing refueling activities. Fuel trucks transporting fuel to on-site equipment will travel only on approved access roads.

Each construction crew shall have on hand sufficient supplies of absorbent, barrier materials, and U.S. Department of Transportation–approved containers to allow for rapid containment and recovery of any spill of hazardous material.

4.2.2 Waste Removal

Procedures and individual responsibilities regarding excavation, transportation, and off-site disposal of any soil-contaminated material from a spill of a hazardous material shall be established prior to construction.

Whenever any spill of a hazardous or potentially hazardous substance occurs, the Companies shall be notified. The Companies will help direct further response actions in accordance with U.S. Environmental Protection Agency and other regulatory requirements and assist throughout the cleanup and disposal of wastes.

4.3 Spill and Emergency Response for Hazardous Substances

Prior to construction, the contractor shall submit a hazardous material management and emergency preparedness and response plans (see Appendices P and Q) to the Companies for approval. The plans shall comply with all applicable federal, state, and local regulations and shall reference the applicable regulations.

The plan shall include measures and procedures for characterizing, storing, handling, and disposing of hazardous substances and for emergency response operations.

The plan shall include, but not be limited to, spill control, cleanup, notification, characterization, and disposal procedures. All contractor supervisors and personnel handling hazardous substances shall be familiar with these procedures.

- Spill Control: Following a spill, efforts shall be made to immediately control the source of the discharge and contain the spill. Absorbent materials shall be deployed with efforts directed to limiting the area of contamination. Every effort shall be made to prevent any spill from reaching wetlands or waterbodies. If a spill should reach surface waters, straw bales, booms, and absorbent materials shall be immediately deployed to contain and reduce downstream migration of the spilled material.
- Cleanup: Once a spill is contained, cleanup activities shall begin immediately. All spilled material, contaminated soil, and absorbent material shall be picked up and contained for disposal. In the event of a large spill or a spill that migrates into surface waters, waste cleanup specialists shall be called to assist in cleanup efforts. Prior to beginning construction the contractor shall be required to submit prior to beginning construction a list of cleanup contractors for approval.
- Spill Report Form: Following any spill, the contractor shall submit a spill report form for distribution to the Companies' Environmental Coordinator.
- Disposal: The Companies will provide a list of commercial disposal facilities for contractor's reference. The contractor is responsible for arranging disposal with these facilities or other approved facilities as appropriate.
- Waste Identification: All waste identification/characterization, handling, labeling, storage, manifesting, transportation, record-keeping, and disposal shall be in accordance with all applicable federal, state, and local regulations and ordinances and shall be the responsibility of the contractor.
- Documentation: The contractor will be required to provide the Companies with copies of sample results, shipping manifests, chain-of-custodies, and bill-of-lading for wastes transported for disposal upon request. The documentation will also describe the type and quantity of waste material disposed of.
- Material Safety Data Sheet: The contractor shall maintain Material Safety Data Sheets for diesel fuel, gasoline, lubrication oil, and other hazardous materials used on the Project at each location where these materials are stored.
- Field Notification: As soon as possible after beginning spill control and cleanup activities, contractor shall notify the Companies, who will determine if the spill is reportable. Notification of appropriate agencies will be the responsibility of the Project Construction Contractor.
- Any amount of any material in such quantity as may, with reasonable probability, injure or be detrimental to human health, animal, plant life, property, or may unreasonably interfere with the public welfare or the use of property must be reported. This includes chemical, biohazardous, petroleum-product, and sewage spills and incidents. In addition

to recent spills, the discovery of evidence of previous unauthorized discharges, such as contaminated soil or groundwater, also must be reported.

- Agency Notification: Agency notification will be made of reportable spills. Written reports of the spills into state waters of oil or hazardous substances and materials will be provided as directed.

5.0 ENVIRONMENTAL PROTECTION

Environmental protection measures will be applied Project-wide and will address many of the concerns associated with spills. These measures are contained in Appendix Z of the Plan of Development currently being discussed with the Agencies. When these discussions are completed finalized measures will be listed herein.

6.0 EMERGENCY CONTACTS

Table G-1 contains a list of federal and state contacts in the event of a hazardous chemical emergency.

Table G-1. Federal and State Emergency Contacts

Agency to be Contacted	Contact Name	Phone/Address
Federal		
U.S. EPA Region 10 Emergency Response Center	–*	–*
U.S. EPA Region 8 Emergency Response Center	–*	–*
BLM, Casper Field Office	–*	–*
BLM, Rawlins Field Office	–*	–*
BLM, Rock Springs Field Office	–*	–*
BLM, Kemmerer Field Office	–*	–*
BLM, Pocatello Field Office	–*	–*
BLM, Burley Field Office	–*	–*
BLM, Shoshone Field Office	–*	–*
BLM, Jarbidge Field Office	–*	–*
BLM, Bruneau Field Office	–*	–*
BLM, Four Rivers Field Office	–*	–*
BLM, Owyhee Field Office	–*	–*
USFS, Caribou Targee National Forest	-*	-*
USFS, Medicine Bow National Forest	-*	-*
USFS, Sawtooth National Forest	-*	-*
State		
Wyoming Department of Environmental Quality	–*	–*
Idaho Department of Environmental Quality	–*	–*

* To be provided in final plan.

APPENDIX H
FRAMEWORK PLANT AND WILDLIFE CONSERVATION MEASURES PLAN

Appendix H

Framework Plant and Wildlife Conservation Measures Plan

Gateway West Transmission Line Project

Prepared by:

Idaho Power Company
1221 West Idaho Street
Boise, ID 83702

and

Rocky Mountain Power
1407 W North Temple
Salt Lake City, UT 84116

January 2013

TABLE OF CONTENTS

1.0 INTRODUCTION H-1
1.1 Purpose H-1
1.2 Contents H-1
2.0 PROJECT CONSTRUCTION H-2
3.0 SPECIES CONSIDERED FOR THE PLAN H-2
4.0 DEVELOPMENT OF CONSERVATION PLAN H-6
4.1 Avoidance and Minimization Development and Implementation H-6
4.1.1 Proposed Route and Substation Siting H-6
4.1.2 Planned ROW Refinement H-8
4.1.3 Construction Scheduling and Monitoring H-8
4.2 Development of Conservation Measures H-8
4.2.1 Land-Management Plans H-8
4.2.2 EPM Selection H-9
4.2.3 Applicability H-10
5.0 PROPOSED PLANT AND WILDLIFE CONSERVATION PLAN H-10
6.0 LITERATURE CITED H-11

LIST OF TABLES

Table 3-1. Species Protected in the Plant and Wildlife Conservation Plan H-3
Table 4-1. Land-Management Plans for the Project H-9

1.0 INTRODUCTION

Rocky Mountain Power and Idaho Power Company (Companies) are proposing to construct and operate approximately 1,000 miles of new 230-kilovolt (kV), 345-kV and 500-kV alternating current (AC) electric transmission system consisting of 10 segments between the Windstar Substation at Glenrock, Wyoming, and the Hemingway Substation approximately 30 miles southwest of Boise, Idaho. The proposed transmission line is needed to supplement existing transmission lines in order to relieve operating limitations, increase capacity, and improve reliability in the existing electric transmission grid, allowing for the delivery of up to 1,500 megawatts (MW) of additional energy for the Companies' larger service areas and to other interconnected systems. The Project includes ground-disturbing activities associated with the construction of above-ground, single- circuit transmission lines involving towers, access roads, staging areas, fly yards, pulling sites as well as associated substations, communication sites, and electrical supply distribution lines. The Project crosses private land and public lands administered by the Bureau of Land Management (BLM), U.S. Forest Service (USFS), and the states of Idaho and Wyoming.

This document presents the plan proposed by the Companies for the avoidance and minimization of impacts to special-status plant (SSP) and wildlife species as related to construction activities for the Gateway West Transmission Line Project (Project). This plan summarizes the avoidance and minimization conducted during siting and routing of the Project components and outlines specific environmental protection measures (EPMs) to be implemented if state- or federally-listed species, Bureau of Land Management (BLM) sensitive species, or U.S. Forest Service (USFS) special-status species or their habitats are identified within, or adjacent to, the Project right-of-way (ROW). The Companies have prepared and submitted a separate plan that addresses avoidance and minimization measures related to operations, maintenance, and emergency activities.

1.1 Purpose

The objectives of this plan are to recognize the substantial effort already invested by the Companies in avoiding and minimizing impacts on SSP and wildlife species and to present a comprehensive, Project-specific plant and wildlife conservation plan that does the following:

- Provides consistency across jurisdictions
- Meets the intent of the current BLM and USFS management guidance for federal lands
- Balances cost, practicality, and feasibility of Project implementation with avoiding or minimizing environmental impacts

1.2 Contents

The components of this plan include the following:

- **Section 2**: Brief background on the proposed transmission line and substation construction, operations, maintenance, and emergency response procedures (a complete description can be found in the Date Plan of Development [POD], of which this plan is a part).
- **Section 3**: A list of the special-status species that the Companies and the agencies (BLM, USFS, U.S. Fish and Wildlife Service [FWS], Idaho Department of Fish and Game [IDFG], and Wyoming Game and Fish Department [WGFD]) have identified as occurring

or potentially occurring within the Project area, and explanations of how the proposed measures are appropriate and will meet the intent of the BLM and USFS land-management plan (LMP) restrictions.

- **Section 4**: A summary of the avoidance and minimization measures used by the Companies in conjunction with the agencies during corridor and ROW routing and substation siting, and the assumptions made during that process
- **Section 5**: Temporal and spatial restrictions the Companies propose to implement to avoid or minimize direct impacts to special-status species, together with the conditions under which the Companies propose that restrictions could be limited or lifted, including the methods to be used to determine where and when the measures will apply across the Project.

2.0 PROJECT CONSTRUCTION

Appendix B of the POD provides detailed information regarding the components of the transmission system including the transmission structures, communications system, and the substations. It also provides detailed information on construction methods, construction schedule, operation and maintenance, and proposed decommissioning.

3.0 SPECIES CONSIDERED FOR THE PLAN

The following steps were taken by the Companies to determine which species and habitats to consider for avoidance, minimization, and conservation measures:

- Identified potential habitats and special-status species that may occur along the proposed corridor using available data from federal and state wildlife agencies, the BLM, and the USFS
- Discussed habitat types and special-status species at kickoff meetings with agency resource specialists to identify which species are of greatest concern in the Project area
- Refined the list of species and habitats to be addressed in Project plans through several subsequent meetings with state and federal agency resource specialists

Table 3-1 presents the special-status species discussed in this Plan. Conservation measures for construction activities for fish species are addressed Appendix Z of the POD. Several additional species were analyzed, and some had protocol-level surveys conducted; however, these are not addressed further in this conservation plan because they are not expected to be adversely affected by the Project due to a lack of occurrence in the Project area, lack of direct impact to the species or its habitats from the Project, or a low level of anticipated impact at the population level. Other species not listed in this table will be analyzed in other Project documents but are not addressed further in this conservation plan because they were not identified as primary concerns for the Project.

Table 3-1. Species Protected in the Plant and Wildlife Conservation Plan

Species	Regulatory Status within Project Area	Analysis	Included in Conservation Plan?
Big Game			
Bighorn sheep (*Ovis canadensis*)	USFS WY Sensitive, BLM ID Sensitive	BE	Yes
Elk (*Cervus elaphus*)	None	EIS	Yes
Moose (*Alces alces*)	None	EIS	Yes
Mule deer (*Odocoileus hemionus*)	None	EIS	Yes
Pronghorn (*Antilocapra americana*)	None	EIS	Yes
Selkirk Mountains woodland caribou (*Rangifer tarandus caribou*)	USFWS ID Endangered	BA	
Other Mammals			
American marten (*Martes americana*)	USFS WY Sensitive and MIS	BE and EIS	
Black-footed ferret (*Mustela nigripes*)	USFWS WY Endangered; USFWS Shirley Basin experimental population WY	BA and EIS	Yes
Black-tailed prairie dog (*Cynomys ludovicianus*)	USFWS removed as Candidate, USFS WY Sensitive. BLM WY Sensitive	BE and EIS	No
Canada lynx (*Lynx canadensis*)	USFWS WY and ID Threatened	BA and EIS	No
Fringed myotis (*Myotis thysanodes*)	USFS WY Sensitive, BLM ID and WY Sensitive	BE and EIS	
Gray wolf (*Canis lupus*)	USFWS WY Nonessential experimental population, USFWS ID De-listed; USFS ID sensitive	BE and EIS	No
Grizzly bear (*Ursus arctos*)	USFWS WY and ID Threatened, USFS WY Sensitive	BA and EIS	
Kit fox (*Vulpes macrotis*)	USFS WY Sensitive, BLM ID Sensitive	BE and EIS	
Northern Idaho ground squirrel (*Spermophilus brunneus*)	BLM WY Sensitive	EIS	No
Preble's meadow jumping mouse (*Zapus hudsonius preblei*)	USFWS WY Threatened, USFS WY Sensitive, BLM WY Sensitive	BA and EIS	No
Pygmy rabbit (*Brachylagus idahoensis*)	BLM WY and ID Sensitive; USFS ID Sensitive	EIS	Yes
Southern Idaho ground squirrel (*Spermophilus brunneus*)	USFWS ID Candidate	EIS	No
Spotted bat (*Euderma maculatum*)	USFS WY and ID Sensitive, BLM ID and WY Sensitive	BE and EIS	
Swift fox (*Vulpes velox*)	USFS WY Sensitive, BLM WY Sensitive	BE and EIS	
Townsend's big-eared bat (*Corynorhinus townsendii*)	USFS WY and ID Sensitive, BLM WY Sensitive	BE and EIS	
White-tailed prairie dog (*Cynomys leucurus*)	BLM WY Sensitive	EIS	Yes
Wolverine (*Gulo gulo*)	USFWS Candidate, USFS WY and ID Sensitive; BLM ID Sensitive	BE and EIS	No
Wyoming pocket gopher (*Thomomys clusius*)	BLM WY Sensitive	EIS	No
Raptors			

Species	Regulatory Status within Project Area	Analysis	Included in Conservation Plan?
Bald eagle (*Haliaeetus leucocephalus*)	USFWS De-listed WY and ID 2007; USFS WY and ID Sensitive BLM WY Sensitive, MBTA; BGEPA	BE and EIS	Yes
Boreal owl (*Aegolius funereus*)	USFS ID Sensitive, MBTA	BE and EIS	
Burrowing owl (*Athene cunicularia*)	BLM WY Sensitive; MBTA	BE and EIS	Yes
Ferruginous hawk (*Buteo regalis*)	BLM WY and ID Sensitive; USFS WY Sensitive; MBTA	BE and EIS	Yes
Flammulated owl (*Otus flammeolus*)	USFS WY and ID Sensitive; BLM ID Sensitive; MBTA	BE and EIS	Yes
Golden eagle (*Aquila chrysaetos*)	MBTA; BGEPA	EIS	Yes
Great gray owl (*Strix nebulosa*)	USFS ID Sensitive	BE and EIS	
Northern goshawk (*Accipiter gentilis*)	BLM WY and ID Sensitive; USFS WY and ID Sensitive; WY and ID USFS MIS; MBTA	BE and EIS	Yes
Northern harrier (*Circus cyaneus*)	USFS WY Sensitive, MBTA	BE and EIS	
Peregrine falcon (*Falco peregrinus*)	USFS WY and ID Sensitive, BLM ID and WY Sensitive, MBTA	BE and EIS	
Short-eared owl (*Asio flammeus*)	USFS WY Sensitive, MBTA	BE and EIS	
All other raptors	MBTA	EIS	Yes
Other Avian			
Brewer's sparrow (*Spizella breweri*)	USFS WY Sensitive, BLM ID and WY Sensitve, MBTA	BE and EIS	
Chestnut-collared longspur (*Calcarius ornatus*)	USFS WY Sensitive, MBTA	BE and EIS	
Columbian sharp-tailed grouse (*Tympanuchus phasianellus columbianus*)	BLM WY and ID Sensitive; USFS WY and ID Sensitive; ID USFS MIS	BE and EIS	No
Grasshopper sparrow (*Ammodramus savannarum*)	USFS WY Sensitive, MBTA	BE and EIS	
Greater sage grouse (*Centrocercus urophasianus*)	USFWS WY and ID Candidate; BLM WY and ID Sensitive; USFS WY and ID Sensitive; ID USFS MIS	BE and EIS	Yes
Greater sandhill crane (*Grus canadensis*)	MBTA	EIS	Yes
Interior least tern (*Sterna antillarum athalassos*)	USFWS Endangered, MBTA	BA and EIS	
Lewis's woodpecker (*Melanerpes lewis*)	USFS WY Sensitive, BLM ID Sensitive, MBTA	BE and EIS	
Loggerhead shrike (*Lanius ludovicianus*)	USFS WY Sensitive, BLM ID and WY Sensitive, MBTA	BE and EIS	
Long-billed curlew *(Numenius americanus)*	USFS WY Sensitive, BLM WY Sensitive, MBTA	BE and EIS	Yes
McCown's longspur (*Calcarius mccownii)*	USFS WY Sensitive, MBTA	BE and EIS	
Mountain plover (*Charadrius montanus*)	BLM WY Sensitive; MBTA	BE and EIS	Yes
Mountain quail (*Oreortyx pictus*)	BLM ID Sensitive	BE and EIS	No
Olive-sided flycatcher (*Contopus cooperi*)	USFS WY Sensitive, BLM ID Sensitive, MBTA	BE and EIS	
Piping plover (*Charadrius melodus*)	USFWS Threatened, MBTA	BA and EIS	
Sage sparrow (*Amphispiza belli*)	USFS WY Sensitive, BLM ID and WY Sensitive, MBTA	BE and EIS	
Three-toed woodpecker (*Picoides dorsalis*)	WY USFS Sensitive, ID USFS Sensitive; MBTA	BE and EIS	Yes

Species	Regulatory Status within Project Area	Analysis	Included in Conservation Plan?
Trumpeter swan (*Cygnus buccinator*)	USFS ID Sensitive, BLM ID and WY Sensitive, MBTA	EIS	
Western yellow-billed cuckoo (*Coccyzus americanus*)	USFWS WY and ID Candidate; BLM WY Sensitive; MBTA	EIS	No
Whooping crane (*Grus americana*)	USFWS Endangered	BA and EIS	
Amphibians			
Boreal toad (*Bufo boreas boreas*)	USFS WY Sensitive, BLM WY and ID Sensitive; USFS ID Sensitive	EIS	No
Columbia spotted frog (*Rana luteiventris*)	USFWS WY and ID Candidate, USFS ID Sensitive, BLM WY Sensitive	EIS	No
Great Basin spadefoot toad (*Spea intermontana*)	BLM WY Sensitive	BE and EIS	No
Northern leopard frog (*Rana pipiens*)	BLM WY Sensitive; USFS WY and ID Sensitive; BLM ID Sensitive	BE and EIS	No
Wyoming toad (*Bufo hemiophrys baxteri*)	USFWS WY Endangered	BA and EIS	No
Fish			
Bonneville cutthroat trout (*Oncorhynchus clarki utah*)	USFS ID Sensitive, BLM ID and WY Sensitive	BE and EIS	No
Bonytail (*Gila elegans*)	USFWS Endangered	BA and EIS	No
Bull trout (*Salvelinus confluentus*)	USFWS ID Threatened	BA and EIS	No
Chinook salmon (*Oncorhynchus tschawytscha*)	USFWS ID Threatened	BA	
Colorado pikeminnow (*Ptychocheilus lucius*)	USFWS Endangered	BA and EIS	No
Humpback chub (*Gila cypha*)	USFWS Endangered	BA and EIS	No
Kendall warm springs dace (*Rhinichthys osculus thermalis*)	USFWS WY Endangered	BA and EIS	
Pallid sturgeon (*Scaphirhynchus albus*)	USFWS Endangered	BA and EIS	No
Razorback sucker (*Xyrauchen texanus*)	USFWS Endangered	BA and EIS	No
Sockeye salmon (*Oncorhynchus nerka*)	USFWS ID Endangered	BA	
Steelhead (*Oncorhynchus mykiss*)	USFWS ID Threatened	BA	
White sturgeon (*Acipenser transmontanus*)	USFWS ID Endangered, BLM ID Sensitive	BA	
Invertebrates			
Banbury Springs limpet (*Lanx* sp.)	USFWS ID Endangered	BA and EIS	
Bliss Rapids snail (*Taylorconcha serpenticola*)	USFWS ID Threatened	BA and EIS	
Bruneau Hot springsnail *(Pyrgulopsis bruneauensis)*	USFWS ID Endangered; BLM ID Sensitive	BA and EIS	No
Snake River physa snail (*Physa natricina*)	USFWS ID Endangered	BA	
Plants			
Blowout penstemon (*Penstemon haydenii*)	USFWS WY Endangered	BA and EIS	Yes
Colorado butterfly plant (*Gaura neomexicana coloradensis*)	USFWS WY Threatened	BA and EIS	Yes
Desert yellowhead (*Yermo xanthocephalus*)	USFWS WY Threatened	BA and EIS	No
Dwarf raspberry (*Rubus arcticus* ssp. *acaulis)*	USFS WY Sensitive	BE	

Species	Regulatory Status within Project Area	Analysis	Included in Conservation Plan?
Goose Creek milkvetch (*Astragalus anserinus*)	USFWS ID Candidate, BLM ID Sensitive	EIS	No
Laramie columbine (*Aquilegia laramiensis*)	USFS WY Sensitive, BLM WY Sensitive	BE and EIS	
Largeflower triteleia (*Triteleia grandiflora*)	USFS WY Sensitive	BE	
MacFarlane's four-o'clock (*Mirabilis macfarlanei*)	USFWS ID Threatened	BA	
Narrowleaf moonwort (*Botrychium lineare*)	USFS WY Sensitive, BLM WY Sensitive	BE	
Slickspot peppergrass (*Lepidium pappileferum*)	USFWS ID Threatened	BA and EIS	Yes
Spalding's catchfly (*Silene spaldingii*)	USFWS ID Threatened	BA	
Ute ladies'-tresses orchid (*Spiranthes diluvialis*)	USFWS Threatened WY	BA and EIS	Yes
Water howellia (*Howellia aquatilis*)	USFWS ID Threatened	BA	
Western prairie fringed orchid (*Platanthera praeclara*)	USFWS Threatened	BA and EIS	

Notes:
BA = Biological Assessment
BE = Biological Evaluation
BGEPA = Bald and Golden Eagle Protection Act
EIS = Environmental Impact Statement
ID = Idaho
MBTA = Migratory Bird Treaty Act
WY = Wyoming
USFS = U. S. Forest Service
MIS = Management Indicator Species

4.0 DEVELOPMENT OF CONSERVATION PLAN

This section explains how the Companies approached avoidance and minimization of impacts through data collection and careful routing and siting of the proposed facilities.

4.1 Avoidance and Minimization Development and Implementation

This section presents the avoidance of sensitive plant and wildlife resources and minimization of the Project footprint that have been and will be employed, data collection and analysis, and field surveys for the various stages of Project development. The stages of Project development addressed include the proposed route and substation siting process and construction scheduling.

4.1.1 Proposed Route and Substation Siting

Corridor evaluation was conducted in two phases. In the initial phase, the Companies reviewed maps of the area to identify significant constraints and opportunities for selecting corridors between the proposed, planned and existing substations between the planned Windstar Substation near Casper, Wyoming and the proposed Hemingway Substation in Owyhee County, Idaho. Constraints included a wide array of natural resources and man-made features such as the Oregon Trail, sage grouse leks, airports, urban areas, rural residences, agricultural features (center pivot irrigation, feedlots, dairies), visual resource management areas (VRMs), areas of critical environmental concern (ACECs), National Monuments and National Wildlife Refuges (NWR). Opportunities include existing transmission corridors, West-wide Energy (WWE) corridors, pipelines, a USFS utility corridor, and railroads. Using these factors, the Companies selected a proposed general corridor and then conducted a detailed evaluation of constraints to

identify a proposed and alternate corridor between the above-referenced points of interconnection.

Corridors were identified with the goals of maximizing the use of opportunities and minimizing crossings of areas with higher-level constraints. This step took into account corridors defined by existing transmission lines and other linear facilities as well as any additional corridors identified to date by the BLM, the Companies, and the WWE Corridor study. The Companies evaluated each corridor for a variety of environmental and engineering factors to identify the proposed and alternate corridors. This approach included development and use of an attribute matrix, which established the relative importance of each attribute and, as appropriate, analysis tools. Analysis tools included GIS-based routing and weighting, aerial photography, topographic maps, and limited field reconnaissance. The proposed and alternative corridors were then presented at BLM sponsored scoping meetings. Following scoping, BLM Field Offices reviewed proposed and alternative routes to determine which should be carried forward for detailed analysis in the EIS.

Specifically, the Companies acquired geographic information system (GIS) data and qualitative input from the USFWS, BLM, Forest Service, IDFG, and WGFD regarding known and potential locations of special status species and their habitats in the Project area. These data were used to develop the list of special status species of concern in the Project area.

At the request of these agencies, the Companies conducted additional data collection in 2008 to fill certain data gaps in the Project area, including a sage grouse lek survey, a raptor nesting survey, and detailed habitat mapping.

The datasets described above were used during routing of the proposed corridor and substation siting. Certain plant and wildlife resources were identified as constraints to be avoided, including:

- A 0.25-mile “no surface occupancy” buffer of all greater sage-grouse leks, regardless of recent occupancy, was entirely avoided during routing;
- A 0.65-mile buffer of greater sage-grouse leks was avoided unless there was a compelling reason not to (e.g., a non-wildlife resource such as a home to be avoided);
- A 0.50-mile buffer of raptor nests was avoided unless there was a compelling reason not to (e.g., a non-wildlife resource to be avoided); and
- Special management areas established for the protection of plant or wildlife species were avoided, where possible.

Other plant and wildlife resources (such as big game winter range and calving and fawning areas) were not necessarily avoided during routing and siting but were considered a constraint and were taken into consideration during design of the proposed Project. Additionally, proximity of the corridor to urban areas, agricultural areas and rural residences were taken into consideration during the routing and siting.

The proposed and alternative routes are presented in the September 2008 Gateway West Transmission Line Project Siting Study (Idaho Power and Rocky Mountain Power, 2008), and Supplement Siting memo dated October 23, 2008. As site-specific environmental and engineering analyses are conducted along these routes, the proposed transmission line ROW will be refined to further avoid resources or minimize impacts upon them.

4.1.2 Planned ROW Refinement

The Companies conducted a comprehensive Project-wide habitat mapping effort that identified habitats in the Project area and assessed the quality of those habitats for selected special status species. The habitat mapping comprised two field components: aerial photography acquisition and field verification. Based on the results of the habitat mapping, the Companies identified areas within the corridor where species-specific surveys may be necessary to either inform ROW refinement or specify where and when conservation measures apply.

In addition to the avoidance and minimization accomplished through routing, the Companies have developed additional conservation measures, which are presented in Appendix Z of this POD. Some involve seasonal restrictions on construction, discussed in general in Section 4.1.3 and detailed by species in Section 5. Many of the measures require preconstruction surveys to determine if and when they apply.

4.1.3 Construction Scheduling and Monitoring

Avoidance can be spatial and/or temporal. Where disturbance during construction is of concern, construction is proposed to be limited to periods of species' absence or reduced presence. In addition to limited operating seasons, which categorically restrict construction, environmental monitoring is also proposed where construction may be permitted, but its conformance with minimization measures would be monitored and enforced.

The details of the Companies' environmental compliance program, including roles and responsibilities, pre-construction surveys, monitoring, and reporting, are detailed in Appendix C– Framework Environmental Compliance Management Plan.

4.2 Development of Conservation Measures

After taking into consideration wildlife and plant resources, as well as other important resources during siting and routing, the Companies recognized the need for additional measures to minimize the impact from construction of the Project. The Companies used the following steps to develop the measures found in Section 5:

- Identified and reviewed the BLM and USFS LMPs applicable to the Project area (Table 4-1)
- For each LMP, recorded the surface-use stipulations specific to each species of concern
- Identified inconsistencies in requirements among jurisdictions
- Determined exception or waiver criteria if applicable
- Used FWS avoidance recommendations when applicable
- Incorporated IDFG and WGFD species-specific management recommendations
- Evaluated the stipulations on a resource-by-resource basis and developed the proposed Project-wide temporal and spatial restrictions and exception criteria

4.2.1 Land-Management Plans

Wyoming land management plans within the Project area are recent, and overall, the specific temporal and spatial restrictions for a given species are consistent across these jurisdictions (Table 4-1). Most of the relevant Idaho plans within the Project area are outdated, and additional information provided by the agencies in Idaho is very limited. In addition, these plans tend to have information gaps, contain restrictions that are not consistent across jurisdictions, and

contain stipulation language that is not specific and require interpretation. RMPs from both states have phrases such as “avoidance where possible”, “request”, “recommend” “review on a case by case basis”, and “exceptions may be made” indicating many of the stipulations and restrictions need to be reviewed on a species by species basis within each field office.

Table 4-1. Land-Management Plans for the Project

Segment/Alternative	Administrative Unit	Applicable Plan Name	Plan Year
Wyoming			
1W(a), 1W(c)	Casper BLM Field Office	Casper RMP	2007
1W(a), 1W(c)	Medicine Bow-Routt National Forests	Medicine Bow National Forest Revised Forest Plan	2003
1W(a), 1W(c), 2,	Rawlins BLM Field Office	Rawlins RMP	2009
3, 4	Rock Springs BLM Field Office	Green River RMP	1997
4,	Kemmerer BLM Field Office	Kemmerer RMP	2010
Idaho			
4, 5, 7,	Pocatello Field Office	Pocatello RMP	2012
5, 7	Pocatello Field Office	Malad MFP	1981
4	Caribou-Targhee National Forest	Revised Forest Plan for the Caribou National Forest	2003
6, 8, 10	Shoshone Field Office	Monument RMP	1986
8	Shoshone Field Office	Bennett Hills/Timmerman Hills MFP	1980
5	Burley Field Office	Monument RMP	1985
5, 6, 7, 9, 10	Burley Field Office	Cassia RMP	1985
9, 10	Burley Field Office	Twin Falls MFP	1982
9	Jarbidge Field Office	Jarbidge RMP	1987
8	Four Rivers Field Office	Jarbidge RMP	1987
8	Four Rivers Field Office	Kuna MFP	1983
8	Four Rivers Field Office	Morley Nelson Snake River Birds of Prey National Conservation Area RMP	2008
9	Bruneau Field Office	Bruneau MFP	1983
8	Owyhee Field Office	Owyhee RMP	1999

4.2.2 EPM Selection

Many of the EPMs are designed to assume species presence and, in the case of seasonal restrictions, to broadly bracket the interval of time in which there could be adverse impacts. The Companies have proposed a process (Appendix C) to allow for flexibility on a case-by-case basis based on species’ occupancy and other local conditions.

Finally, the Companies did not include all measures found in all LMPs. Measures not included are those which are not specific enough to define a measurable stipulation, measures that describe general goals for the federal lands but do not address new projects specifically, measures that address habitat management and treatment versus discrete temporal and spatial restrictions on project activities, cases in which the expectations of one LMP extend well beyond that of the other plans, and measures not practical from a project design and development perspective.

4.2.3 Applicability

The Companies plan to apply the plant and wildlife conservation EPMs as follows:

- The Wyoming segments of the proposed Project cross a relatively large percentage of Federal land, and private lands tend to be unsigned and isolated sections of land in a checkerboard pattern. In Idaho, the proposed Project for Segments 6, 8, and 9 is largely on Federal land, with private and state land interspersed. Therefore, in Wyoming and Idaho Segments 6, 8, and 9, the EPMs will be applied to the entire segment (i.e., including the private and state land) except as follows:
    - Proposed substation and regeneration sites located on private land unless they are standard EPMs of the Companies;
    - EPMs that are only applicable to a specific BLM Field Office;
    - EPMs that are only applicable to National Forest System lands; and
    - Different practices will be followed on private property that are at the request of the property owner and don't violate the law.
- In Idaho, Segments 4, 5, 7, and 10 are predominantly private ownership in agriculture and other development, and for the most part, the Federal land in these segments is clustered. In these segments, plant and wildlife EPMs will be applied based on ownership as identified in the Table Z-1 of Appendix Z except as follows:
    - Proposed substation and regeneration sites located on private land unless they are standard EPMs of the Companies; and
    - Different practices will be followed on private property that are at the request of the property owner and don't violate the law.

5.0 PROPOSED PLANT AND WILDLIFE CONSERVATION PLAN

The conservation measures that the Companies will implement to avoid or minimize impacts to special status species in the Project area are presented in Appendix Z of the POD. These measures will only be applied where applicable and where special status species have been identified by the Companies and the Agencies as occurring in the Project area

Pre-construction surveys would be conducted for TES wildlife species within suitable habitats during the appropriate seasonal timeframe, in order to determine activity levels prior to construction, as well as facilitate micro-siting of the Project outside of occupied areas when applicable and to the extent practical. The following survey protocols have been identified for use, as and where applicable, during these pre-construction surveys:

- Black-footed ferret non-block-cleared areas would be surveyed using the protocols found in the "Black-Footed Ferret Survey Guidelines for Compliance with the Endangered Species Act" (USFWS 1989).
- Burrowing owl pre-construction surveys would be conducted using the protocols found in the "Recommended Survey Protocol and Recommended Actions to Protect Burrowing Owls when Conducting Prairie Dog Control" (CDOW 2007).

- Mountain Plover pre-construction surveys would be conducted using the protocols found in the "Birds of Conservation Concern 2002. Division of Migratory Bird Management" (USFWS 2002).
- Pygmy rabbit pre-construction surveys would be conducted within 300 feet of and including the Project's ROW using the protocols found in the "Surveying for Pygmy Rabbits (Brachylagus idahoensis)" (Ulmshneider, 2004). The 300-foot distance beyond where most other pre-construction surveys would be conducted was chosen because burrow systems have been found to extend approximately 300 feet (Bradfield 1974).
- Wyoming pocket gopher pre-construction surveys would be conducted using the protocols found in the "Wyoming Pocket Gopher (Thomomys clusius): A Technical Conservation Assessment" (Keinath and Beauvias 2006).
- Flammulated owl and northern goshawk pre-construction surveys would be conducted using the protocols found in the "Rocky Mountain Region, Species Conservation Program: Species Conservation Assessments" (USFS 2008), and using the Payette National Forest Region 4 Sensitive Species Broadcast Vocalization Compact Disk (USFS 1993).

IPC and Rocky Mountain Power will work with the BLM and USFWS to identify any additional protocols that would need to be used during pre-construction surveys for TES species.

6.0 LITERATURE CITED

IPC (Idaho Power Company) and Rocky Mountain Power. 2009. Revised Siting Study. Gateway West Transmission Line Project. December. Available online at: http://www.wy.blm.gov/nepa/cfodocs/gateway_west/documents/siting/2009_1230_Revised_Siting_Study.pdf

APPENDIX I
FRAMEWORK STREAM, WETLAND, WELL, AND SPRING PROTECTION PLAN

Appendix I

Framework Stream, Wetland, Well, and Spring Protection Plan

Gateway West Transmission Line Project

Prepared by:

PacifiCorp
1407 W. North Temple
Salt Lake City, UT 84116

and

Idaho Power Company
1221 West Idaho Street
Boise, ID 83702

January 2013

TABLE OF CONTENTS

1.0 INTRODUCTION I-1

2.0 PURPOSE I-1

3.0 REGULATORY OVERVIEW I-1

3.1 CWA - Section 303(d) List of Impaired Waters I-2
3.2 CWA - Section 130.7 Total Maximum Daily Load I-2
3.3 CWA - Section 401 Water Quality Certification I-3
3.4 CWA - Section 402 NPDES Permits I-3
3.5 CWA - Section 404 Waters of the U.S. Permits I-4
3.6 Rivers and Harbors Act of 1899, Sections 9 and 10 ..... I-5
3.7 Other Federal Permits and Programs I-6
3.8 Idaho Permit I-6

4.0 OVERVIEW OF STREAMS, WETLANDS, WELLS, AND SPRINGS I-6

4.1 Streams and Drainages I-6
4.2 Wetlands I-6
4.3 Wells and Springs I-7

5.0 MITIGATION MEASURES DURING CONSTRUCTION AND OPERATION I-7

5.1 Specific Stipulations and Methods for Streams and Wetlands I-7
5.2 Stream Crossing Methods I-7
5.3 Wetland Crossing Methods I-8
5.4 Spill Prevention I-9
5.5 Erosion and Sedimentation I-9
5.6 Soil Storage near Streams I-9
5.7 Stream Obstruction and Flash Flood Hazard I-9
5.8 Protection of Wells and Springs I-9

6.0 LITERATURE CITED I-10

1.0 INTRODUCTION

Rocky Mountain Power and Idaho Power Company (Companies) are proposing to construct and operate approximately 990 miles of new 230-kilovolt (kV), 345-kV and 500-kV alternating current electric transmission system, called the Gateway West Transmission Line Project (Project), consisting of 10 segments between the Windstar Substation at Glenrock, Wyoming, and the Hemingway Substation approximately 30 miles southwest of Boise, Idaho. The proposed transmission line is needed to supplement existing transmission lines in order to relieve operating limitations, increase capacity, and improve reliability in the existing electric transmission grid, allowing for the delivery of up to 1,500 megawatts (MW) of additional energy for the Companies' larger service areas and to other interconnected systems. The Project includes ground-disturbing activities associated with the construction of above-ground, single-circuit transmission lines involving structures, access roads, multi-purpose yards, fly yards, and pulling sites as well as associated substations, communication sites, and electrical supply distribution lines. The Project crosses private land and public lands administered by the Bureau of Land Management (BLM), U.S. Forest Service (Forest Service), other federal agencies, and the states of Idaho and Wyoming.

2.0 PURPOSE

The purpose of this Stream, Wetland, Well, and Spring Protection Plan is to provide measures to protect these resources from potential impacts during construction, operation, and maintenance activities. This plan references and incorporates by reference those mitigation measures made part of the project description by the Companies and found in Appendix Z of this POD. The final plan will incorporate all mitigation measures, including those imposed by permitting agencies in addition to the project description.

This plan is intended for use as a guide to determine the appropriate site-specific measures to be implemented during construction activities. The goals of this plan are to:

- Control Project-related erosion and sedimentation into streams and wetlands and minimize disturbance and erosion of streambeds and banks.
- Protect springs and wells in the Project area from impacts due to blasting and hazardous materials contamination.

This document provides a template for the detailed Final Stream, Wetland, Well, and Spring Protection Plan to be developed by the Construction Contractor and approved by the BLM and other permitting agencies prior to construction.

3.0 REGULATORY OVERVIEW

Construction, operation, and maintenance of the Project include ground disturbing activities that could impact aquatic resources. The following regulations and associated permits and authorizations would be required for the Project.

The CWA (33 USC Section 1251 et seq., formerly the Federal Water Pollution Control Act of 1972), was enacted with the intent of restoring and maintaining the chemical, physical, and biological integrity of the waters of the United States. The CWA requires states to set standards to protect, maintain, and restore water quality through the regulation of point source and certain non-point source discharges to surface water. The CWA also requires the USACE to administer permits for dredge or fill in waters of the U.S. Specific sections of the CWA that apply to the Project are described below, followed by a brief description of other aquatic resource permits required for the Project.

3.1 CWA - Section 303(d) List of Impaired Waters

Section 303(d) of the CWA establishes requirements for states and tribes to identify and prioritize water bodies that do not meet water quality standards through current technology-based regulations and controls. A water quality standard defines the designated beneficial uses of a water segment and the water quality criteria necessary to support those uses. Currently, both Idaho Department of Environmental Quality (IDEQ) and Wyoming Department of Environmental Quality (WDEQ) are required to conduct a comprehensive analysis of their respective state's water bodies every two years to determine if they meet water quality standards and develop a list of impaired or threatened waters that require Total Maximum Daily Load (TMDLs). The Project would need to implement measures to avoid and / or reduce the potential that it would contribute to the listing of a water body as impaired or be inconsistent with an adopted TMDL.

3.2 CWA - Section 130.7 Total Maximum Daily Load

Section 130.7 of the CWA requires states to establish TMDL programs, which are approved by the USEPA for streams and lakes that do not meet adopted water quality standards. A TMDL includes a quantitative assessment of water quality problems, contributing sources, and load reductions or control actions needed to restore and protect water bodies. A TMDL budget takes into account loads from point, nonpoint, and natural background sources. National Pollutant Discharge Elimination System (NPDES) permits address point-source pollution to surface waters. Non-point source pollution is addressed by the application of Best Management Practices (BMPs) and mitigation measures found in Appendix Z of this POD.

In compliance with the federal CWA, the IDEQ and the WDEQ have identified Section 303(d) water quality limited streams and lakes for development of TMDL criteria. TMDLs have been established for surface waters in Idaho. WDEQ has developed few TMDLS at this time as they are just beginning to implement the TMDL program; they are currently working on eight TMDLs. WDEQ projects that from the time of listing a waterbody as impaired, a TMDL for that waterbody would be developed within 1-5 years.

Stream segments within the Project Area that have been identified on 303(d) lists as impaired due to either sedimentation (sediment-impaired streams) or high temperatures (temperature-impaired streams), were listed in Table D.16-13 of the Draft Environmental Impact Statement (Draft EIS) for the Project (BLM 2011) and will be found in a similar table for the Final EIS when published.

3.3 CWA - Section 401 Water Quality Certification

Pursuant to Section 401 of the federal CWA, any permit or license issued by a federal agency for an activity that may result in a discharge into waters of the U.S. requires certification from the state in which the discharge originates. This requirement allows each state to have input into federally approved projects that may affect its waters (rivers, streams, lakes, and wetlands) and to ensure the projects would comply with state water quality standards and any other water quality requirements of state law. State certification ensures that the project would not adversely impact impaired waters (waters that do not meet water quality standards) and that the project complies with applicable water quality improvement plans (TMDLs). The States must grant, deny, or waive Section 401 certification for a project before a federal permit or license can be issued.

The Departments of Environmental Quality for both Idaho and Wyoming must provide Section 401 Water Quality Certifications for the federally issued permits, including the 404 permits in both states and 402 permits issued in Wyoming. The USEPA has 402 jurisdiction in Idaho.

3.4 CWA - Section 402 NPDES Permits

The NPDES program requires facilities discharging from a point source into waters of the U.S. to obtain discharge permits. A point source is a conveyance such as a pipe, storm drain or other point. USEPA is responsible for permitting and enforcing all NPDES permits in Idaho. NPDES permits are administered by the WDEQ in Wyoming. Most storm water discharges are considered point sources and require coverage by a NPDES permit. The Project will need to obtain coverage under existing construction storm water programs in Idaho and Wyoming.

The NPDES Stormwater Program requires operators of construction sites that disturb one acre or more to obtain authorization to discharge stormwater under an NPDES construction stormwater permit. In Idaho and Wyoming, the EPA and WDEQ, respectively, have issued Construction General Permits (CGP). In order to be covered under the CGP, a site-specific Storm Water Pollution Prevention Plan (SWPPP) must be developed. The operator files a Notice of Intent which indicates the operator would comply with the CGP. The site operator must document the erosion, sediment, and pollution controls that would be used during construction and operation, inspect the controls periodically, and maintain the controls throughout the life of the project. If a TMDL has been established for the water body where a project would discharge, and the TMDL indicates that it applies to construction or stormwater discharges, then the SWPPP must be consistent with the requirements of that TMDL.

If hazardous materials, including fuels and lubricants, are used or stored in quantities exceeding certain quantities, a Spill Prevention, Control and Countermeasure (SPCC) Plan is required. Section 311(j)(1)(c) of the CWA contains the regulations preventing discharge of oil to surface water. The SWPPP also contains measures regarding the handling and storage of such materials. The Framework SWPPP and SPCC Plans are found in Appendix G of this POD.

3.5 CWA - Section 404 Waters of the U.S. Permits

Section 404 of the CWA authorizes the USACE to regulate the discharge of dredged or fill material to the waters of the United States. Discharges are authorized through issuance of nationwide permits or individual permits for specific activities.

The USACE jurisdiction over non-tidal waters of the United States extends to the "ordinary high water mark provided the jurisdiction is not extended by the presence of wetlands" (33 CFR § 328.4); and under Title 40 CFR § 230.3 (s)(1). Waters of the United States are defined as:

> *"All waters which are currently used, or were used in the past, or may be susceptible to use in interstate or foreign commerce, including all waters which are subject to the ebb and flow of the tide, all interstate waters including interstate wetlands, all other waters such as intrastate lakes, rivers, streams (including intermittent streams), mudflats, sandflats, wetlands, sloughs, prairie potholes, wet meadows, playa lakes, or natural ponds, the use, degradation or destruction of which would affect interstate or foreign commerce, including such waters which are or could be used by interstate or foreign travelers for recreational or other purposes, or from which fish or shellfish are or could be taken and sold in interstate or foreign commerce, or which are used or could be used for industrial purposes by industries in interstate commerce; all impoundment of waters otherwise defined as waters of the United States interstate commerce, tributaries of waters identified in paragraphs 1-4 of this section, the territorial seas; and wetlands adjacent to waters."*

Many wetlands are protected under the CWA as waters of the U.S. and special aquatic sites. Wetlands are defined by the USACE based on the presence of wetland vegetation, wetland hydrology, and hydric soils. In addition, Executive Order 11990, Protection of Wetlands (42 Federal Register 26961), directs all federal agencies to minimize the destruction, loss, or degradation of wetlands, and to enhance the natural and beneficial values of wetlands. Federal regulation and management of wetlands follows a "no net loss" policy. Under Section 404, the USACE issues a number of nationwide permits for different types of activities that result in minimal individual and cumulative adverse effects on the aquatic environment and individual permits for larger and more complex impacts.

Nationwide permits. A nationwide permit is a general permit that authorizes a category of activities throughout the nation by streamlining the approval process for certain types of activities that have minimal impacts to aquatic resources. These permits are valid only if the conditions applicable to the permit are met. If the conditions cannot be met, a regional or individual permit would be required. Section 404 Nationwide Permit 12 (77 *Federal Register* 10271-10272 February 2012) covers construction, maintenance, and repair of utility lines in all waters of the U.S. provided that there is no change in pre-construction contours. This nationwide permit also covers related facilities including substations, structure foundations, and roads; provided that these activities do not result in the loss of greater than 0.5 acre of waters of the U.S. Nationwide Permit 12 also authorizes temporary structures, fill, and work necessary to conduct utility line activities as long as (1) appropriate measures are taken to maintain normal downstream flows and minimize flooding, (2) structures and fill consist of materials that would not be eroded by high flows, and (3) structures and fill are removed

in their entirety and the affected areas are returned to pre-construction elevations and re-vegetated as appropriate upon project completion. Impact limitations for Nationwide Permit 12 cover all disturbances at a single crossing of a wetland or stream, or multiple crossings of the same wetland or stream.

Any permanent impacts over 0.1 acres to waters of the U.S. require full mitigation, regardless of permit type. Permanent loss of more than 0.5 acres of a water of the U.S. requires an individual (General) permit rather than coverage under a Nationwide Permit.

Nationwide Permits contain general conditions that address potential impacts to the environment that could result from dredge or fill of waters of the U.S., such as adverse effects to soils, migration and spawning habitats, endangered species, or historic properties. Supplemental documentation may be required as part of a pre-construction notification package (e.g. plant and wildlife survey reports, cultural resource survey reports) to support compliance with the general conditions of the Nationwide Permit. Compliance with the National Historic Preservation Act and the Endangered Species Act is being addressed in the Environmental Impact Statement currently being prepared for this Project.

Individual Permits. Individual Permits are issued following a full public notice interest review of an individual application for a Department of Army permit. A public notice is distributed to all known interested persons. After evaluating all comments and information received, a final decision on the application is made. The final decision is made on a case-by-case evaluation and is generally based on the outcome of the public notice process and a determination of project benefits versus detriments (losses).

3.6 Rivers and Harbors Act of 1899, Sections 9 and 10

Section 9 of the Rivers and Harbors Appropriation Act of 1899 (33 U.S.C. 403; Chapter 425, March 3, 1899; 30 Stat. 1151) (Act) prohibits the construction of any bridge, dam, dike or causeway over or in navigable waterways of the U.S. without Congressional approval. Administration of section 9 has been delegated to the Coast Guard. Structures authorized by State legislatures may be built if the affected navigable waters are totally within one State, provided that the plan is approved by the Chief of Engineers and the Secretary of Army (33 U.S.C. 401).

Under section 10 of the Act, the building of any wharfs, piers, jetties, and other structures is prohibited without Congressional approval, and excavation or fill within navigable waters requires the approval of the Chief of Engineers. Authority of the USACE to issue permits for the discharge of refuse matter into or affecting navigable waters under section 13 of the 1899 Act (33 U.S.C. 407; 30 Stat. 1152) was modified by title IV of P.L. 92-500, October 18, 1972, the Federal Water Pollution Control Act Amendments of 1972 (33 U.S.C. 1341-1345; 86 Stat. 877), as amended, which established the National Pollutant Discharge Elimination System Permits.

The Fish and Wildlife Coordination Act (16 U.S.C. 661-667e; 48 Stat. 401), as amended, provides authority for the U.S. Fish and Wildlife Service (USFWS) to review and comment on the effects on fish and wildlife of activities proposed to be undertaken or permitted by the USACE. USFWS concerns include contaminated sediments associated with dredge or fill projects in navigable waters.

3.7 Other Federal Permits and Programs

Executive Order 11988 requires federal agencies to avoid to the extent possible the long- and short-term adverse impacts associated with the occupancy and modification of floodplains and to avoid direct and indirect support of floodplain development wherever there is a practicable alternative. In accomplishing this objective, "each agency shall provide leadership and shall take action to reduce the risk of flood loss, to minimize the impact of floods on human safety, health, and welfare, and to restore and preserve the natural and beneficial values served by flood plains in carrying out its responsibilities."

3.8 Idaho Permit

An Idaho State Stream Alteration Permit must be obtained prior to altering any stream as defined by Idaho Administrative Code (37.03.07) which includes "… to obstruct, diminish, destroy, alter, modify, or change the natural existing shape of the channel or to change the direction of flow of water of any stream channel within or below the mean high water mark."

4.0 OVERVIEW OF STREAMS, WETLANDS, WELLS, AND SPRINGS

4.1 Streams and Drainages

A review of the National Wetland Inventory and field surveys conducted in 2009 through 2013 identified and will identify perennial, intermittent, and ephemeral streams and drainages that are either crossed by the Project centerline or by access roads or ancillary facilities. In addition, ephemeral streams, drainages, and irrigation ditches are crossed by the Project right-of-way, access roads, substations, and temporary work areas. Jurisdictional waters of the United States crossed by the Project are being delineated during pre-construction stream and wetland surveys and will be presented to the USACE for a jurisdictional determination.

4.2 Wetlands

Wetlands are defined for regulatory purposes as "those areas that are inundated or saturated by surface or groundwater at a frequency and duration sufficient to support, and that under normal circumstances do support, a prevalence of vegetation typically adapted for life in saturated soil conditions" (33 CFR Part 328.3, 40 CFR Part 230.3). Wetlands are important ecological resources that perform many functions including groundwater recharge, flood flow attenuation and conveyance, erosion control, and water quality improvement. They also provide habitat for many plants and animals, including threatened or endangered species.

The initial wetland assessment was conducted during the development of the Draft Environmental Impact Statement (EIS). Wetland delineations that follow the USACE Wetland Delineation Manual (1987) and Arid West Regional Supplement (2008) will be conducted prior to construction. The USACE Wetland Delineation Manual provides technical guidelines and methods for a three-parameter approach to determine the location and boundaries of potentially jurisdictional wetlands. This approach requires

that an area support positive indicators of hydrophytic vegetation, hydric soils, and wetland hydrology to be considered a wetland. Surveyors gathered wetland determination information on data forms in the field and mapped wetland boundaries using GPS technology. Wetlands that meet all three parameters will be presented to the USACE for a jurisdictional determination.

4.3 Wells and Springs

Wells and springs in known blasting zones will be identified prior to construction by the Construction Contractor.

5.0 MITIGATION MEASURES DURING CONSTRUCTION AND OPERATION

The Companies and the Construction Contractor will adhere to the mitigation measures and other specific stipulations and methods discussed in the following sections and Appendix Z of the POD to minimize project impacts to jurisdictional waters of the United States, including wetlands, and wells and springs where they occur along the Project ROW, access roads, substations, and temporary work areas. Other specific stipulations and methods presented in Appendix D – Framework Reclamation Plan are designed to minimize the potential impacts to other non-jurisdictional drainages and dry swales found along the Project route.

However, it is expected the Construction Contractor will work cooperatively with the Compliance Inspection Contractor (CIC) and, as appropriate, USACE staff throughout construction to determine the most appropriate site-specific measures to be implemented based on a number of factors, including site characteristics, construction techniques to be used, anticipated weather conditions, mandatory permit requirements, and other variables.

5.1 Specific Stipulations and Methods for Streams and Wetlands

Specific measures will be followed as standard practices to protect and minimize impacts to streams and wetlands in the Project area. These measures are listed in Appendix Z of the POD.

5.2 Stream Crossing Methods

The transmission line centerline crosses streams and wetlands that will not be permanently impacted by the project because only the conductors will cross these water features. The process of stringing the conductors may bring the wires briefly into contact with the vegetation but there will be no damage to the vegetation. Where the line must cross forested riparian or wetland areas where the vegetation is now of a height to touch the conductors once strung and tensioned, or could grow into the conductors and create a safety hazard, the taller vegetation will be cut prior to construction.

Operations and maintenance efforts will maintain the vegetation under the conductors at or below a height that prevents interaction with the conductors. See Appendix B of this POD, section 4.1.5, for a full description of vegetation management under conductors

throughout the Project. This ROW preparation and maintenance was taken into consideration when estimating total impact to wetland and riparian areas in the Final EIS (see Sections 3.9, Wetlands, and 3.16, Water Resources, of the Draft EIS (BLM 2011)).

With only a few exceptions, permanent, above-grade roads are needed to each structure and to each substation and regeneration station as part of the Project design. Where feasible, roads have been selected (if existing) or designed (if proposed) to avoid water and wetland crossings. Where such a crossing is not avoidable, several water or wetland crossing methods have been selected to minimize impact to waterbodies while allowing for safe and permanent access to each structure. Those methods, including avoidance of permanent roads in the important wetland area of the Bear River Plain near Cokeville, WY and Montpelier, ID, are detailed in Section 2.5 of Appendix B of this POD.

Streams that the Project will impact will be identified in the Construction POD and Construction Operation and Maintenance Plan, submitted to the BLM, Forest Service, and other agencies as part of a request for a Notice to Proceed for a particular segment or work element. If a stream or wetland cannot be avoided during construction, the CIC and Construction Contractor will work together to identify the appropriate crossing strategy for vehicular access. The various types of crossing methods are discussed in detail in Appendix B of this POD, Section 2.5.

When implemented, these crossing methods will help protect water quality by minimizing stream channel disturbance, erosion, and sedimentation due to Project activities. If the chosen crossing method is not adequately preventing and/or minimizing sedimentation and erosion, the CIC may require additional sediment controls when circumstances warrant. Streams crossed by the Project will be monitored by the CIC throughout construction for signs of bed and/or bank degradation. If disturbance resulting from installation of erosion control devices across shallow swales outweighs the benefits of having the devices in place, then the CIC, in consultation with the Construction Contractor, will have the option of not prescribing any temporary stream crossing or erosion control method. See Appendix C of this POD (Framework Environmental Compliance Management Plan).

Flow of sediment into the stream will be prevented by installing waterbars on the travel route at or near the top of bank (or other slope break) to redirect road runoff away from the stream. If necessary, downslope protection will be increased by extending silt fence from the down-gradient end of the waterbar.

In cases where it is impractical and highly disruptive to the environment to construct temporary crossings, such as over very large watercourses or deep canyons, vehicles will not attempt to cross the watercourse. The conductor will be strung across these resources by hand or other method and construction equipment will be routed around.

5.3 Wetland Crossing Methods

See Appendix B of this POD, Section 2.5.4, for a description of wetland crossing methods to be used for this project. Appendix B also specifies where permanent roads

will not be constructed in wetlands (Bear River Plain). See Section 6 for further details, below.

If a wetland will be avoided, but a travel route will be bladed within 20 feet of the wetland edge, silt fence will be installed along the travel route on the wetland side unless the wetland is upgradient.

If removed during construction, wetland soil will be temporarily stored either within the wetland or in upland areas close to the wetland boundaries and will be used to restore the site to pre-construction contours. Silt fence will be installed around tower sites where necessary to minimize the potential for sediment discharge from excavated spoil into adjacent, undisturbed wetlands.

5.4 Spill Prevention

To prevent potential spills or discharges from entering and impacting streams and wetlands, the measures listed in Appendix Z of the POD will be implemented:

5.5 Erosion and Sedimentation

To limit erosion and sedimentation from affecting streams and wetlands, the measures listed in Appendix Z of the POD will be implemented. In addition, please see Appendix G for framework SWPPP and SPCC Plans.

5.6 Soil Storage near Streams

Any soil or other organic debris piled by bulldozers and grading equipment near the stream banks during construction will be stored a minimum of 100 feet from the banks and appropriately re-spread and stabilized to prevent sedimentation during rainfall events. The Construction Contractor will also adhere to any additional soil storage measures as required by applicable Project permits.

5.7 Stream Obstruction and Flash Flood Hazard

The placement of transmission towers within the channel of a stream, drainage, or flash flood area will be avoided to the extent possible. If placement within these areas is unavoidable, the towers will be engineered to withstand the force of flood flows and will be constructed according to all applicable permits. Where placement of a transmission tower or road is unavoidable within a stream channel, permanent diversion structures, or culverts sufficient to carry the stream's normal conveyance capacity at the site, or armoring for the pole foundations will be constructed.

5.8 Protection of Wells and Springs

All applicable laws and regulations will be followed in respect to the protection for drinking water sources. Wells and springs in known blasting zones will be identified prior to construction by the Construction Contractor.

Refer to Appendix G – Framework Spill Prevention, Containment, and Countermeasure Plan; Appendix M – Framework Blasting Plan; and Appendix P – Framework Hazardous Materials Management Plan for additional measures pertaining to the protection of wells and springs.

6.0 LITERATURE CITED

BLM (Bureau of Land Management). 2011. Draft Environmental Impact Statement for the Gateway West Transmission Line Project.

USACE (U.S. Army Corps of Engineers). 2008. Regional Supplement to the Corps of Engineers Wetland Delineation Manual: Arid West Region. Version 2.0.

_____. 1987. Corps of Engineers Wetland Delineation Manual On-line Edition: Wetlands Research Program Technical Report Y-87-1. Vicksburg, MS: U.S. Army Corps of Engineer Waterways Experiment Station.

APPENDIX J
FRAMEWORK PALEONTOLOGICAL RESOURCES PROTECTION PLAN

Appendix J

Framework Paleontological Resources Protection Plan

Gateway West Transmission Line Project

Prepared by:

PacifiCorp
1407 W. North Temple
Salt Lake City, UT 84116

and

Idaho Power Company
1221 West Idaho Street
Boise, ID 83702

January 2013

TABLE OF CONTENTS

1.0 INTRODUCTION J-1
2.0 REGULATORY FRAMEWORK J-2
2.1 National Environmental Policy Act of 1969 (P.L. 91-190, 83 Stat. 852, 42 USC 4321-4327) J-2
2.2 Federal Land Policy and Management Act of 1976 (P.L. 94-579) J-2
2.3 Paleontological Resources Preservation, Omnibus Public Lands Act, Public Law 111-011, Title VI, Subtitle D 16 USC (OPLA-PRP 2009) J-2
3.0 PALEONTOLOGICAL POTENTIAL J-2
3.1 Determination of Paleontological Potential J-2
3.2 Potential Fossil Yield Classification and Condition Classification J-5
4.0 PALEONTOLOGICAL STIPULATIONS AND METHODS J-6
4.1 Stipulations and Methods J-6
4.2 Construction Personnel Procedures J-7
4.3 Collection/Replication of Fossil Trackways J-7
4.4 Curation Plan J-7
5.0 LITERATURE CITED J-9

LIST OF ATTACHMENTS

Attachment A Bedrock and Fossil Potential Summary

1.0 INTRODUCTION

Rocky Mountain Power and Idaho Power Company (Companies) are proposing to construct and operate approximately 1,000 miles of new 230-kilovolt (kV), 345-kV and 500-kV alternating current electric transmission system, called the Gateway West Transmission Line Project (Project), consisting of 10 segments between the Windstar Substation at Glenrock, Wyoming, and the Hemingway Substation approximately 30 miles southwest of Boise, Idaho. The proposed transmission line is needed to supplement existing transmission lines in order to relieve operating limitations, increase capacity, and improve reliability in the existing electric transmission grid, allowing for the delivery of up to 1,500 megawatts of additional energy for the Companies' larger service areas and to other interconnected systems. The Project includes ground-disturbing activities associated with the construction of above-ground, single-circuit transmission lines involving towers, access roads, multiuse areas, fly yards, and pulling sites as well as associated substations, communication sites, and electrical supply distribution lines. The Project crosses private land and public lands administered by the Bureau of Land Management (BLM), U.S. Forest Service (Forest Service), and the states of Idaho and Wyoming.

Paleontological resources (i.e., fossils) are the remains or traces of ancient life (DOI 2000). Fossil remains may include bones, teeth, shells, leaves, and wood found in geological deposits within which they were originally buried (DOI 2000). Paleontological resources include not only the actual fossils, but also the collecting localities and the geological deposits that contain the fossils (DOI 2000).

The purpose of the framework Paleontological Resources Protection Plan (PRPP) is to assist the BLM in planning and design efforts for the proposed Project as it relates to paleontological resource issues. The framework PRPP identifies the mitigation measures needed to avoid or reduce project-related impacts to paleontological resources, wherever feasible. This plan provides important background and contextual information useful for the paleontological resources mitigation program. The logistics, procedures, and methods outlined in this framework PRPP ensure compliance with federal and state regulations (BLM 1998, 2008, 2009).

The framework PRPP is a work plan for all of the paleontological-related activities that may ensue during the course of development of the Project. It is not the intent of the PRPP to present a comprehensive list of sites with discussions of all significant taxa found from the vicinity of the Project area. The PRPP offers a research-oriented framework and accompanying logistical guidelines to ensure significant non-renewable paleontological resources unearthed by development of the Project will be managed appropriately and in a timely manner, thereby effectively mitigating adverse impacts to these fossil resources.

As part of the environmental impact statement (EIS) process, a review was conducted of relevant published geological and paleontological reports, unpublished geological and paleontological reports, and museum paleontological site records. This approach was followed in recognition of the direct relationship that exists between paleontological resources and the geological units within which fossils are entombed. By knowing the

geology of a particular area and the fossil productivity of geological units that occur in the area, it is possible to predict where fossils will likely be found.

The proposed Project crosses bedrock units of varying fossil potential. Environmental protection measures (EPMs) to protect fossil resources are presented in Appendix Z of the Plan of Development (POD).

2.0 REGULATORY FRAMEWORK

The following provides a brief overview of federal and state legislation, regulatory compliance, and professional standards applicable to paleontological resources in the Project area considered in the development of this Plan.

2.1 National Environmental Policy Act of 1969 (P.L. 91-190, 83 Stat. 852, 42 USC 4321-4327)

The National Environmental Policy Act of 1969 (NEPA) mandates policies to “preserve important historic, cultural, and natural aspects of our national heritage.” NEPA further provides for reports regarding the environmental impacts of federal actions on public lands.

2.2 Federal Land Policy and Management Act of 1976 (P.L. 94-579)

The Federal Land Policy and Management Act of 1976 (FLPMA) was enacted “to establish public land policy; to establish guidelines for its administration; to provide for the management, protection, development, and enhancement of the public lands; and for other purposes,” and requires that important historic, cultural, and natural aspects of our natural history be preserved. As such, paleontological resources on federal lands have been determined to be property of the United States and must be protected under FLPMA.

2.3 Paleontological Resources Preservation, Omnibus Public Lands Act, Public Law 111-011, Title VI, Subtitle D 16 USC (OPLA-PRP 2009)

The purpose of the Paleontological Resources Preservation Act of 2009 is to “manage and protect paleontological resources on federal land using scientific principles and expertise.” It directs the DOI and the Forest Service to “develop appropriate plans for inventory, monitoring, and the scientific and educational use of paleontological resources, in accordance with applicable agency laws, regulations, and policies.”

3.0 PALEONTOLOGICAL POTENTIAL

3.1 Determination of Paleontological Potential

The Potential Fossil Yield Classification (PFYC) system is a measure of the likelihood of impacting fossil resources in a given area based on the occurrence of fossil-bearing geological units. This system predicts the probability of finding paleontological resources in a given area using geological maps of sufficient scale and detail. The numerical nature of the PFYC system also allows for ease of importation into a

geographic information system, further facilitating the planning and management decision-making process. The five-part PFYC system, as defined by the BLM (2008), is explained below:

Class 1 – Very low potential: Geological units not likely to contain recognizable fossil remains such as:

- Units that are igneous or metamorphic, excluding reworked volcanic-ash units
- Units that are Precambrian in age

The probability for impacting any fossils is negligible. Assessment or mitigation of paleontological resources is usually unnecessary. The occurrence of significant fossils is nonexistent or extremely rare.

Class 2 – Low potential: Sedimentary geological units not likely to contain vertebrate fossils or scientifically significant non-vertebrate fossils such as:

- Vertebrate or significant invertebrate or plant fossils not present or very rare
- Units that are generally younger than 10,000 years before present
- Recent eolian deposits
- Sediments that exhibit significant physical and chemical changes (i.e., diagenetic alteration)

The probability for the project toimpact vertebrate fossils or scientifically significant invertebrate or plant fossils is low. Assessment or mitigation of paleontological resources is not likely to be necessary. Localities containing important resources may exist, but would be rare and would not influence the classification. These important localities will be managed on a case-by-case basis and assessment or mitigation may be unnecessary except in rare or isolated circumstances.

Class 3 – Moderate or unknown potential: Fossiliferous sedimentary geological units where fossil content varies in significance, abundance, and predictable occurrence, or sedimentary units of unknown fossil potential such as:

- Often marine in origin with sporadic known occurrences of vertebrate fossils
- Vertebrate fossils and scientifically significant invertebrate and plant fossils known to occur intermittently and are predictably known to be low
- Poorly studied and/or poorly documented. Potential yield cannot be assigned without ground reconnaissance

Class 3, 4, and 5 units are divided into subclasses, as described below.

<u>Class 3a – Moderate potential</u>: Units are known to contain vertebrate fossils or scientifically significant invertebrate or plant fossils, but these occurrences are widely scattered. Common invertebrate or plant fossils may be found in the area and opportunities may exist for hobby collecting. The potential for a project to be sited on or impact a significant fossil locality is low, but the potential is somewhat higher for common fossils.

Class 3b – Unknown potential: Units exhibit geological features and preservational conditions that suggest significant fossils could be present, but little information about the paleontological resources of the unit or the area is known. This may indicate the unit or area is poorly studied, and field surveys may uncover significant fossils. The units in this class may eventually be placed in another class when sufficient surveying and research is performed. The unknown potential of the units in this class should be carefully considered when developing any mitigation or management plans.

This classification includes a broad range of paleontological potential. It includes geological units of unknown potential, as well as units of moderate or infrequent occurrence of fossil resources. Management considerations cover a broad range of options as well and could include pre-disturbance surveys, monitoring, or avoidance. Ground-disturbing activities will require sufficient assessment to determine where significant paleontological resources occur in the area of the proposed action and whether the action could affect the paleontological resources. These units may contain areas that would be appropriate to designate as hobby-collecting areas due to the higher occurrence of common fossils and lower concern about affecting significant paleontological resources.

Class 4 – High potential: Geological units containing a high occurrence of significant fossils. Vertebrate fossils or scientifically significant invertebrate or plant fossils are known to occur and have been documented, but may vary in occurrence and predictability. Ground-disturbing activities may adversely affect paleontological resources in many cases.

Class 4a – High potential: Units exposed with little or no soil or vegetative cover. Outcrop areas are extensive, with exposed bedrock areas often larger than two acres. Paleontological resources may be susceptible to adverse impacts from ground-disturbing actions. Illegal collecting activities may impact some areas.

Class 4b – High potential: These are areas underlain by geological units with high potential, but have lowered risks of human-caused adverse impacts and/or lowered risk of natural degradation due to moderating circumstances. The bedrock unit has high potential, but a protective layer of soil, thin alluvial material, or other conditions may lessen or prevent potential impacts to the bedrock resulting from the activity There include areas such as:

- Extensive soil or vegetative cover; bedrock exposures are limited or not expected to be impacted
- Exposed outcrop are smaller than two contiguous acres
- Outcrops form cliffs of sufficient height and slope so impacts are minimized by topographic conditions
- Where other characteristics are present that lower the vulnerability of both known and unidentified paleontological resources

The probability for impacting significant paleontological resources is moderate to high, and is dependent on the proposed action. Mitigation considerations must include assessment of the disturbance, which may include removal or penetration of the protective surface alluvium or soils, potential for future accelerated erosion, or increased

ease of access resulting in greater looting potential. If impacts to significant fossils can be anticipated, on-the-ground surveys prior to authorizing the ground-disturbing action usually will be necessary. On-site monitoring or spot-checking may be necessary during construction activities. Management prescriptions for resource preservation and conservation through controlled access or special management designation should be considered. Class 4 and 5 units may be combined as Class 5 for broad applications, such as planning efforts or preliminary assessments, when geological mapping at the appropriate scale is not available. Resource assessment, mitigation, and other management considerations are similar at this level of analysis, and impacts and alternatives can be addressed at a level appropriate to the application.

Class 5 – Very high potential: Highly fossiliferous geological units that consistently and predictably produce vertebrate fossils or scientifically significant invertebrate or plant fossils and are at risk of human-caused adverse impacts or natural degradation.

Class 5a – Very high potential: Units are exposed with little or no soil or vegetative cover. Outcrop areas are extensive with exposed bedrock areas often larger than two contiguous acres. Paleontological resources are highly susceptible to adverse impacts from ground-disturbing activities. Unit is frequently the focus of illegal collecting activities.

Class 5b – Very high potential: These are areas underlain by geological units with very high potential but have lowered risks of human-caused adverse impacts and/or lowered risk of natural degradation due to moderating circumstances. The bedrock unit has very high potential, but a protective layer of soil, thin alluvial material, or other conditions may lessen or prevent potential impacts to the bedrock resulting from ground-disturbing activity. These include areas such as:

- Extensive soil or vegetative cover; bedrock exposures are limited or not expected to be impacted.
- Exposed outcrop are smaller than two contiguous acres.
- Outcrops form cliffs of sufficient height and slope so impacts are minimized by topographic conditions.
- Where characteristics are present that lower the vulnerability of both known and unidentified paleontological resources

The probability of impacting significant fossils is high to very high. Vertebrate fossils or scientifically significant invertebrate fossils are known or can be reasonably expected to occur in the impact area. On-the-ground surveys prior to authorizing any ground-disturbing activities or land-use adjustments will usually be necessary. On-site monitoring may be necessary during construction activities. Mitigation will often be necessary before and/or during these actions. Official designation of areas of avoidance, special interest, and concern may be appropriate.

3.2 Potential Fossil Yield Classification and Condition Classification

The PFYC system replaces the Condition Classification system previously used by the BLM and defined in the *Handbook for Paleontological Resource Management* (BLM

1998). The three levels of the Condition Classification system correspond to the five levels of the PFYC as such:

- **Class 1** – PFYC 4 or 5
- **Class 2** – PFYC 3, 4, or 5 (based upon the geological unit)
- **Class 3** – PFYC 1 or 2

The shift from the Condition Classification system to the PFYC is the result of an effort to increase interagency cooperation and consistency by bringing the methodologies of the BLM and Forest Service in line with one another. The five-part PFYC system is an excellent tool during the planning stages of a given project, whereas a three-part system, similar to the Condition Classification system, may be used both in the field and the office for the purpose of assigning placement of paleontology monitors along the project corridor. This system consists of high, moderate/unknown, and low sensitivities that determine areas that will require on-site paleontological monitors during construction activities. Construction activities impacting high and moderate/unknown potential geological units are generally assigned paleontology monitors; whereas low potential units will not be monitored, unless fossil resources are discovered during the course of construction activity.

The Companies will use the PFYC in assigning fossil potential to Project bedrock units. Attachment A presents a summary of bedrock units and estimates of PFYC for the Proposed Route.

4.0 PALEONTOLOGICAL STIPULATIONS AND METHODS

The following stipulations and methods to be employed if paleontological resources are discovered during construction and development of the Project. The specifics of the efforts are described in greater detail in Appendix Z of the POD.

4.1 Stipulations and Methods

Before Construction: An orientation workshop shall be prepared, reviewed by the BLM, and presented by a professional paleontologist to explain paleontological mitigation guidelines and procedures to the contractor and construction workers. This workshop can be presented in conjunction with any pre-construction meetings conducted prior to excavation. The workshop will review the PRTP and will endeavor to explain the nature, appearance, and importance of fossil vertebrates, invertebrates, and plants. The responsibilities of construction personnel in a paleontological mitigation context will also be explained. Construction workers shall not collect any fossils found during construction before their significance can be assessed by a qualified paleontologist.

During Construction: If paleontological resources (fossils) are found at any time during construction, work shall be redirected to another area nearby and the authorized BLM officer contacted so the scientific significance of the discovery may be assessed. If warranted, a qualified professional paleontologist with regional experience appointed by the BLM may then assess the significance of the discovery and recommend additional mitigation measures, as necessary. The paleontologist may be retained to perform inspection of the excavation and to salvage exposed fossils. A standard sample of

fossiliferous sediment may be collected for the collection and identification of terrestrial microvertebrates (e.g., rodents, birds, rabbits). The paleontologist may also determine whether the fossil is part of an archaeological deposit. If so, it shall then be considered a cultural resource discovery and treated according to the procedures specified in the Historic Properties Treatment Plan prepared prior to construction.

After Construction: For any fossils (vertebrate, invertebrate, and/or plant) collected during construction, a data collection program shall be undertaken that includes preparation of collected specimens to a point of identification and permanent preservation (including screen washing of fossiliferous sediment samples to collect small to microscopic vertebrate fossils); preparation of large vertebrate fossils collected in plaster jackets; long-term stabilization of all collected significant fossils; and analysis. The paleontological salvage team shall include an expert in vertebrate paleontology. A final report, including an itemized and accessioned inventory of collected specimens, shall be prepared by a professional vertebrate paleontologist and distributed to the BLM, Oregon Department of Geology and Mineral Industries, and Idaho Geological Survey. All fossils collected during construction shall be curated at a qualified research facility, such as the paleontology museum at College of Idaho (Idaho) or Eastern Oregon College (Oregon). A repository agreement for curation would be reviewed and approved by the third-party contractor on behalf of the Companies, BLM, and the repository, which would provide guaranteed future research access to the fossils. Fossils discovered on private land would be considered property of the landowner. The landowner would have the option to keep the fossils or donate them to a federally approved, professional repository, preferably the same repository receiving fossils discovered on federal and state lands

4.2 Construction Personnel Procedures

Crews and supervisors should be on the lookout at all times for fossils, bones, animal trackways, charcoal, ash, or other paleontological resources exposed during excavation or ground-disturbing activities. Upon encountering an exposed fossil or other paleontological resource, the construction crew will stake-off and flag an area of approximately 2 meters on all sides of the discovery to alert equipment operators to the presence of the potential resource. Construction crews must avoid these staked-off/flagged areas by a minimum of 6 meters until the authorized BLM officer has been contacted and has authorized continued excavation.

4.3 Collection/Replication of Fossil Trackways

Unique fossil trackways may occur within the area of potential effect of the Project, or adjacent to the Project area. Trackways are highly visible and are subject to removal by unauthorized collection. In the event that trackways cannot be avoided, overburden will be removed to expose the trackways, which will then either be removed (preferred) or replicated for curation. Collected specimens will be curated at an approved repository in accordance with appropriate federal, state, and county permits.

4.4 Curation Plan

Curation of fossil specimens collected during the paleontological mitigation program includes the preparation of collected specimens to a point of identification and

permanent preservation, including the screen washing of fossiliferous sediment samples to collect small to microscopic vertebrate fossils. Large specimens encased in plaster jackets taken from the site will be prepared in the paleontology laboratory.

The curation plan calls for laboratory preparation of collected fossil remains to a point of identification and permanent preservation (*not* exhibition). This preparation generally requires exposure of the collected resource(s) by removal of the surrounding sedimentary matrix from the jacket. This matrix may be saved for later microfossil processing. Once the matrix has been removed and the specimen has been cleaned, the fossil is hardened with Vinac, a modified polyvinyl acetate homopolymer, which has been thinned with acetone to enable the hardener to more fully penetrate the fossil. Vinac may be applied several times before the fossil is deemed to be sufficiently sturdy for permanent storage. Excess plaster from the jacket is then trimmed to reduce the amount of storage space required by the specimen.

The curation plan also includes the processing of standard samples of fossiliferous matrix. The sedimentary matrix will be washed with water through stacked sets of 20- and 30-mesh screens and sun dried. Where appropriate, some sediment samples may be washed through more finely meshed screens to enable the collection of microscopic ostracodes or fossil pollen. To accelerate the breakdown of the fossiliferous matrix, sediments will be oven-roasted to promote drying and then re-submerged in water to facilitate disaggregation of clays and fine silts. Subsequent screen washing will remove these fine sediments and leave fossil specimens in a clean concentrate. This concentrate will be visually examined with a binocular microscope and hand-sorted to remove fossil specimens.

The curation plan further includes sampling for fossil pollen. In those cases where pollen is identified from bulk samples in the field, additional sampling should be initiated where warranted in a series of more precise (e.g., 2 centimeters) sampling horizons. This will potentially enable determination of changes in plant distributions and microclimate through time.

Should plant macrofossils be exposed or identified during a mitigation program, such fossils should be collected and prepared to a point of identification and permanent preservation (*not* exhibition). Preparation generally requires full exposure of the collected resource(s) by splitting of thin sedimentary layers along their bedding planes, followed by application of a hardening agent. Misting with a 10:1 water/white glue mixture is usually sufficient for preserving such fossils. Application of nitrocellulose thinned with acetone is also recommended in some instances (LePage and Basinger 1993). In some cases, select rock slabs thought to contain fossilized plant remains will be left intact for future researchers.

Other curatorial tasks will include the identification, curation, and accessioning of all collected specimens into the retrievable storage collections of an approved, accredited curation facility. All data pertaining to the specimens will be recorded in the collections database of the repository. Resource locality information will also be plotted on topographic maps and entered into a computerized locality database. Card stock printouts of all pertinent faunal, floral, locational, and lithologic data pertaining to each resource locality will be produced and filed. Card stock files from the locality database will also be printed and kept on file.

Following preparation, fossils will be stored in steel cabinets with steel geological specimen trays. Accession and locality data will be printed in archival ink on acid-free paper tags associated with each specimen, generated from the specimen database. Accession numbers of large fossils will be written on the bone in permanent ink. Large fossils will be stored in their plaster jackets where necessary to help retain the integrity of the bone. Excess plaster will be cut away prior to storage to maximize storage space. Microfossils will be stored in glass vials with cork stoppers. Extremely small specimens (e.g., ostracodes) will be placed in gelatin capsules within the glass vials. Accession data slips, also generated from the computer database, will be placed inside each of the glass vials to prevent accidental shuffling of the collection, and provide a means of "earthquake-proofing" the collection. The glass vials will be placed in cardboard jewelers' boxes with their data slips, then permanently stored in the geological specimen trays. Labels bearing accession number data will be glued to rock slabs bearing marine invertebrates or fossil plant remains, in such a manner so as not to damage or obscure the fossil(s).

Specimens collected during the course of the mitigation program will be identified by professional paleontologists who have appropriate expertise in vertebrate and invertebrate paleontology and paleobotany.

The fossils will be curated, stored, and accessioned into the permanent retrievable collections of a recognized, accredited repository. All paleontological resources will be catalogued and accessioned under a unique number, which will identify the appropriate property and/or development project as the source of the fossils.

A final report of methods and results of the paleontological mitigation plan will be provided at the cessation of the mitigation program. The report will include a detailed discussion of how the research goals of the project have been met, in addition to descriptions of significant discoveries, discussion of the curation of the resources, and results of sampling and analysis, as well as an itemized accession inventory of all specimens collected. A discussion of the significance of each taxon discovered will be provided, where feasible. All resource locality information will be presented as a confidential appendix and a printout of all locality data, as well as pull-out maps with all paleontological resource localities plotted.

5.0 LITERATURE CITED

BLM (Bureau of Land Management). 1998. General Procedural Guidance for Paleontological Resource Management. BLM Handbook H-8270-1.

———. 2008. Potential Fossil Yield Classification (PFYC) System. Instruction Memorandum No. 2008-009.

——— 2009. Guidelines for Assessment and Mitigation of Potential Impacts to Paleontological Resources. Instruction Memorandum No. 2008-011-attach 1.

DOI (Department of Interior). 2000. Fossils on Federal and Indian Lands: Assessment of Fossil Management on Federal and Indian Lands: Report of the Secretary of the Interior (Bruce Babbitt).

LePage, B.A., and J.F. Basinger. 1993. The Use of Lacquer (nitrocellulose) for the Coating and Preservation of Fossil Leaf Impressions. *Journal of Paleontology* 67: 128-134.

ATTACHMENT A
BEDROCK AND FOSSIL POTENTIAL SUMMARY

Attachment A Paleontological Sensitivity Rankings for Proposed Routes

Segment Number	Segment Length (miles)	Formation Name	Miles Crossed	Sensitivity Rating
1W(a)	**76.5**	Chugwater Formation or group	5.3	3
		Goose egg Formation	5.5	2
		Cody shale	2.6	3
		Frontier Formation	0.4	3
		Fox Hills sandstone sandstone	1.1	3
		Cloverly, Morrison, and Sundance Formations	1.8	3
		Lance Formation	3.8	3
		Mowry and Thermopolis shales	0.9	3
		Mesaverde group	8.5	3
		Niobrara Formation	1.0	5
		Steele shale	3.1	3
		Casper Formation	2.4	3
		Tensleep sandstone and Amsden Formation	0.1	2
		Madison limestone, Darby Formation, Bighorn dolomite, Gallatin Limestone, GrosVentre Formation and Flathead sandstone	0.5	3
		Alluvium and colluvium	3.8	2
		Dune sand and loess	4.4	2
		Upper Miocene Rocks	3.3	5
		Wind River Formation - at base locally includes equivalent of Indian Meadows Formation	8.4	5
		White River Formation, upper conglomerate member	7.9	5
		Archean Granitic Rocks	5.2	1
		Granite Gneiss	2.1	1
		Paleontological Sensitivity Ranking	**250.8**	
1W(c)	**70.6**	Chugwater Formation or group	7.7	3
		Goose egg Formation	3.8	2
		Cody shale	4.0	3
		Frontier Formation	0.6	3
		Fox Hills sandstone	1.0	3
		Cloverly, Morrison, and Sundance Formations	0.5	3
		Lance Formation	5.0	3
		Mowry and Thermopolis shales	0.7	3
		Mesaverde group	0.6	3
		Niobrara Formation	1.2	5
		Steele shale	2.2	3
		Casper Formation	2.5	3
		Madison limestone, Darby Formation, Bighorn dolomite, Gallatin Limestone, GrosVentre Formation and Flathead sandstone	0.7	3
		Alluvium and colluvium	7.7	2
		Upper Miocene Rocks	2.5	5
		Wind River Formation - at base locally includes equivalent of Indian Meadows Formation	9.3	5
		White River Formation, upper conglomerate member	7.8	5
		Whiter River Formation	4.5	5
		Archean Granitic Rocks	5.9	1
		Granite Gneiss	2.3	1
		Paleontological Sensitivity Ranking	**234.2**	

Attachment A Paleontological Sensitivity Rankings for Proposed Routes

Segment Number	Segment Length (miles)	Formation Name	Miles Crossed	Sensitivity Rating
2	**96.7**	Lance Formation	4.2	3
		Lewis shale	4.4	3
		Medicine Bow Formation	0.8	3
		Mesaverde group	8.4	3
		Niobrara Formation	0.5	5
		Steele shale	2.9	3
		Steele shale and Niobrara Formation	8.5	5
		Alluvium and colluvium	8.1	2
		Playa lake and other lacustrine deposits	4.4	2
		Gravel, pediment, and fan deposits	0.7	2
		Fort Union Formation	12.5	3
		Hanna Formation	21.7	5
		Ferris Formation	1.1	5
		Miocene Rocks	8.5	3
		Wasatch Formation	10.0	5
		Paleontological Sensitivity Ranking	**360.3**	
3	**56.5**	Almond Formation	4.7	3
		Fox Hills sandstone and Lewis shale	7.6	3
		Lance Formation	2.3	3
		Alluvium and colluvium	1.9	2
		Playa lake and other lacustrine deposits	2.3	2
		Dune sand and loess	5.0	2
		Fort Union Formation	5.0	3
		Green River Formation	11.2	5
		Wasatch Formation	16.4	5
		Paleontological Sensitivity Ranking	**215.3**	
4	**203.0**	Ankareh Formation, Thaynes limestone, Woodside shale, and Dinwoody Formation	2.4	3
		Nugget sandstone	2.1	3
		Stump Formation, Preuss sandstone or redbeds, and Twin Creek limestone	5.3	3
		Aspen shale	0.6	3
		Almond Formation	4.7	3
		Baxter shale	3.2	3
		Blair Formation	4.0	3
		Bear River Formation	0.4	3
		Ericson sandstone	2.5	3
		Frontier Formation	0.8	3
		Fox Hills sandstone and Lewis shale	1.7	3
		Gannett group	0.7	3
		Hilliard shale	1.0	3
		Rock Springs Formation	8.5	3
		Sage Junction, Quely, Cokeville, Thomas Fork, and Smiths Formations	1.0	3
		Sage Junction, Quely, Cokeville, Thomas Fork, and Smiths Formations	0.2	3
		Wells and Amsden Formations	1.2	3
		Phosphoria Formation and related rocks	0.6	3
		Alluvium and colluvium	7.6	2
		Landslide deposits	0.2	1
		Dune sand and loess	2.9	2

Attachment A Paleontological Sensitivity Rankings for Proposed Routes

Segment Number	Segment Length (miles)	Formation Name	Miles Crossed	Sensitivity Rating
		Gravel, pediment, and fan deposits	6.6	2
		Terrace gravel (Pleistocene and/or Pliocene)	1.5	2
		Bridger Formation	34.5	5
		Fowkes Formation (Pliocene? and Eocene)	0.6	3
		Fort Union Formation	1.3	3
		Green River Formation	22.1	5
		Evanston Formation	0.3	3
		Salt Lake Formation	0.4	3
		Wasatch Formation	17.0	5
		Alluvium, Eolian Loess	11.6	3
		Alluvial-fan deposits	0.2	3
		Bonneville and Alpine Formations	4.7	3
		Alluvium		
		Main Canyon Formation of Bright		
		Tufa and Travertine		
		Salt Lake Formation		
		Alluvium	1.1	3
		Formation of Marsh Valley		
		Salt Lake Formation	3.0	3
		Salt Lake Formation, Upper Conglomerate Unit	17.4	5
		Salt Lake Formation, Skyline Member		
		Salt Lake Formation, Cache Valley Member		
		Colluvium (Pleistocene)		
		Eolian Loess	3.6	3
		Salt Lake Formation	0.2	3
		Nugget Sandstone		
		Thaynes Limestone	3.7	5
		Twin Creek Limestone	5.2	3
		Alluvium		
		Nugget Sandstone	0.5	3
		Swan Peak Quartzite	4.6	3
		Garden City Limestone		
		St. Charles Limestone		
		Nounan Limestone	5.5	4
		St. Charles Limestone		
		Worm Creek Quartzite Member		
		Brigham Quartzite	0.3	3
		Diamicton	5.7	3
		Brigham Quartzite		
		Paleontological Sensitivity Ranking	**785.1**	
5	54.6	Great Blue Limestone, lower limestone member	3.1	3
		Floodplain sediments	1.9	3
		Formation of Marsh Valley		
		Loess		
		Alluvial-fan deposits	12.7	3
		Eolian Loess		
		Alluvial deposits		
		Loess		
		Alluvial fan gravel		
		Alluvial fan gravel	0.6	3
		Dune sand	0.0	3

Attachment A Paleontological Sensitivity Rankings for Proposed Routes

Segment Number	Segment Length (miles)	Formation Name	Miles Crossed	Sensitivity Rating
		Alluvial fan gravel		
		Bonneville flood gravel	4.8	3
		Formation of Marsh Valley		
		Starlight and Salt Lake Formations, undifferentiated	0.7	4
		Sunbeam Formation	2.0	3
		Alluvium		
		Loess	1.8	4
		Starlight and Salt Lake Formations, upper member		
		Starlight and Salt Lake Formations, undifferentiated	2.2	4
		Starlight and Salt Lake Formations, upper member		
		Oquirrh Formation, Unit D	1.7	3
		Oquirrh Formation, Unit B	12.2	3
		Oquirrh Formation, Unit A, lower limestone		
		St. Charles Formation, upper member	0.8	3
		Garden City Formation		
		Garden City Formation	4.4	3
		Swan Peak Quartzite		
		Fish Haven Dolomite		
		St. Charles Formation, upper member		
		Alluvium (Holocene and Pleistocene)	0.7	2
		American Falls Lake Beds (upper Pleistocene)	0.4	3
		Raft Formation (upper or middle Pleistocene)	0.7	2
		Dune sand and loess	0.4	2
		Sun Beam Formation (Upper Pleistocene)	2.8	2
		Terrace gravel (Pleistocene)	0.4	2
		Massacre Volcanics (Pliocene and upper Miocene)	0.1	3
		Walcott Tuff (upper Miocene)	0.0	3
		Water	0.2	0
		Paleontological Sensitivity Ranking	**162.9**	
6	**0.5**	Dune sand and loess	0.2	2
		Basalt of Notch Butte	0.3	2
		Mixed alluvial and lacustrine deposits		
		Basalt of Bacon Butte		
		Paleontological Sensitivity Ranking	**1.0**	
7	**118.1**	Floodplain sediments	3.2	3
		Formation of Marsh Valley		
		Loess		
		Alluvial-fan deposits	40.1	3
		Eolian Loess		
		Alluvial deposits		
		Loess		
		Alluvial fan gravel		
		Alluvial fan gravel	13.3	3
		No detail	9.4	3
		Bonneville flood gravel	8.5	3
		Formation of Marsh Valley		
		Starlight and Salt Lake Formations, undifferentiated	12.5	4
		Sunbeam Formation	5.3	3
		Alluvium		
		Loess	2.2	4
		Starlight and Salt Lake Formations, upper member		

Attachment A Paleontological Sensitivity Rankings for Proposed Routes

Segment Number	Segment Length (miles)	Formation Name	Miles Crossed	Sensitivity Rating
		No detail - possilby rhyolite	2.0	3
		Salt Lake Formation, undifferentiated	2.1	3
		Oquirrh Formation, Unit D	5.8	3
		Oquirrh Formation, Unit B	6.4	3
		Oquirrh Formation, Unit A, lower limestone		
		St. Charles Formation, upper member	0.9	3
		No detail - Mississippian sedimentary units	0.9	3
		No detail - Devonian sedimentary units	0.4	3
		Garden City Formation	5.0	3
		Fish Haven Dolomite		
		St. Charles Formation, upper member		
		Paleontological Sensitivity Ranking	**368.9**	
8	**131.0**	Alluvium	3.1	3
		No-Detail gravel deposits	1.3	3
		Alluvium	1.3	3
		Cold Springs Creek lava flow	0.1	2
		Bonneville Flood Deposits	1.3	3
		Pebble gravel in conspicuous iron-stained beds as much as 25 feet thick in lake deposits	1.4	3
		Black Mesa Gravel	2.7	3
		Basalt of Higby Cave	4.1	2
		Basalt of Sand Creek	5.1	2
		Sedimentary material dominated by massive lake beds of white-weathering fine silt, clay, and diatom	0.1	3
		Dune Sand	0.2	3
		Upper Basalt of Halverson Lake	0.4	2
		Basalt of Initial Point	5.8	2
		Pleistocene waterlaid detritus; may be distal deposits of glacial floods and outwash	14.7	3
		Middle Pleistocene plateau and canyon-filling basalt in and near the Snake Plain	20.6	2
		Middle Pleistocene plateau and canyon-filling basalt in and near the Snake Plain	3.9	3
		Pleistocene outwash, fanglomerate, flood and terrace gravels	2.5	3
		Upper Pleistocene Snake Plain lava flows	2.7	2
		Upper Pleistocene Snake Plain lava flows	16.7	2
		Recent relatively un weathered Snake Plain Basalt flows and cinder cones	8.2	2
		Basalt of Swan Falls Road Hill	0.9	2
		Undifferentiated basalt flows on the periphyry of the Birds of Prey area whose sources are unknown	0.8	2
		Lower Pleistocene to Pliocene basalts with associated tuffs and volcanic detritus	4.6	3
		Glenns Ferry Formation of the Idaho Group, includes some younger lacustrine and fluvial sediments	4.9	5
		Gravel and associated clastic materials from southern sources, includes materials transported from the Owyhee Mountains	3.3	5
		Basalt of Orchard Ranch	2.6	2
		Basalt of the Tombstone Patch Rapids	1.4	2

Attachment A Paleontological Sensitivity Rankings for Proposed Routes

Segment Number	Segment Length (miles)	Formation Name	Miles Crossed	Sensitivity Rating
		Idaho Group and other fluvial, lacustrine, and eolian sediments in the northeast part of the Murphy Quadrangle	12.9	5
		Basalt flows associated with the Chalk Hills and Poison Creek Formations	0.3	5
		Poison Creek and Chalk Hill Formations, undivided	1.7	5
		Water	0.1	0
		Basaltic tuff of Waldvogel Canal	0.0	2
		Basaltic tuff of McDermott Road	0.0	2
		Middle basalt of Halverson Lake	0.1	2
		Chalky volcanic field	1.2	3
		Paleontological Sensitivity Ranking	**369.4**	
9	**162.2**	Fan alluvium 2 (upper Pleistocene)	0.1	3
		Colluvium derived from hard rocks (Holocene to Lower Pleistocene)	0.9	3
		Loess Unit 2: thin loess overlying basalt (Upper and Middle Pleistocene)	2.4	3
		Loess Unit 3, Moderately thick loess overlying basalt (upper to lower? Pleistocene)	22.8	3
		Deposits of Playas (Holocene and Upper Pleistocene)	0.4	3
		Alluvium	0.6	3
		Alluvium	7.1	3
		Alluvium of sidestreams (Holocene)	0.2	3
		Deadman Canyon Lava flow	0.1	2
		Black Mesa Gravel	6.8	3
		Sedimentary material dominated by massive lake beds of white-weathering fine silt, clay, and diatom	6.1	3
		Basalt of Hub Butte (Pleistocene)	4.5	2
		Pleistocene outwash, fanglomerate, flood and terrace gravels	1.3	3
		Lower Pleistocene outwash, fanglomerate, flood and terrace gravels	8.2	3
		Middle Pleistocene plateau and canyon-filling basalt in and near the Snake Plain	0.3	2
		Middle Pleistocene plateau and canyon-filling basalt in and near the Snake Plain	5.2	3
		Tuana Gravel	0.6	3
		Glenns Ferry Formation	7.5	5
		Idaho Group and other fluvial, lacustrine, and eolian sediments in the northeast part of the Murphy Quadrangle	5.8	5
		Rhyolite of castleford Crossing (Miocene)	3.5	2
		Basalt of Devil Creek Butte or Tuana Butte (Pliocene or Miocene)	0.6	2
		Pliocene silicic welded tuff, ash and flow rock; most common in southwestern Idaho	5.0	2
		Tuff of McMullen Creek	3.9	2
		Basalt of the Murphy Area	6.2	2
		Pliocene olivine basalt flows and associated tuff and detritus of southern Idaho	1.6	3
		Poison Creek and Chalk Hill Formations, undivided	6.0	5

Attachment A Paleontological Sensitivity Rankings for Proposed Routes

Segment Number	Segment Length (miles)	Formation Name	Miles Crossed	Sensitivity Rating
		Rhyolite lava flows of Reynolds Creek	0.4	2
		Teapot volcanic field	1.5	3
		Upper Member of Tuff of Wooden Shoe Butte	0.4	3
		Alluvial fan deposits (Holocene and Pleistocene)	3.8	3
		Landslide deposits (Holocene to Middle Pleistocene)	0.2	3
		Pebble gravel in conspicuous iron-stained beds as much as 25 feet thick in lake deposits	0.2	3
		Talus	0.1	3
		Gravel surface, abundant Eocene volcanics (Quaternary or Tertiary)	0.3	3
		Gravel surface, abundant quartzite (Quaternary and Tertiary)	0.7	3
		Gravel lens or surface, abundant quartzite (Tertiary)	1.1	3
		Clay to sand sized sediments (Miocene or Pliocene)	25.3	3
		Chalky volcanic field	0.7	3
		Basalt of Sinker Creek	0.4	2
		Glenns Ferry Formation of the Idaho Group, includes some younger lacustrine and fluvial sediments	10.0	5
		Idaho Group and other fluvial, lacustrine, and eolian sediments in the northeast part of the Murphy Quadrangle	8.7	5
		Chalk Hills Formation of the Idaho Group	0.7	5
		Paleontological Sensitivity Ranking	**539.0**	
10	**33.6**	Open Water	0.3	N/A
		Alluvium of side streams	0.4	3
		Alluvial-fan deposits	1.7	3
		Basalt of Skelaton Butte	4.2	2
		Basalt of Rocky Butte	15.3	2
		Basalt of Wilson Butte		2
		Basalt of Notch Butte	2.9	3
		Mixed alluvial and lacustrine deposits		
		Basalt of Bacon Butte		
		Basalt of Hansen Butte	8.8	2
		Younger Tertiary basalt flows, undivided		
		Paleontological Sensitivity Ranking	**71.5**	

Note: Mileages have been rounded to the nearest tenth of a mile; therefore, numbers are inexact and columns/rows may not sum exactly

APPENDIX K
FRAMEWORK AGRICULTURAL PROTECTION PLAN

Appendix K

Framework Agricultural Protection Plan

Gateway West Transmission Line Project

Prepared by:

PacifiCorp
1407 W. North Temple
Salt Lake City, UT 84116

and

Idaho Power Company
1221 West Idaho Street
Boise, ID 83702

January 2013

TABLE OF CONTENTS

1.0 INTRODUCTION K-1
2.0 CONDITIONS K-1
3.0 OTHER APPLICABLE PLANS K-2
4.0 ENVIRONMENTAL PROTECTION MEASURES K-2
5.0 PLAN UPDATES K-3

1.0 INTRODUCTION

Rocky Mountain Power and Idaho Power Company (Companies) are proposing to construct and operate approximately 1,000 miles of new 230-kilovolt (kV), 345-kV and 500-kV alternating current electric transmission system, called the Gateway West Transmission Line Project (Project), consisting of 10 segments between the Windstar Substation at Glenrock, Wyoming, and the Hemingway Substation approximately 30 miles southwest of Boise, Idaho. The proposed transmission line is needed to supplement existing transmission lines in order to relieve operating limitations, increase capacity, and improve reliability in the existing electric transmission grid, allowing for the delivery of up to 1,500 megawatts of additional energy for the Companies' larger service areas and to other interconnected systems. The Project includes ground-disturbing activities associated with the construction of above-ground, single-circuit transmission lines involving towers, access roads, multiuse areas, fly yards, and pulling sites as well as associated substations, communication sites, and electrical supply distribution lines. The Project crosses private land and public lands administered by the Bureau of Land Management (BLM), U.S. Forest Service (Forest Service), and the states of Idaho and Wyoming.

This Framework Agricultural Protection Plan (Plan) describes the framework for the measures intended to mitigate or provide compensation for agricultural impacts that may occur due to the construction of the Project. A goal of this Plan is to provide a basis for the Companies' discussions with owners of property where the final Project will be sited. This Plan shall not be construed as establishing any contractual obligations or representations between the Companies and any party and shall not create any third-party beneficiary rights between the Companies and any party. Proposed agriculture protection measures that will be included in the final agricultural protection plan (Final Plan) are included in Appendix Z of the Plan of Development (POD).

2.0 Conditions

For the purpose of the Plan, agricultural land is defined as annually cultivated or rotated cropland, land in perennial field crops, improved pasture, hayfields, and land in the conservation or grazing reserve programs.

Unless an easement agreement specifically provides to the contrary, the Companies will implement the protection measures described in the Final Plan in accordance with the following conditions:

- The protection measures and conditions described in the Final Plan apply only to construction activities occurring partially or wholly on privately owned agricultural land. They do not apply to construction activities on public right-of-ways (ROW), railroad ROWs, public land, or private land that is not agricultural land, except where agricultural structures, such as drainage tile and irrigation systems associated with privately owned agricultural land, pass through or extend into these areas.

- The Companies will provide a copy of the Final Plan to any landowner or landowner's designate and tenant of agricultural land prior to obtaining an easement.
- The Companies may negotiate with the landowner or landowner's designate to carry out the protections that landowners wish to perform themselves.
- The Companies will implement the protection measures contained in the Final Plan to the extent that they do not conflict with the requirements of any applicable federal, state, and local rules and regulations and other permits and approvals obtained by the Companies for the Project.
- The Companies will implement the protection measures contained in the Final Plan to the extent that they are consistent with the protection measures approved by, or other requirements of, permits and approvals issued by governing agencies.
- Certain provisions of the Plan require that the Companies consult with and/or obtain agreement with the landowner and the tenant of a property. The Companies will make a good-faith effort to secure the agreement of both the landowner and tenant in such cases. If there is a disagreement between the landowner and tenant, the Companies will secure the landowner's agreement unless the tenant can demonstrate a superior legal right in the matter.

Nothing in this document is intended to grant or suggest jurisdiction by any agency over remedies for property compensation resolved in accordance with Wyoming or Idaho law.

3.0 Other Applicable Plans

Measures for erosion control, dust control, soil protection, weed control, and restoration that will reduce impacts on agriculture are contained in the following framework plans:

- Traffic and Transportation Management Plan (Appendix L of the POD)
- Spill Prevention, Containment, and Countermeasures (SPCC) Plan (Appendix G of the POD)
- Stormwater Pollution Prevention Plan (SWPPP) (Appendix F of the POD)
- Reclamation Plan (Appendix D of the POD)
- Stream, Wetland, Well, and Spring Protection Plan (Appendix I of the POD)

4.0 ENVIRONMENTAL PROTECTION Measures

The Companies are committing to implementing the environmental protection measures contained in Appendix Z of the POD.

5.0 Plan Updates

When the preferred route is selected and final engineering is complete, the Final Plan will be prepared. The final Plan will be updated prior to the start of construction. As the Companies better define the construction order and schedule, the Final Plan will be updated to include the schedule for baseline inventories, negotiations, and road locations.

APPENDIX L
FRAMEWORK TRAFFIC AND TRANSPORTATION MANAGEMENT PLAN

Appendix L

Framework Traffic and Transportation Monitoring Plan
Gateway West Transmission Line Project

Prepared by:

PacifiCorp
1407 W. North Temple
Salt Lake City, UT 84116

and

Idaho Power Company
1221 West Idaho Street
Boise, ID 83702

January 2013

TABLE OF CONTENTS

1.0 INTRODUCTION L-1
2.0 PURPOSE L-1
3.0 REGULATORY L-1
4.0 TRAFFIC MANAGEMENT PRACTICES L-2
5.0 LEVELS OF RIGHT-OF-WAY ACCESS L-3
5.1 Paved Roads L-3
5.2 Existing Unpaved Roads Not Requiring Improvements L-3
5.3 Existing Unpaved Roads Requiring Improvements L-3
5.4 New Access Roads L-3
5.5 Temporary Roads L-4
6.0 MITIGATION MEASURES L-4

1.0 INTRODUCTION

Rocky Mountain Power and Idaho Power Company (Companies) are proposing to construct and operate approximately 1,000 miles of new 230-kilovolt (kV), 345-kV and 500-kV alternating current (AC) electric transmission system consisting of 10 segments between the Windstar Substation at Glenrock, Wyoming, and the Hemingway Substation approximately 30 miles southwest of Boise, Idaho. The proposed transmission line is needed to supplement existing transmission lines in order to relieve operating limitations, increase capacity, and improve reliability in the existing electric transmission grid, allowing for the delivery of up to 1,500 megawatts (MW) of additional energy for the Companies' larger service areas and to other interconnected systems. The Project includes ground-disturbing activities associated with the construction of above-ground, single-circuit transmission lines involving towers, access roads, staging areas, fly yards, pulling sites as well as associated substations, communication sites, and electrical supply distribution lines. The Project crosses private land and public lands administered by the Bureau of Land Management (BLM), U.S. Forest Service (USFS), and the states of Idaho and Wyoming.

This Framework Traffic and Transportation Management Plan addresses regulatory compliance, traffic management practices, levels of right-of-way access, and protection measures to help reduce impacts related to transportation and the construction of temporary and long-term access within the vicinity of the Gateway West Transmission Line Project (Project). This document provides a template for a detailed Traffic and Transportation Management Plan to be developed by the Construction Contractor.

2.0 PURPOSE

The purpose of this plan is to provide the Bureau of Land Management (BLM) and other public agencies and the Construction Contractor with a description of the type of access associated with the construction, operation, and maintenance of this Project, and to make evident the potential impacts which could be created by construction and operation of the Project. The goal of this plan is to ensure that impacts from construction of the transmission line and any associated access are kept to a minimum through the use of management practices and mitigation measures described throughout this appendix. These practices and measures are intended to mitigate the effects of transportation on environmental resources, roads, traffic, travel, and road safety.

3.0 REGULATORY

A number of agencies have jurisdiction over the transportation-related components of the Project. These include the BLM, the Wyoming Department of Transportation, Idaho Transportation Department, Federal Highway Administration, local law enforcement and road departments and local highway districts in the counties crossed by the Project. Encroachment permit applications will need to be filed with appropriate road agencies for those areas where the transmission line crosses public roads prior to construction.

Other permits and approvals not directly related to transportation could affect the construction, use, and/or maintenance of roads in certain areas. Persons responsible

for Project transportation activities must be familiar with all relevant sections of Project's Plan of Development (POD).

4.0 TRAFFIC MANAGEMENT PRACTICES

Ground travel will be the primary means of transporting construction and maintenance crews and equipment during Project construction. Helicopters will be used as deemed necessary. All vehicles will obey jurisdictional traffic speed regulations and the posted speed limit. Speeds along access roads and spur roads within the right-of-way may be limited to 15 mph in some areas to prevent excessive amounts of construction related dust, as necessary.

Before construction, authorized access routes will be clearly marked in the field with signs or flagging. The Construction Contractor will review the location of permitted access and will be responsible for ensuring construction travel is limited to designated areas that clearly identify the limits of disturbance.

All field personnel will attend an environmental training program. Through this program, field personnel will be instructed to use only approved access roads, drive within the delineated road limits, and obey jurisdictional and posted speed limits to minimize potential impacts to biological, paleontological, and cultural resources.

Every effort will be made to minimize the effects of the Project construction activities on public transportation and to provide for public safety. The Construction Contractor and all environmental monitors will maintain a communications network that consists of one or both of the following devices: two-way radios or cellular phones. This will allow for coordination of equipment traffic along existing access roads so public safety, traffic impacts, and resource impacts are minimized. In addition, any necessary permits for the movement of equipment and materials will be obtained and complied with.

In general, the number of construction vehicles needed for the Project is not expected to substantially increase traffic volumes. Similarly, road and land closures are anticipated to be minimal, and will most likely occur during conductor stringing activities or during blasting. If road and lane closures are needed, the appropriate regulatory agencies, affected parties, and emergency service providers will be notified in advance.

Although construction traffic is not expected to disrupt access to residences along the right-of-way, adjacent landowners will be notified of the construction schedule (where appropriate). Signs will be posted in the Project area to notify landowners and others of the construction activity. Flagging will be maintained until final cleanup and/or reclamation is completed, after which they will be removed.

- A flagging scheme will be included in the final plan covering:
- Project access road;
- Temporary work areas (pulling sites, material yards, etc.);
- Protected animals/plants or sensitive environmental areas;
- Invasive weed cleaning stations;
- Proposed structure locations;
- Structure offsets;

- Outside edge of permitted right-of-way or centerline; and
- Cadastral survey monument

Construction crews will park only in designated areas and will be shuttled to the appropriate work sites if necessary.

5.0 LEVELS OF RIGHT-OF-WAY ACCESS

Access to the Project right-of-way and other areas (e.g., multi-purpose areas), will be needed for Project construction, operation, and maintenance activities. Listed below are five types of roadways that will be used for this transmission line.

5.1 Paved Roads

These roads are typically highways and state routes and will be used for travel to existing and new dirt roads to access the right-of-way. No staking will be required for this type of access.

5.2 Existing Unpaved Roads Not Requiring Improvements

These are existing dirt or gravel roads that generally will not require any improvements to support construction vehicles to access the right-of-way. Regular maintenance for construction (regarding wash-out areas, graveling, and installation of gravel pads for controlling trackout) is allowed in these areas. The outer edge of existing dirt access roads that have been approved for the Project will be staked. If it is determined that one of these roads does need improvement, the Companies must be notified and any change approved through the variance process described the Environmental Compliance and Management Plan – Appendix C to this POD.

5.3 Existing Unpaved Roads Requiring Improvements

These are existing dirt or gravel roads that may require improvements to support construction vehicles to access the right-of-way, and may be widened to a minimum of 14 feet wide travel way and 16- to 20-foot-wide road width in turns. Improvements to these existing roads may include road widening, road straightening/realignment, mowing, blading, tree removal, and bridge/culvert construction. These roads will require reclamation to pre-construction condition if they are not identified as service roads for future operation and maintenance of the transmission line. The required road disturbance area and travel way in areas of rolling to hilly terrain will require a wider disturbance to account for cuts and fills, turning radii, and/or where vehicles are required to pass one another while traveling in opposite directions. The amount of disturbance due to hilly terrain conditions is described in Transmission Line and Substation Components – Appendix B.

5.4 New Access Roads

Development of new roads begins with tree removal and grading to create a horizontal and vertical alignment suitable for passage of construction vehicles. These are new roads are generally a minimum of 14 feet wide travel way and 16- to 20-foot-wide road width in turns and may bridge/culvert installation. These roads will require reclamation to pre-construction condition if they are not identified as service roads for future operation and maintenance of the transmission line. The required road disturbance area

and travel way in areas of rolling to hilly terrain will require a wider disturbance to account for cuts and fills, turning radii, and/or where vehicles are required to pass one another while traveling in opposite directions. The amount of disturbance due to hilly terrain conditions is described in Transmission Line and Substation Components – Appendix B.

5.5 Temporary Roads

Roads will be constructed to temporary facilities such as multi-purpose areas and fly yards. They may comprise existing or new roads. In either case these roads will require reclamation to pre-construction condition once construction is complete.

6.0 MITIGATION MEASURES

Protection measures to avoid or reduce impacts associated with access to and from the transmission line are listed in Appendix Z of the POD.

APPENDIX M
FRAMEWORK BLASTING PLAN

Appendix M

Framework Blasting Plan

Gateway West Transmission Line Project

Prepared by:

PacifiCorp
1407 W. North Temple
Salt Lake City, UT 84116

and

Idaho Power Company
1221 West Idaho Street
Boise, ID 83702

January 2013

TABLE OF CONTENTS

1.0 INTRODUCTION M-1
2.0 PURPOSE M-1
3.0 REGULATORY COMPLIANCE AND PROCEDURES M-1
4.0 BLASTING PLAN GUIDANCE M-2
4.1 Overview of Blasting Principles M-2
4.1.1 Locations M-2
4.1.2 Materials M-2
4.2 Blasting Plan Contents M-2
5.0 SAFETY PROCEDURES M-4
5.1 Storage M-4
5.2 Blasting Notification and Safety Procedures M-4
5.3 Fire Safety M-5
5.4 Transportation of Explosives M-5
5.5 Other Specific Stipulations and Methods M-6
6.0 LITERATURE CITED M-6

1.0 INTRODUCTION

Rocky Mountain Power and Idaho Power Company (Companies) are proposing to construct and operate approximately 1,000 miles of new 230-kilovolt (kV), 345-kV and 500-kV alternating current electric transmission system, called the Gateway West Transmission Line Project (Project), consisting of 10 segments between the Windstar Substation at Glenrock, Wyoming, and the Hemingway Substation approximately 30 miles southwest of Boise, Idaho. The proposed transmission line is needed to supplement existing transmission lines in order to relieve operating limitations, increase capacity, and improve reliability in the existing electric transmission grid, allowing for the delivery of up to 1,500 megawatts of additional energy for the Companies' larger service areas and to other interconnected systems. The Project includes ground-disturbing activities associated with the construction of above-ground, single-circuit transmission lines involving towers, access roads, multiuse areas, fly yards, and pulling sites as well as associated substations, communication sites, and electrical supply distribution lines. The Project crosses private land and public lands administered by the Bureau of Land Management (BLM), U.S. Forest Service (Forest Service), and the states of Idaho and Wyoming.

The Framework Blasting Plan outlines methods to mitigate risks and potential impacts associated with blasting procedures that may be required for construction of the Project. This document provides a template for the detailed Final Blasting Plan to be developed by the Construction Contractor.

2.0 PURPOSE

Once completed, the Blasting Plan will provide construction crews, the Compliance Inspection Contractor (CIC), and environmental monitors with project-specific information concerning blasting procedures, including the safe use and storage of explosives. The objective of the Blasting Plan is to prevent adverse impacts to human health and safety, property, and the environment that could potentially result from the use of explosives during project construction.

Blasting may be needed in certain areas with rocky terrain to excavate tower footings, prepare substation pads, and for construction of access roads. Blasting will be used only in areas where traditional excavation and earth moving equipment and practices are unable to accomplish the excavation. In addition, the Construction Contractor may elect to utilize implosive sleeves during line stringing activities to fuse conductor wire together. Areas where blasting will likely occur will be identified based on the geologic setting of the proposed alignment, as identified in the geotechnical investigation for the Project.

3.0 REGULATORY COMPLIANCE AND PROCEDURES

The Blasting Contractor will be responsible for preparing and implementing the Blasting Plan and must comply with all applicable federal, state, and local laws and regulations which pertain to explosives. No blasting operations will be undertaken until approval and

appropriate permits have been obtained from the applicable agencies. Failure to comply with such laws could result in substantial financial penalty and/or imprisonment.

The Construction Contractor will use a qualified, experienced, and licensed Blasting Contractor that will perform blasting using current and professionally accepted methods, products, and procedures to maximize safety during blasting operations. Blasting procedures will be carried out according to, and in compliance with, applicable laws and will be closely monitored by the CIC.

4.0 BLASTING PLAN GUIDANCE

Prior to blasting, the Blasting Contractor shall prepare a Blasting Plan for review and approval by the BLM, CIC, and any other relevant jurisdictional organization (i.e., School and Institutional Trust Lands Administration, county, city), as applicable. The plan will address safety as well as design for production and controlled blasting. The Blasting Plan also will contain the full details of the drilling and blasting patterns, as well as the controls the Blasting Contractor proposes to use for both controlled and production blasting. Review of the plan by the parties shall not relieve the Blasting Contractor of the responsibility for the accuracy and adequacy of the Blasting Plan when implemented in the field. A minimum of two weeks should be allowed for review and approval of the Blasting Plan by the BLM and appropriate agencies. If at any time changes are proposed to the Blasting Plan, the Blasting Contractor shall submit them to the BLM and CIC for review and approval.

4.1 Overview of Blasting Principles

4.1.1 Locations

The Construction Contractor's Blasting Contractor will avoid blasting in potential rockslide/landslide areas to the maximum extent possible and will consult with a geologist before blasting in such areas. A common practice for fusing conductor wire together is the use of implosive sleeves, which utilize explosive materials. The Blasting Contractor will be knowledgeable about this practice and will coordinate with the CIC, particularly with regard to the locations of these practices.

4.1.2 Materials

The Blasting Contractor will determine the specific materials needed for blasting operations. These materials will be included on the hazardous materials list for the Project, and their use and storage will comply with applicable federal, state, and local laws and regulations.

4.2 Blasting Plan Contents

The Blasting Plan prepared by the Blasting Contractor shall contain the following minimum information in the following format:

1. Purpose
2. Scope of the Blasting
3. Definitions
4. Responsibilities
    a. Management Organization

   b. Authority Responsibility
   c. Blaster in Charge (licensed in Wyoming and Idaho)
5. Location of Blasting Area
   a. Description of Blasting Area
   b. Description of Bedrock and Geological Problems
   c. Description of Adjacent Utility Facilities
6. Environmental Considerations
7. Safety Considerations
   a. General
   b. Warning Signs and Signals
   c. Procedures around Adjacent Utility Facilities
   d. Traffic Control
   e. Emergency Blast Initiation
   f. Safety Publications
   g. Fire Prevention
   h. Safety Hazards
   i. Emergency Services and Communication
   j. Minor or Non-Emergency Medical Care
   k. First Aid
8. Risk Management
   a. Protection of Adjacent Utility Facilities
   b. Lightning
   c. Flyrock (Note: Flyrock will be controlled with blasting mats.)
   d. Carbon Monoxide
   e. Ground Vibrations
   f. Seismically Sensitive Receptors
   g. Pre-blast Survey and Inspection
   h. Blast Damage Complaints
   i. Airblast
9. Blast Design Concept
   a. Station limits of proposed shot
   b. Plan and section views of proposed drill pattern, including free face, burden, blasthole spacing, blasthole diameter, blasthole angles, lift height, and sub-drill depth
   c. Loading diagram showing type and amount of explosives, primers, initiators, and location and depth of stemming
   d. Initiation sequence of blastholes, including delay times and delay system
   e. Manufacturers' data sheets for all explosives, primers, and initiators to be employed
10. Procedures
   a. Delivery of Explosives
   b. Storage of Explosives and Blasting Agents
   c. Blast Hole Drilling
   d. General Handling of Explosives
   e. Blast Hole Loading
   f. Notification
   g. Initiation of Blast
   h. Misfire Management

i. Test Blasting
11. Records
12. Attachments

5.0 SAFETY PROCEDURES

Safe storage and use of explosive materials will be a top priority during construction. The safety measures discussed in this section are intended to prevent theft and/or vandalism of the explosive materials, protect against fire, and prevent personal injury and property damage. These measures are intended as general guidelines.

5.1 Storage

Explosives must be stored in an approved structure (magazine) and kept cool, dry, and well-ventilated. The Companies' Construction Contractor will provide the Bureau of Alcohol, Tobacco, Firearms and Explosives (BATF) Cheyenne, Wyoming and Boise, Idaho Fields Offices with a list of dates and locations for the explosives and blasting agent storage facilities to be used on the Project at least 14 days before the establishment of such storage facilities.

At a minimum, the following storage requirements will be implemented:

- Explosives must be stored in an approved structure (magazine), and storage facilities will be bullet-resistant, weather-resistant, theft-resistant, and fire-resistant.
- Magazine sites will be located in remote (out-of-sight) areas with restricted access; kept cool, dry, and well ventilated; and will be properly labeled and signed.
- Detonators will be stored separately from other explosive materials.
- The most stringent spacing between individual magazines will be determined according to the guidelines contained in the BATF publication or state or local explosive storage regulations.
- Both the quantity and duration of temporary on-site explosives storage will be minimized.

The Blasting Contractor will handle and dispose of dynamite storage boxes in accordance with relevant federal, state, and local laws.

5.2 Blasting Notification and Safety Procedures

The Construction Contractor will obtain a permit from the appropriate county as needed, for the period when blasting may occur and will comply with the following requirements developed by the BLM:

- The holder shall publish a proposed blasting schedule in the local newspaper one week prior to any blasting taking place. The schedule shall identify the location, dates, and times blasting will occur. No blasting shall occur outside of the published schedule, except in emergency situations.

- The holder shall post warning signs at all entry points for the Project. Warning signs shall include information on blasting, including the general hours blasting might take place, and audible signals to be used warning of impending blasting and to indicate that the site is all clear.
- Access points to areas where blasting will take place will be blocked to prevent access by the public at least 30 minutes prior to blasting. The site shall be swept 5 minutes prior to blasting to ensure no unauthorized personnel have wandered onto the site. An audible warning signal, capable of carrying for one-half mile, shall be used at least 2 minutes prior to blasting. An “all-clear” signal will be given once it has been determined the area is safe.
- Blasting in the vicinity of pipelines will be coordinated with the pipeline operator and will follow operator-specific procedures, as necessary.
- Damages that result solely from the blasting activity will be repaired or the owner fairly compensated.

A determination of all clear danger will be derived once the blasting area has been inspected for undetonated or misfired explosives. The blasting area will also be inspected for hazards such as falling rock and rock slides. Once the area has been inspected and these issues have been addressed, the all-clear signal as described above will sound and persons will be able to safely re-enter the blast zone.

Additional safety precautions will be developed to address site-specific conditions at the time of the blast. Special attention will be given to preventing potential hazards in the blasting area resulting from flying rock, destabilized walls, structures, presence of low flying aircraft, and dispersion of smoke and gases.

5.3 Fire Safety

The presence of explosive materials on the Project site could potentially increase the risk of fire during construction. Special precautions will be taken to minimize this risk in conjunction with the Framework Fire Prevention and Suppression Plan (Appendix O of the Plan of Development), including but not limited to:

- Prohibiting ignition devices within 50 feet of explosives storage areas.
- Properly maintaining magazine sites so they are clear of fuels and combustible materials, well ventilated, and fire-resistant.
- Protecting magazines from wildfires that could occur in the immediate area.
- Posting fire suppression personnel at the blast site during high fire danger periods.
- Prohibiting blasting during extreme fire danger periods.

5.4 Transportation of Explosives

Transportation of explosives will comply with all applicable federal, state, and local laws, including Title 49 of the Code of Federal Regulations, Chapter III. These regulations are administered by the U.S. Department of Transportation (USDOT) and govern the packaging, labeling, materials compatibility, driver qualifications, and safety of transported explosives. In general, these regulations require vehicles carrying explosive

materials must be well-maintained, properly marked with placards, and have a non-sparking floor. Materials in contact with the explosives will be non-sparking, and the load will be covered with a fire- and water-resistant tarpaulin. Vehicles also must be equipped with fire extinguishers and a copy of the Emergency Response Guidebook (USDOT 2008). Every effort will be made to minimize transportation of explosives through congested or heavily populated areas.

Prior to loading an appropriate vehicle for carrying explosives, the vehicle shall be fully fueled and inspected to ensure its safe operation. Refueling of vehicles carrying explosives shall be avoided. Smoking shall be prohibited during the loading, transporting, or unloading of explosives. In addition, the following specific restrictions apply to transport of other items in vehicles carrying explosives:

- Tools may be carried in the vehicle, but not in the cargo compartment.
- Detonation devices can, in some cases, be carried in the same vehicle as the explosives, but they must be stored in a specially constructed compartment(s).
- Batteries and firearms shall never be carried in a vehicle with explosives.
- Vehicle drivers must comply with the specific laws related to the materials being transported.

Vehicles carrying explosives shall not be parked or left unattended except in designated parking areas with approval of the State Fire Marshall. When traveling, vehicles carrying explosives will avoid congested areas to the maximum extent possible.

5.5 Other Specific Stipulations and Methods

Blasting has the potential to cause environmental impacts. Implementing the protection measures listed Appendix Z of the POD will mitigate these impacts.

Stipulations developed by BLM will be followed for protection of sensitive species as well as the required notification discussed above in Section 5.2. The Construction Contractor will notify the CIC and environmental monitors 72 hours prior to scheduled blasting and comply with the permit requirements for notification by appropriate counties, including any requirements for dust abatement. Regular field meetings will be held with the CIC and environmental monitors to review the process and its implementation. If changes are needed to the notification process, changes will be made to facilitate protection of environmental resources.

6.0 LITERATURE CITED

USDOT (U.S. Department of Transportation). 2008. Emergency Response Guidebook. Available online at http://www.ehso.com/hmerg.php

APPENDIX N
FRAMEWORK DUST CONTROL AND AIR QUALITY PLAN

Appendix N

Framework Dust Control and Air Quality Plan

Gateway West Transmission Line Project

Prepared by:

PacifiCorp
1407 W. North Temple
Salt Lake City, UT 84116

and

Idaho Power Company
1221 West Idaho Street
Boise, ID 83702

January 2013

TABLE OF CONTENTS

1.0 INTRODUCTION N-1
2.0 PURPOSE N-1
3.0 REGULATORY COMPLIANCE N-1
3.1 Federal Permits N-2
3.2 State Permits N-2
3.3 Local Permits N-2
4.0 ENVIRONMENTAL CONSIDERATIONS N-2
4.1 Soil Conservation and Erosion N-2
4.2 Air Quality and Dust Control N-3
5.0 MITIGATION MEASURES N-3
6.0 MONITORING MEASURES N-4
7.0 OPERATION AND MAINTENANCE PHASE N-4

1.0 INTRODUCTION

Rocky Mountain Power and Idaho Power Company (Companies) are proposing to construct and operate approximately 1,000 miles of new 230-kilovolt (kV), 345-kV and 500-kV alternating current electric transmission system, called the Gateway West Transmission Line Project (Project), consisting of 10 segments between the Windstar Substation at Glenrock, Wyoming, and the Hemingway Substation approximately 30 miles southwest of Boise, Idaho. The proposed transmission line is needed to supplement existing transmission lines in order to relieve operating limitations, increase capacity, and improve reliability in the existing electric transmission grid, allowing for the delivery of up to 1,500 megawatts of additional energy for the Companies' larger service areas and to other interconnected systems. The Project includes ground-disturbing activities associated with the construction of above-ground, single-circuit transmission lines involving towers, access roads, multiuse areas, fly yards, and pulling sites as well as associated substations, communication sites, and electrical supply distribution lines. The Project crosses private land and public lands administered by the Bureau of Land Management (BLM), U.S. Forest Service (Forest Service), and the states of Idaho and Wyoming.

This Framework Dust Control and Air Quality Plan addresses regulatory compliance, environmental concerns, mitigation recommendations, and monitoring. This plan will be utilized for the construction of the Project to ensure impacts associated with construction activities are minimized as they relate to soil conservation and air quality.

2.0 PURPOSE

This plan provides measures to be utilized by the BLM, Compliance Inspection Contractor (CIC), and the Construction Contractor to ensure protection of the soils and air quality that will be affected by the Project. This plan is to be implemented during the construction, operation, and maintenance phases of the Project. These measures are intended to 1) address soil erosion and sedimentation, and 2) minimize dust and air emissions from construction-related activities. This document provides a template for the detailed Final Dust Control and Air Quality Plan to be developed by the Construction Contractor.

3.0 REGULATORY COMPLIANCE

Construction, operation, and maintenance activities for the Project are subject to various regulations designed to protect environmental resources and the public from erosion, dust, and other possible effects to air quality. The following permits and documents contain requirements for preventing accelerated erosion and minimizing dust and air emissions. Refer to these documents, along with this plan, when assessing which mitigation measures are appropriate for a specific area. At a minimum, the Companies and the Construction Contractor will need to adhere to or obtain the following permits.

3.1 Federal Permits

- BLM – Right-of-way grant and temporary use permit: Federal Land Policy and Management Act of 1976 (Public Law 94-579); 43 United States Code (U.S.C.) 1761-1771; 43 Code of Federal Regulations (CFR) 2800
- U.S. Army Corps of Engineers (USACE) – Clean Water Act (CWA), Section 401: CWA (33 U.S.C. 1344)
- U.S. Environmental Protection Agency (USEPA) National Pollutant Discharge Elimination System (NPDES) Construction General Permit

3.2 State Permits

- Wyoming Department of Environmental Quality (WDEQ) – Air Quality Division Construction Permit to control fugitive dust emissions during construction.
- WDEQ – Sections 401, 402, and 404, CWA, Water Quality Certification (State implementation of the USACE permits for air quality and stormwater discharges).
- Idaho Department of Environmental Quality (IDEQ) – Fugitive dust control plan for construction projects.
- IDEQ – State implementation of the USACE CWA Section 401, 402, and 404 permits.

3.3 Local Permits

- County conditional use permits, temporary use permits for staging areas, road crossing permits and/or encroachment permits. May have erosion or air quality considerations. Requirements vary by county.

4.0 ENVIRONMENTAL CONSIDERATIONS

4.1 Soil Conservation and Erosion

Soil conservation for the Project includes minimizing impacts that will affect soils from the construction and operation of the proposed transmission line, such as minimizing wind and water erosion, soil compaction, surface disturbance, and construction activities in wet soils. Prior to ground disturbance, geotechnical studies have been conducted and a report for affected areas has been prepared to provide more specific detail/measures regarding soil conservation for the Project.

Erosion potential is the result of several factors including slope, vegetation cover, climate, and the physical and chemical characteristics of the soil. Increased soil erosion may occur when vegetation is removed during construction, or in areas where the surface is disturbed by heavy equipment. Increased water erosion often occurs during high-intensity or long-duration rainstorms and may reduce the productivity of the soil as well as affect water quality of streams by accelerating sediment loading. Wind is also an erosion factor throughout portions of the Project areas. Soil compaction could also be a concern if there is repeated traffic use on sections of access roads.

Where disturbance is anticipated in areas of steep terrain with high potential for erosion; vegetation clearing and grading will be conducted in a manner to minimize these effects. Soil stabilization and reclamation practices will also be implemented to reduce erosion. In select locations, helicopter construction may be used to further reduce these impacts. In areas of soil compaction (e.g., temporary access roads) soil treatment and reclamation will be implemented as directed in Appendix D – Framework Reclamation Plan. In these areas, care should be taken to avoid any installed grounding or counterpoise.

4.2 Air Quality and Dust Control

Construction of the transmission line and related facilities will cause a temporary and minimal increase in fugitive dust. Ambient levels of nitrogen oxides, hydrocarbons, and carbon monoxide near the construction zone will also be temporarily increased due to emissions from heavy construction equipment. Related facilities will cause a minimal increase in fugitive dust.

Air quality control measures are intended to minimize fugitive dust and air emissions and to maintain conditions as free from air pollution where practical. All requirements of those entities having jurisdiction over air quality matters will be adhered to, and any permits needed for construction activities will be obtained. The Construction Contractor will not proceed with any construction activities without taking reasonable precautions to prevent excessive particulate matter from becoming airborne and creating nuisance conditions.

Excessive exhaust emissions from vehicles and heavy equipment will be prevented by proper maintenance, and no open burning of construction trash or other open fires will be allowed.

Where necessary, water or magnesium chloride ($MgCl_2$) may be used as BLM-approved dust control methods during construction, including the grading of roads or the clearing of land and of the right-of-way, and will be applied on unpaved roads, material stockpiles, and other surfaces, which can create airborne dust. Where application of water is not possible, material stockpiles will be enclosed or covered. In addition, open-bodied trucks transporting materials likely to become airborne will be covered. Earth or other materials that may become airborne will promptly be removed from paved roads. Matting will be used in rock blasting operations to minimize and control dust (see Appendix M – Framework Blasting Plan).

5.0 MITIGATION MEASURES

Mitigation measures will be applicable to Project construction, reclamation, operation, and maintenance. If new disturbances occur during the operation and maintenance phases of the Project, or if erosion control and air quality measures implemented during construction and reclamation are not effective in dust control and maintaining air quality, the mitigation measures will be reviewed and modified where necessary.

Because of potential impacts from construction activities, several measures may be necessary to mitigate particular impacts. Proposed erosion, dust control, and air quality

protection measures that will be included in the final Dust Control and Air Quality Plan are included in Appendix Z of the Plan of Development (POD).

6.0 MONITORING MEASURES

Monitoring of erosion control mitigation measures will continue until reclamation efforts are considered complete and successful, and accelerated erosion and air emissions have been controlled. Proposed erosion, dust control, and air quality monitoring measures are included in Appendix Z of the POD.

7.0 OPERATION AND MAINTENANCE PHASE

After construction and reclamation, monitoring the erosion control mitigation measures will continue on an annual basis during the operation and maintenance phase until affected soils have been stabilized. Monitoring should continue until there is no or minimal accelerated erosion or air emissions and until reclamation efforts are considered complete and successful.

APPENDIX O
FRAMEWORK FIRE PREVENTION AND SUPPRESSION PLAN

Appendix O

Framework Fire Prevention and Suppression Plan

Gateway West Transmission Line Project

Prepared by:

PacifiCorp
1407 W. North Temple
Salt Lake City, UT 84116

and

Idaho Power Company
1221 West Idaho Street
Boise, ID 83702

January 2013

TABLE OF CONTENTS

1.0 INTRODUCTION O-1
1.1 Purpose O-1
1.2 Wyoming's Wildfire Protection System O-1
1.3 Idaho's Wildfire Protection System O-2
1.4 Responsibilities and Coordination O-2
2.0 FIRE PREVENTION MEASURES O-3
2.1 Preconstruction and Construction O-3
2.1.1 Training O-3
2.1.2 Smoking O-3
2.1.3 Spark Arresters O-3
2.1.4 Parking, Vehicle Operation, and Storage Areas O-4
2.1.5 Equipment O-4
2.1.6 Road Closures O-4
2.1.7 Refueling O-4
2.1.8 Burning O-4
2.1.9 Flammable Liquids and Explosives O-5
2.1.10 Communications O-5
2.1.11 Welding O-5
2.1.12 Fire Suppression O-5
2.2 Restricted Operations O-5
2.3 Monitoring O-6
3.0 OPERATION AND MAINTENANCE O-6
3.1 Operation O-6
3.2 Maintenance O-6
4.0 NOTIFICATION PROCEDURES O-6

LIST OF TABLES

Table O-1. Fire Suppression Responsibilities in Wyoming O-2
Table O-2. Fire Suppression Responsibilities in Idaho O-2

1.0 INTRODUCTION

Rocky Mountain Power and Idaho Power Company (Companies) are proposing to construct and operate approximately 1,000 miles of new 230-kilovolt (kV), 345-kV and 500-kV alternating current electric transmission system, called the Gateway West Transmission Line Project (Project), consisting of 10 segments between the Windstar Substation at Glenrock, Wyoming, and the Hemingway Substation approximately 30 miles southwest of Boise, Idaho. The proposed transmission line is needed to supplement existing transmission lines in order to relieve operating limitations, increase capacity, and improve reliability in the existing electric transmission grid, allowing for the delivery of up to 1,500 megawatts of additional energy for the Companies' larger service areas and to other interconnected systems. The Project is principally necessary to serve future needs in Utah and Idaho, though other markets may also be served, including Wyoming's oil and gas field electricity needs. The Project includes ground-disturbing activities associated with the construction of above-ground, single-circuit transmission lines involving towers, access roads, multiuse areas, fly yards, and pulling sites as well as associated substations, communication sites, and electrical supply distribution lines. The Project crosses private land and public lands administered by the Bureau of Land Management (BLM), U.S. Forest Service (Forest Service), and the states of Idaho and Wyoming.

This Framework Fire Prevention and Suppression Plan (Plan) describes the framework for measures to be taken by the Companies and their contractors (Contractor) to ensure fire prevention and suppression measures are carried out in accordance with federal, state, and local regulations. Measures identified in this Plan apply to work within the project area defined as the right-of-way (ROW); access roads; all work and storage areas, whether temporary or permanent; and other areas used during construction and operation of the Project. This document provides a template for the detailed Final Fire Prevention and Suppression Plan to be developed by the Construction Contractor.

1.1 Purpose

The risk of fire danger during transmission line construction is related to smoking, refueling activities, operating vehicles and other equipment off roadways, welding activities, and the use of explosive materials and flammable liquids. During operation, the risk of fire is primarily from vehicles and maintenance activities that require welding. Additionally, weather events that affect the transmission line could result in the transmission line igniting a fire.

This Plan establishes standards and practices to minimize risk of fire ignition and, in case of fire, provide for immediate suppression.

1.2 Wyoming's Wildfire Protection System

The prevention and suppression of wildfires in southern Wyoming is carried out by the BLM, Forest Service, and local fire districts and agencies (Table O-1). The agencies' activities are closely coordinated, primarily through the National Interagency Fire Center in Boise, Idaho, and Regional Interagency Dispatch Centers in Casper, Wyoming, and Rawlins, Wyoming. Individual fire crews from BLM field offices and Forest Service Ranger Districts coordinate fire suppression activities on federal land within their

jurisdictions. The Wyoming State Forestry Division (WSFD) is responsible for fire suppression on Wyoming state land. Local fire districts and agencies provide fire prevention and suppression activities on private land, and may assist with fires on state or federal lands as requested by those agencies.

Table O-1. Fire Suppression Responsibilities in Wyoming

Who	Where	Miles of Proposed Route
Bureau of Land Management	National System of Public Lands	204
U.S. Forest Service	National Forest (NF) and National Grasslands	7
Bureau of Reclamation	Bureau of Reclamation Lands	3
Wyoming State Forestry Division	Wyoming State Lands	66
City fire departments and rural fire protection districts in mutual aid with WSFD	Structures in Wyoming's wildland interface areas covered by mutual-aid agreements.	256

Source: GIS Ownership_Analysis_20111219.xlsx.

1.3 Idaho's Wildfire Protection System

Wildland fire suppression in Idaho operates much the same way as described for Wyoming (Table O-2). Wildland fire suppression and fire-management activities in Idaho are organized through the National Interagency Fire Center in Boise, Idaho, and locally on federal land by individual BLM field offices or Forest Service Ranger Districts. Various mutual-aid agreements with community fire departments and the Idaho Department of Lands (IDL) are in force throughout the Project area.

Table O-2. Fire Suppression Responsibilities in Idaho

Who	Where	Miles of Proposed Route
Idaho Department of Lands	State-owned lands	30
Bureau of Land Management	National System of Public Lands	276
Bureau of Reclamation	Bureau of Reclamation Lands	2
U.S. Forest Service	National Forest (NF)	9
City fire departments and rural fire protection districts	Private lands	250

Source: GIS Ownership_Analysis_20111219.xlsx.

1.4 Responsibilities and Coordination

This Plan will be implemented by the Companies and the Contractor on the Project. The Companies and the Contractor are responsible for providing all necessary fire-fighting equipment on the project site to their respective employees and operating under the requirements of this Plan. Prior to construction, the Companies will contact the appropriate fire-control authorities to establish communications, obtain any required permits (such as burning or fire waiver permits prior to conducting any heavy equipment or burning activities), and/or fulfill other obligations as directed by fire-control authorities.

The Companies will also do the following:

- Ensure prevention, detection, pre-suppression, and suppression activities are in accordance with this Plan and federal, state, and county laws; ordinances; and regulations pertaining to fire.
- Accompany agency representatives on fire tool and equipment inspections and take corrective action upon notification of any fire-protection requirements not in compliance.
- Restrict operations on federal lands during conditions of high fire danger as described in Section 2.2, Restricted Operations.

The fire prevention and suppression measures described in this Plan will be in effect from pre-construction to the end of restoration. These restrictions may change by advance written notice by fire-control authorities. However, required tools and equipment will be kept in serviceable condition and will be immediately available at all times.

2.0 FIRE PREVENTION MEASURES

2.1 Preconstruction and Construction

Methods and procedures to be implemented prior to and during construction, operation, maintenance, and termination of the Project to minimize the risk of fire are described in the following sections.

2.1.1 Training

The Contractor will train all personnel on the measures to take in the event of a fire. The Contractor will also inform each construction crew member of fire dangers, locations of extinguishers and equipment, and individual responsibilities for fire prevention and suppression during regular safety briefings. Smoking and fire rules also will be discussed with the Contractor and all field personnel during the Project's environmental training.

2.1.2 Smoking

Smoking is never permitted in any area designated by DANGER or NO SMOKING signs. Smoking is not permitted in these areas regardless of any other factor. Smoking is only permitted on access roads, within vehicles, and in approved smoking areas.

2.1.3 Spark Arresters

During construction, operation, maintenance, and decommissioning of the ROW, all equipment operating with an internal combustion engine will be equipped with federally-approved spark arresters. Spark arresters are not required on trucks, buses, and passenger vehicles (excluding motorcycles) equipped with an unaltered muffler or on diesel engines equipped with a turbocharger. Agency fire-inspection officers will have full authority to inspect spark arresters on Project equipment prior to its use on the Project on federal lands and periodically during construction.

2.1.4 Parking, Vehicle Operation, and Storage Areas

In no case will motorized equipment, including worker transportation vehicles, be driven or parked outside the designated and approved work limits. Equipment parking areas, the ROW, staging areas, designated vehicle-parking areas, and small stationary engine sites—where permitted—will be cleared of all flammable material. Clearing will extend a minimum of 2 feet beyond the edge of the area to be occupied but not beyond the boundaries of the approved ROW, extra workspace, or ancillary site. Glass containers will not be used to store gasoline or other flammables.

2.1.5 Equipment

All motor vehicles and equipment will carry at least 1 long-handled (48-inch minimum), round-point shovel; a double-bit ax or Pulaski (3.5 pounds or larger); and one dry chemical fire extinguisher (with an Underwriters Laboratories [UL] rating of at least 5B or C). Individuals using power saws and grinders will have a shovel as described above, and an 8-ounce capacity fire extinguisher immediately available. All equipment will be kept in a serviceable condition and readily available.

The Contractor shall maintain a list, to be provided to local fire-protection agencies, of all equipment that is either specifically designed for, or capable of, being adapted to fighting fires. The Contractor shall provide basic fire-fighting equipment on-site during construction, including fire extinguishers, shovels, axes, and other tools in sufficient numbers so each employee on-site can assist in the event of a fire-fighting operation.

2.1.6 Road Closures

The Contractor will notify the appropriate fire-suppression agency of the scheduled closures prior to the open-cut crossing of a road. If required, the Contractor will construct a bypass prior to the open-cut installation of a road crossing, unless a convenient detour can be established on existing project-approved roads or within project-approved work limits. All bypasses will be clearly marked by the Contractor. During road closures, the Contractor will designate one person who knows the bypass to direct traffic. The Contractor will minimize, to the extent possible, the duration of road closures.

2.1.7 Refueling

Fuel trucks will have a large fire extinguisher charged with the appropriate chemical to control electrical and gas fires. The extinguisher will be a minimum size 35-pound capacity with a minimum 30 BC rating. Power-saw refueling will be done in an area that has first been cleared of material that could catch fire.

2.1.8 Burning

Contractor and Companies' personnel are prohibited from burning slash, brush, stumps, trash, explosives storage boxes, or other Project debris unless specifically contracted to do so.

2.1.9 Flammable Liquids and Explosives

The handling and use of explosives shall be conducted in strict conformance with all local, state, and federal regulations as detailed in the Companies' Construction Specification on Blasting.

2.1.10 Communications

The Contractor will be responsible for maintaining contact with fire-control agencies and will be equipped with a radio or cellular telephone so immediate contact with local fire-control agencies can be made. If cellular telephone coverage is not available, the Contractor will use the radio to contact their base, who will telephone emergency dispatch.

2.1.11 Welding

One 5-gallon backpack pump will be required with each welding unit in addition to the standard fire equipment required in all vehicles. All equipment will be kept in a serviceable condition and readily available.

2.1.12 Fire Suppression

The Contractor will take the following actions should a fire occur within the Project area during construction:

- Take immediate action to suppress fires using all available manpower and equipment.
- Immediately notify the nearest fire-suppression agency of the fire location, action taken, and status (see Section 4.0).
- Immediately notify the Companies of the fire location and action taken.
- Relinquish fire-suppression activities to agency fire-management officers upon their arrival.

If a reported fire is controlled, the Contractor will note the location and monitor the progress in extinguishing the fire. A Contractor's employee will remain at the fire scene until it is fully extinguished. The extinguished fire will be monitored in accordance with procedures described in Section 2.3 of this document.

2.2 Restricted Operations

The Contractor will restrict or cease operations in specified locations during periods of high fire danger at the direction of the land-management agency's closure order. Restrictions may vary from stopping certain operations at a given time to stopping all operations. The Companies may obtain approval to continue some or all operations if acceptable precautions are implemented. A written waiver must be issued to the Contractor.

During periods of high fire danger, the Contractor will monitor daily for local restrictions. It is the Contractor's responsibility to ensure personnel are aware of and following area fire orders.

2.3 Monitoring

The contractor will be responsible for compliance with all provisions of this Plan. In addition, federal, state, and local fire-control agencies may perform inspections in areas under their jurisdiction at their discretion.

To help reduce the potential for fire starts during construction of the Project, the Companies will implement or require the construction Contractor to implement the environmental protection measures (EPMs) contained in Appendix Z of the Plan of Development currently being discussed with the Agencies. When these discussions are completed, finalized measures will be listed herein.

3.0 OPERATION AND MAINTENANCE

3.1 Operation

During transmission line operation, the risk of fire danger is minimal. The primary causes of fire on the ROW result from unauthorized entry by individuals for recreational purposes and from fires started outside the ROW. In the latter case, authorities can use the ROW as a potential firebreak. During transmission line operation, access to the ROW will be restricted in accordance with jurisdictional agency or landowner requirements to minimize recreational use of the ROW.

3.2 Maintenance

During maintenance operations, the Companies or their Contractor will equip personnel with basic fire-fighting equipment, including fire extinguishers and shovels as described in Section 2.1.5, Equipment. Maintenance crews will also carry emergency response/fire control phone numbers.

To help reduce the potential for fire starts during the operation and maintenance of the Project, the Companies or their Contractor will implement the finalized EPMs.

4.0 NOTIFICATION PROCEDURES

Construction crew members will report all fires, whether extinguished or controlled. If the fire is uncontrolled, the Contractor will call the nearest fire-suppression agency (911) and the Companies' lead environmental inspector. Information regarding the location of the fire, property ownership, and closest access roads should be reported to 911 and the Companies.

If a reported fire is controlled but not extinguished, the fire guard will call to notify the nearest police/fire authorities using the non-emergency telephone line to alert them of the situation. The status of the fire will be monitored by the Contractor, and the nearest fire-suppression agency will be notified.

The Companies will maintain and provide the Contractor with an up-to-date list of landowner and land management agency contacts along the transmission line ROW.

To assist with the notification and reporting of fires, the Companies or their Contractor will implement the finalized EPMs.

APPENDIX P
FRAMEWORK HAZARDOUS MATERIAL MANAGEMENT PLAN

Appendix P

Framework Hazardous Material Management Plan

Gateway West Transmission Line Project

Prepared by:

PacifiCorp
1407 W. North Temple
Salt Lake City, UT 84116

and

Idaho Power Company
1221 West Idaho Street
Boise, ID 83702

January 2013

TABLE OF CONTENTS

1.0 INTRODUCTION.....P-1
2.0 PURPOSE.....P-2
3.0 REGULATORY COMPLIANCE.....P-2
4.0 FRAMEWORK E HAZARDOUS MATERIALS MANAGEMENT PLAN.....P-5
4.1 Certifications, Acknowledgments, and Designation of Coordinator/ Responsible Person.....P-5
4.1.1 Certifications.....P-5
4.1.2 Amendments.....P-5
4.1.3 Coordinator/Responsible Person.....P-6
4.2 Facilities Description and Inventory of Materials.....P-6
4.2.1 Site Maps.....P-6
4.2.2 Inventory.....P-6
5.0 SPILL PREVENTION PROCEDURES.....P-7
5.1 Overview of Hazardous Materials Proposed for Use.....P-7
5.2 Refueling and Servicing.....P-7
5.3 Transportation of Hazardous Materials.....P-8
5.4 Storage of Hazardous Materials.....P-8
5.4.1 Physical Storage Requirements.....P-9
5.4.2 Container Labeling Requirements.....P-9
5.5 Disposal of Hazardous Wastes.....P-10
5.6 Contaminated Containers.....P-10
5.7 Waste Oil Filters.....P-11
5.8 Used Lubricating Oil.....P-11
6.0 MITIGATION MEASURES.....P-12

LIST OF FIGURES

Figure P-1. Sample Hazardous Waste Label for On-Site Storage.....P-10

LIST OF ATTACHMENTS

Attachment A Sample Hazardous Materials Management Plan Framework Forms

1.0 INTRODUCTION

Rocky Mountain Power and Idaho Power Company (Companies) are proposing to construct and operate approximately 1,100 miles of new 230-kilovolt (kV), 345-kV and 500-kV alternating current (AC) electric transmission system, called the Gateway West Transmission Line Project (Project), consisting of 10 segments between the Windstar Substation at Glenrock, Wyoming, and the Hemingway Substation approximately 30 miles southwest of Boise, Idaho. The proposed transmission line is needed to supplement existing transmission lines in order to relieve operating limitations, increase capacity, and improve reliability in the existing electric transmission grid, allowing for the delivery of up to 1,500 megawatts (MW) of additional energy for the Companies' larger service areas and to other interconnected systems. The Project is principally necessary to serve future needs in Utah and Idaho, though other markets may also be served, including Wyoming's oil and gas field electricity needs. The Project includes ground-disturbing activities associated with the construction of above-ground, single-circuit transmission lines involving towers, access roads, multiuse areas, fly yards, and pulling sites as well as associated substations, communication sites, and electrical supply distribution lines. The Project crosses private land and public lands administered by the Bureau of Land Management (BLM), U.S. Forest Service, and the states of Idaho and Wyoming.

This Framework Hazardous Material Management Plan for the Project is intended to reduce the risks associated with the use, storage, transportation, production, and disposal of hazardous materials (including hazardous substances and wastes). This Plan will identify Project-specific mitigation measures and other specific stipulations and methods to address spill prevention, response, and cleanup procedures for the Project. This document provides a template for the development of a detailed Hazardous Material Management Plan to be developed by the Construction Contractor.

In conjunction with the Hazardous Material Management Plan, a Spill Prevention, Containment, and Countermeasures (SPCC) Plan will be developed to identify specific legal requirements and practices to achieve identified goals. Refer to Appendix G – Framework Spill Prevention, Containment, and Countermeasures Plan of the Plan of Development (POD) for more information.

The term "hazardous material," as presented in this framework plan, will refer to hazardous substances, hazardous wastes, marine pollutants, elevated temperature materials, and materials designated as hazardous for transportation as defined in 49 Code of Federal Regulations (CFR) 171.8.

The Hazardous Material Management Plan will clearly identify which legal requirements apply to specific types of hazardous materials and will identify best management practices that, although not legally required, will be followed to reduce risks associated with hazardous materials. Nothing in this framework plan or in the Hazardous Material Management Plan (to be developed by the Construction Contractor) shall be construed as an admission regarding the legal applicability of requirements or practices to any particular class of hazardous material.

2.0 PURPOSE

The goal of this framework plan is to 1) minimize the potential for a spill of fuel or other hazardous material, 2) contain any spill to the smallest possible area, 3) protect areas that are environmentally sensitive, and 4) provide a template for the development of a detailed Hazardous Material Management Plan (by the Construction Contractor). This plan framework includes the following components:

- Framework for developing the Hazardous Material Management Plan.
- Spill control, response, and cleanup methods.
- An overview of the notification and documentation procedures to be followed in the event of a spill.
- Operation and maintenance considerations.

In addition, sample hazardous materials management forms (which may be used as examples by the Construction Contractor) are provided in Attachment A.

In general, hazardous materials, hazardous wastes, and cleanup equipment will be stored in approved containers until they can be properly transported and disposed of at an approved treatment, storage, and disposal facility. Persons responsible for handling or transporting hazardous materials for the Project will be trained in the proper use/management of the materials and should be familiar with all applicable laws, policies, procedures, and mitigation measures related to such handling or transportation.

It is the responsibility of the Construction Contractor to maintain file records of proper training/certification for any individual(s) who may potentially handle hazardous materials for the Project. The Companies reserve the right to audit any subcontractors to ensure compliance.

3.0 REGULATORY COMPLIANCE

Major legislation pertaining to hazardous materials includes the Comprehensive Environmental Response, Compensation, and Liability Act (CERCLA), Resource Conservation and Recovery Act, Clean Air Act, and Clean Water Act.

Numerous other federal, state, and local regulations also govern the use, storage, transportation, production, and disposal of hazardous materials. Some of the key requirements of these laws are outlined in:

Occupational Safety and Health Administration (OSHA) (29 CFR 1900-1910)

- 28 CFR 1900-1910 Occupational Safety and Health Act
- 29 CFR 1904 Recording and Reporting Occupational Injuries and Illness
- 29 CFR 1910.120 Hazard Communication
- 29 CFR 1926 Safety and Health Regulations for Construction

Clean Water Act (40 CFR 100-149)

- 40 CFR 110 Discharges of Oil
- 40 CFR 112 Oil Pollution Prevention
- 40 CFR 116 Designation of Hazardous Substances
- 40 CFR 117 Determination of Reportable Quantities for Hazardous Substances
- 40 CFR 129 Toxic Pollutant Effluent Standards
- 40 CFR 131 Water Quality Standards
- 40 CFR 141-149 Safe Drinking Water Act

Clean Air Act (40 CFR 50-99)

- 40 CFR 50 National Ambient Air Quality Standards
- 40 CFR 61-63 National Emissions Standards for Hazardous Air Pollutants

Toxic Substances Control Act (TSCA) (40 CFR 700-799)

- 40 CFR 710 TSCA Chemical Inventory Regulations
- 40 CFR 761 PCBs Manufacturing, Processing, Distribution in Commerce, and Use Prohibitions

CERCLA/Superfund Amendments and Reauthorization Act (40 CFR 300-399)

- 40 CFR 300 National Oil and Hazardous Substances Pollution Contingency Plan
- 40 CFR 302 Designation, Reportable Quantities, and Notification
- 40 CFR 355 Emergency Planning and Notification
- 40 CFR 370 Hazardous Chemical Reporting: Community Right-to-Know
- 40 CFR 372 Toxic Chemical Release Reporting: Community Right-to-Know

Solid and Hazardous Wastes (40 CFR 239-299)

- 70 CFR 201-211 Noise Abatement Programs
- 40 CFR 243 Guidelines for the Storage and Collection of Residential, Commercial, and Institutional Solid Waste
- 40 CFR 260 Hazardous Waste Management System: General
- 40 CFR 261 Identification and Listing of Hazardous Waste
- 40 CFR 262 Standards Applicable to Generators of Hazardous Waste
- 40 CFR 263 Standards Applicable to Transporters of Hazardous Waste
- 40 CFR 273 Standards for Universal Waste Management
- 40 CFR 279 Standards for the Management of Used Oil

Hazardous Materials Transportation Act (49 CFR 100-199)

- 49 CFR 130 Oil Spill Prevention and Response Plans

- 49 CFR 171 General Information, Regulations, and Definitions
- 49 CFR 172 Hazardous Materials Table, Special Provisions, Hazardous Materials Communications, Emergency Response Information, and Training Requirements
- 49 CFR 177 Carriage by Public Highway

Wyoming-Specific Regulations

- Wyoming Department of Environmental Quality (WDEQ) Wyoming Air Quality Standards and Regulations (WAQSR) Chapter 1 Wyoming Environmental Quality Act
- WAQSR Chapter 2 Ambient Standards
- WAQSR Chapter 3 General Emissions Standards
- WAQSR Chapter 6 Permitting Requirements
- WAQSR Chapter 7 Monitoring Requirements
- WAQSR Chapter 8 Non-attainment Area Regulations
- WAQSR Chapter 9 Visibility Impairment/PM Fine Controls
- WAQSR Chapter 13 Mobile Sources
- WDEQ Water Quality Standards (WQS) Chapter 1 Surface Water Quality Standards
- WQS Chapter 4 Regulations for Release of Oil and Hazardous Substances into Waters of the State
- WQS Chapter 8 Quality Standards for Wyoming Groundwater
- WQS Chapter 9 Wyoming Groundwater Pollution Control Permit
- WDEQ Solid and Hazardous Waste Division (SHWD) Hazardous Waste Permitting and Corrective Action
- SHWD Voluntary Remediation
- SHWD Inspection and Compliance
- SHWD Storage Tank Program

Idaho-Specific Regulations

- Idaho Department of Environmental Quality (IDEQ) Idaho Administrative Procedures Act (IDAPA) IDAPA 58.01.01 Rules for the Control of Air Pollution in Idaho
- IDAPA 58.01.02 Water Quality Standards
- IDAPA 58.01.05 Rules and Standards for Hazardous Waste
- IDAPA 58.01.11 Ground Water Quality Rule
- IDAPA 58.01.18 Land Remediation Rules

- IDAPA 58.01.24 Standards and Procedure for Application of Risk Based Corrective Action at Petroleum Release Sites

4.0 FRAMEWORK E HAZARDOUS MATERIALS MANAGEMENT PLAN

The following sections provide specific methods for the Construction Contractor to prepare the Hazardous Materials Management Plan and the SPCC Plan (refer to Appendix G of the POD for more information), if applicable, per 40 CFR 112. The Construction Contractor shall provide all information requested in the forms at the end of this appendix to the Companies. In addition, the Contractor shall complete any other required county, state, or federal forms.

4.1 Certifications, Acknowledgments, and Designation of Coordinator/ Responsible Person

4.1.1 Certifications

The Construction Contractor shall certify all of the information provided in the Hazardous Materials Management Plan is accurate and complete to the best of their knowledge. The Construction Contractor also will certify they are committed to implementing the plan as written. If an SPCC plan is required, per the requirements of 40 CFR 112, the Construction Contractor additionally may be required to have the plan reviewed and certified by a registered professional engineer.

4.1.2 Amendments

The Construction Contractor shall agree to make all necessary and appropriate amendments to the Hazardous Materials Management Plan and submit any and all such amendments to the Companies and the appropriate county (if required), state, or federal authorities within seven (7) days of finding that an amendment is necessary.

Amendments to the Hazardous Materials Management Plan shall be necessary under any of the following circumstances:

- Applicable laws or regulations are revised.
- A 100 percent or more increase of a previously disclosed hazardous material.
- Any handling of a previously undisclosed hazardous material subject to inventory requirements.
- A change in properties of a previously disclosed hazardous material (e.g. solid to liquid).
- A change of business address, name or ownership.
- The list of emergency coordinators changes.
- The list of emergency equipment changes.

The Construction Contractor may be required to amend any SPCC plan, as required by the applicable regulations.

4.1.3 Coordinator/Responsible Person

The Construction Contractor shall identify an emergency coordinator/responsible person for hazardous materials management and emergency response. Two alternates shall also be identified. Business, residential, and mobile phone or pager numbers shall be provided for all three persons to allow for contact on a 24-hour basis. Primary and alternate emergency response coordinators shall be knowledgeable of the chemicals and processes involved in construction of the Project, and will have the authority to commit Construction Contractor resources to implement the plan. They also shall have stop-work authority in case of non-compliance or danger to human health or the environment.

4.2 Facilities Description and Inventory of Materials

4.2.1 Site Maps

The Construction Contractor will provide site maps or facility maps in the Hazardous Materials Management Plan that contain storage and safety precautions for each location containing hazardous materials and hazardous wastes. Maps shall, at a minimum, include the following information:

- Orientation and scale
- Total land area in square feet
- Access and egress points
- Buildings and/or temporary trailers
- Parking areas
- Adjacent land uses (if business, indicate business name)
- Surrounding roads, storm drains, and waterways (including streams and wetlands)
- Locations of hazardous materials and hazardous waste storage areas
- Underground and above ground storage tanks
- Containment or diversion structures (dikes, berms, retention ponds)
- Shutoff valves and/or circuit breakers
- Location of emergency response materials and equipment
- Location of material safety data sheets (MSDS), the Hazardous Materials Management Plan, and the SPCC Plan
- Location of emergency assembly area

4.2.2 Inventory

The Construction Contractor shall provide a complete inventory of all hazardous materials. The Construction Contractor shall be responsible for consulting with the relevant agencies if they handle extremely hazardous substances. All inventory forms shall be provided to the Construction Contractor by the Companies as a part of the Hazardous Materials Management Plan.

5.0 SPILL PREVENTION PROCEDURES

Construction, operation, and maintenance of the Project will require the use of certain potentially hazardous materials, such as fuels, oils, explosives, and herbicides. By definition, hazardous materials (substances and wastes) have the potential to pose a significant threat to human health and the environment based upon their quantity, concentration, or chemical composition. When stored, used, transported, and disposed of properly, as described below, the risks associated with these materials can be reduced substantially.

5.1 Overview of Hazardous Materials Proposed for Use

The following measures pertain to all vehicle refueling and servicing activities, as well as the storage, transportation, production, and disposal of hazardous materials/wastes. These measures are intended to prevent the discharge of fuels, oils, gasoline, and other harmful substances to waterways, groundwater aquifers, and/or other sensitive resource areas during Project construction and maintenance.

Hazardous materials used during Project construction may include petroleum products such as gasoline, diesel fuel, and hydraulic fluid; lubricating oils and solvents; cleansers; explosives; and other substances. Some of these materials will be used in relatively large quantities at material yards and in rare instances on the right-of-way to operate and maintain equipment during construction. Explosives will be used for blasting rock where needed to install transmission towers and associated access roads (refer to Appendix M – Framework Blasting Plan).

Smaller quantities of other materials such as pesticides and fertilizers, paints, and chemicals (e.g., sulfur hexafluoride) may be used during Project operation and maintenance. Pesticides and herbicides are hazardous materials and they will be used according to labeling (see also Appendix E – Framework Noxious Weed Plan). The Construction Contractor will maintain an inventory of all hazardous materials used and MSDS for all materials. The Construction Contractor shall maintain copies of the required MSDS for each hazardous chemical and shall ensure the copies are readily accessible during each work shift to all employees when they are in their work area(s). The MSDS will provide basic emergency response information for small and large releases of the hazardous materials. In the case that bulk hazardous materials are used, the Emergency Response Guidebook, produced by the U.S. Department of Transportation (USDOT), is an acceptable reference. The Construction Contractor should have a well-developed hazardous material program in place and work to use non-hazardous substances in routine construction and maintenance activities, to the extent possible.

5.2 Refueling and Servicing

Construction vehicles (trucks, bulldozers, etc.), helicopters, and equipment (pumps, generators, etc.) generally will be fueled and serviced in designated areas at least 100 feet from streams (including intermittent and perennial) and wetlands (including dry or seasonal wetlands). Refueling locations generally should be flat to minimize the chance of a spilled substance reaching a stream. In most cases, smaller rubber-tired vehicles will be refueled and serviced at local gas stations or material yards. Tracked vehicles

typically will be refueled and serviced on site. In some cases, pickup trucks or tankers will be used to refuel and service construction vehicles on the right-of-way. Every effort will be made to minimize the threat of a fuel spill during refueling and servicing. Fuel/service vehicles will carry a suitable absorbent material to collect approximately 20 gallons of spilled materials. In addition, all vehicles will be inspected for leaks prior to being brought on-site and regularly throughout the construction period.

Washing of construction vehicles, such as concrete trucks, will be allowed only in designated areas at least 100 feet from streams and wetlands (as defined above). Washing areas will be contained with berms/barriers to prevent migration of wastewater and/or sediments into streams and waterways. Waste concrete material will be removed and properly disposed of once it has hardened. Additionally, all preventive measures, identified in Appendix E – Framework Noxious Weed Plan, will be followed, specifically relating to vehicle washing procedures.

5.3 Transportation of Hazardous Materials

Procedures for loading and transporting fuels and other hazardous materials will meet the minimum requirements established by the USDOT, Wyoming Department of Transportation, Idaho Transportation Department, and other pertinent regulations. Prior to transporting hazardous materials, appropriate shipping papers shall be completed. Transportation of hazardous materials should be performed by a hazardous material transport firm in accordance with USDOT regulations. In addition, the Construction Contractor(s) will ensure all handling or packaging of hazardous materials and all paperwork for transport of hazardous materials is performed by properly trained personnel in accordance with USDOT and applicable state regulations.

At all times, all hazardous materials used for the Project will be properly stored in approved containers and labeled, including during transportation. Smaller containers will be used on-site to transport needed amounts of hazardous materials to a specific location. Transfer of materials from large to small containers will be performed using appropriate equipment, including pumps, hoses, and safety equipment; hand pouring techniques will not be utilized. These smaller (service) containers also will be clearly labeled. Special provisions apply to the transportation of explosives (refer to Appendix M – Framework Blasting Plan).

5.4 Storage of Hazardous Materials

Hazardous materials will be stored only in designated material yards. Material yards will be located at least 100 feet from the edge of perennial and intermittent streams, wetlands (including dry or seasonal wetlands), and sensitive areas and will be able to contain the single largest quantity/unit stored at any one time, plus 10 percent. If material yards cannot be located at least 100 feet from streams and wetlands because of topographic conditions or space limitations, special precautions will be taken to prevent the spill or release of hazardous materials into the waterway. These precautions will include limiting the quantity and amount of time such materials are stored near waterways, fortifying barriers, providing additional containment between hazardous materials and the waterway, and using trained personnel to monitor activities at the yard. Cleanup materials, including absorbent spill pads and plastic bags, will also be stored in these areas. The Construction Contractor will specify the appropriate spill kit

containing these materials in the Hazardous Materials Management Plan. Hazardous materials will not be stored in areas subject to flooding or inundation. The Construction Contractor shall coordinate with the Compliance Inspection Contractor when storage areas cannot be located at least 100 feet from streams and wetlands.

5.4.1 Physical Storage Requirements

Storage Containers: Containers holding hazardous waste or materials will be compatible with the wastes or materials stored. If the container is damaged or leaks, the waste must be transferred to a container in good condition. The Construction Contractor shall inspect containers weekly at a minimum to verify the integrity of the containers and any containment systems. Containers used for transportation must comply with USDOT and applicable state transportation requirements.

Incompatible Materials: Materials, including hazardous wastes, will not be placed in containers that previously held an incompatible waste or material.

Ignitable or Reactive Materials: Containers holding hazardous wastes or materials that are reactive or may ignite must be located at least 50 feet from the material yard's property line. "NO SMOKING" signs shall be conspicuously placed wherever there is a hazard from ignitable or reactive material.

Container Management: Containers holding hazardous wastes will be kept closed at all times, except when it is necessary to add or remove contents. Before the handling and/or transportation of containers carrying hazardous wastes, the containers should be inspected to ensure they are sealed such that no material spillage occurs.

Secondary Containment: Secondary containment will consist of bermed or diked areas that are lined and capable of holding 110 percent of the volume of the stored material and will be provided for liquid hazardous materials stored on-site.

Security: Hazardous wastes and materials will be stored in secure areas to prevent damage, vandalism, or theft. All storage containers will remain sealed when not in use and storage areas shall be secured (gated, locked, and/or guarded) at night and/or during non-construction periods.

Explosives: Storage of explosives is discussed in Appendix M – Blasting Plan Framework.

5.4.2 Container Labeling Requirements

The Construction Contractor(s) shall comply with the following labeling requirements for any container (including tanks) used on-site to store accumulated hazardous wastes. Figure P-1 shows an example of a hazardous waste label for on-site storage. The containers shall be labeled with the information below and as required in 40 CFR 262:

- The accumulation start date and/or the date the 90-day storage period began.
- The words: "Hazardous Waste".
- The composition and physical state of the waste.
- Warning words indicating the particular hazards of the waste, such as flammable, corrosive, reactive or toxic.
- The name and address of the facility that generated the waste.

HAZARDOUS WASTE
Contents: _____
Physical State (gas, liquid, solid): _____
Accumulation Start Date: _____
Hazards: _____
Name and Address of Generator: _____
_____
_____
Contact Person: _____
Telephone: _____
HANDLE WITH CARE!
CONTAINS HAZARDOUS OR TOXIC WASTES

Figure P-1. Sample Hazardous Waste Label for On-Site Storage

5.5 Disposal of Hazardous Wastes

Hazardous wastes will be collected regularly and disposed of in accordance with all applicable laws and regulations. The Construction Contractor shall determine details on the proper handling and disposal of hazardous waste and shall assign responsibility to specific individuals prior to construction of the Project.

Every effort will be made to minimize the production of hazardous waste during the Project, including, but not limited to, minimizing the amount of hazardous materials needed for the Project; using alternative non-hazardous substances when available; recycling usable material such as oils, paints, and batteries to the maximum extent; and filtering and reusing solvents and thinners whenever possible.

Any generator of hazardous waste must apply for a U.S. Environmental Protection Agency Identification (ID) Number. The ID number is needed to complete the Uniform Hazardous Waste Manifest to ship wastes off-site. A generator can accumulate hazardous wastes on-site for a period of up to 90 days without having to obtain a permit as a storage facility.

5.6 Contaminated Containers

Containers that once held hazardous materials as products or held hazardous wastes must be considered as potential hazardous wastes due to the possible presence of residual hazardous material. Regulations specify certain requirements, listed below, for the container to be handled as a non-hazardous waste.

- The containers must be empty, which means as much of the contents have been removed as possible using the practices commonly employed to remove materials from that type of container (e.g., pouring, pumping, and aspirating) so none will pour out in any orientation.
- A container that held compressed gas is empty when the pressure in the container approaches atmospheric.

- If empty containers are less than five gallons, they may be disposed of as a non-hazardous solid waste or scrapped.
- If empty containers are less than five gallons, they may be disposed of as a non-hazardous solid waste or scrapped.
- If the empty containers are greater than five gallons, they must be handled in the following manner: 1) returned to the vendor for re-use, 2) sent to a drum recycler for reconditioning, or 3) used or recycled on-site.
- All these actions must occur within one year of the container being emptied.

5.7 Waste Oil Filters

Used metal canister oil filters can be managed as non-hazardous wastes if:

- They are thoroughly drained of “free flowing” oil (oil exiting drop-by-drop is not considered “free flowing”).
- The filters are accumulated, stored, and transferred in a closed, rainproof container.
- The filters are transferred for the purposes of recycling.
- The filters are not terne-plated (an alloy of tin and lead).

Terne-plated oil filters are a hazardous waste, exhibiting the hazardous characteristic of lead. Terne-plated oil filters not recycled must be managed as a hazardous waste.

5.8 Used Lubricating Oil

Lubrication oil is considered a used oil, as listed below:

- Any oil that has been refined from crude oil and as a result of use has been contaminated with physical or chemical impurities.
- Any oil that has been refined from crude oil and, as a consequence of extended storage, spillage, or contamination with non-hazardous impurities such as dirt, rags, and water, is no longer useful to the original purchaser.
- Spent lubricating fluids that have been removed from a truck, heavy equipment, automobile, or bus.

Used oil may be a hazardous waste if:

- The concentrations of polychlorinated biphenyls (PCB) exceed 50 parts per million (ppm).
- Total halogens exceed 1,000 ppm.
- Mixed with a hazardous waste.

Used oil not being burned or recycled must be managed as a hazardous waste unless it is determined to be non-hazardous through laboratory analysis.

6.0 MITIGATION MEASURES

Standard mitigation measures, applied Project-wide, will address many of the concerns associated with hazardous substances and have been developed in accordance with the BLM standards. The mitigation measures for storage, handling, transport, use, and disposal of hazardous materials and wastes are presented in Appendix Z of the Plan of Development.

ATTACHMENT A
SAMPLE HAZARDOUS MATERIALS MANAGEMENT PLAN FRAMEWORK FORMS

CERTIFICATIONS, ACKNOWLEDGMENTS, AND DESIGNATION OF EMERGENCY COORDINATOR

The Construction Contractor(s) responsible for managing the material yards shall complete and submit the following information:

GENERAL INFORMATION

Business Name

Facility Street Address

( )

City County Zip Code Phone

Mailing Address (if different)

( )

City County Zip Code Phone

EMERGENCY COORDINATOR

	( )	( )	( )
Primary Emergency Coordinator	Business Phone	24-hour Phone	Pager/Cellular Phone
	( )	( )	( )
1st Alternate	Business Phone	24-hour Phone	Pager/Cellular Phone
	( )	( )	( )
2nd Alternate	Business Phone	24-hour Phone	Pager/Cellular Phone

Note: Certification is only necessary if an SPCC Plan is required (see Appendix N).

SPILL PREVENTION, CONTAINMENT, AND COUNTERMEASURE

The Construction Contractor(s) shall identify all sources of potential spills including tank overflow, rupture, or leakage. Spill Prevention, Containment, and Countermeasure information must be included for all containers with a capacity of 55 gallons or greater that contain oil including petroleum, fuel oil, sludge, oil refuse, and oil mixed with waste.

(1) Material:_____ Total Quantity:_____
Location of use:_____
Potential direction of flow:_____ Maximum rate of flow:_____
Structures of equipment to contain spills:_____
_____

(2) Material:_____ Total Quantity:_____
Location of use:_____
Potential direction of flow:_____ Maximum rate of flow:_____
Structures of equipment to contain spills:_____
_____

(3) Material:_____ Total Quantity:_____
Location of use:_____
Potential direction of flow:_____ Maximum rate of flow:_____
Structures of equipment to contain spills:_____
_____

(4) Material:_____ Total Quantity:_____
Location of use:_____
Potential direction of flow:_____ Maximum rate of flow:_____
Structures of equipment to contain spills:_____
_____

EMERGENCY CHECKLIST

** DIAL 911 FOR EMERGENCY RESPONSE**

Emergency Coordinator:	_____	( ) _____ (day phone)	( ) _____ (night phone)
First Alternate:	_____	( ) _____ (day phone)	( ) _____ (night phone)
Second Alternate:	_____	( ) _____ (day phone)	( ) _____ (night phone)

_____ _____
Contractor Telephone Number

_____
Address

EMERGENCY NUMBERS

Emergency Response
(Ambulance, Fire, Police, Sheriff, Utah Highway Patrol) call 911

Poison Control Center (800) 456-7707

Nearest Hospitals (2) _____ Phone: _____
_____ Phone: _____

Cleanup Contractor _____ Phone: _____

Other (specify) _____ Phone: _____

Other (specify) _____ Phone: _____

AGENCY NOTIFICATIONS (to be made by the Proponent's environmental manager or environmental field supervisor or emergency response coordinator)

Wyoming Department of Environmental Quality (307) 777-7937

Idaho Department of Environmental Quality: (208) 373-0502

Division of Environmental Response and Remediation

National Response Center (800) 424-8802

Other (specify) _____ Phone #: _____
Other (specify) _____ Phone # _____

Note: The Construction Contractor(s) shall verify and update the emergency numbers on this page before and during Project construction.

WEEKLY HAZARDOUS MATERIALS/WASTE INSPECTION LOG

For each item listed below, the Construction Contractor(s) shall indicate whether existing conditions are acceptable (A) or unacceptable (U). Resolution of all unacceptable conditions must be documented. The Construction Contractor(s) shall inspect all storage facilities on a regular basis, but not less than weekly. The Construction Contractor(s) shall keep records of all inspections on file.

I. STORAGE AREAS FOR FUELS, LUBRICANTS, AND CHEMCIALS

General

A/U

____ Material yard and storage areas secured
____ National Fire Protection Association 704 system symbol posted in storage area or at material yard entrance
____ Storage areas properly prepared and signed
____ No evidence of spilled or leaking materials
____ Incompatible materials separated
____ All containers labeled properly
____ All containers securely closed
____ All containers upright
____ No evidence of container bulging, damage, rust, or corrosion
____ Material Safety Data Sheets available
____ Hazardous Materials Management and Spill Prevention Plan available

Secondary Containment Areas

A/U

____ Containment berm intact and capable of holding 110 percent of material stored
____ Lining intact
____ No materials overhanging berms
____ No materials stored on berms
____ No flammable materials used for berms

Compressed Gases

A/U

____ Cylinders labeled with contents
____ Cylinders secured from falling
____ Oxygen stored at least 25 feet away from fuel
____ Cylinders in bulk storage are separated from incompatible materials by fire barriers or by appropriate distance

II. HAZARDOUS WASTE MANAGEMENT

Waste Container Storage

A/U

____ No evidence of spilled or leaking wastes
____ Adequate secondary containment for all wastes
____ Separate containers for each waste stream – no piles
____ Waste area not adjacent to combustibles or compressed gases
____ All containers securely closed
____ Bungs secured tightly
____ Open-top drum hoops secured
____ All containers upright
____ No evidence of container bulging, corrosion
____ No severe container damage or rust
____ Containers are compatible with waste (e.g., plastic liner for corrosives, metal liner for solvents)
____ No smoking and general danger/warning signs posted

Waste Container Labeling

A/U

____ Containers properly labeled
____ Name, address, and EPA ID number or ID Number of generator listed
____ Accumulation start date listed
____ Storage start date listed
____ Chemical and physical composition of waste listed
____ Hazardous properties listed

Nonhazardous Waste Areas

A/U

____ No litter in material yard
____ No hazardous wastes with trash (e.g., contaminated soil, oily rags, or other oily materials)
____ Empty oil and aerosol containers for disposal as non-hazardous waste are completely emptied

III. EMERGENCY RESPONSE EQUIPMENT

A/U

____ Shovels
____ Absorbent material
____ Personal protective equipment (tyvek suit, gloves, goggles and booties, as appropriate)
____ Fire-fighting equipment
____ First aid supplies (e.g., medical supplies, squeeze bottle eye wash)
____ Communication equipment
____ Bung wrench (non-sparking)

IV. CORRECTIVE ACTIONS TAKEN (Required for all unacceptable conditions)

_____

_____

_____

_____

_____

_____

_____

_____

_____

_____

Date: _____ **Company (print):**_____

Inspected by (print):_____

Signature:_____

APPENDIX Q
FRAMEWORK CONSTRUCTION EMERGENCY PREPAREDNESS AND RESPONSE PLAN

Appendix Q

Framework Emergency Response Preparedness and Response Plan

Gateway West Transmission Line Project

Prepared by:

PacifiCorp
1407 W. North Temple
Salt Lake City, UT 84116

and

Idaho Power Company
1221 West Idaho Street
Boise, ID 83702

January 2013

TABLE OF CONTENTS

1.0 INTRODUCTION Q-1
2.0 PURPOSE Q-1
3.0 REGULATORY COMPLIANCE Q-2
4.0 RESPONSIBILITIES Q-2
5.0 RESPONSE COORDINATION Q-2
6.0 EMERGENCY COMMUNICATIONS Q-2
6.1 Emergency Contact List Q-3
7.0 HAZARD IDENTIFICATIONS AND KEY RESPONSE CRITERIA Q-3

LIST OF TABLES

Table Q-1. Emergency Contact List Q-3

1.0 INTRODUCTION

Rocky Mountain Power and Idaho Power Company (Companies) are proposing to construct and operate approximately 1,000 miles of new 230-kilovolt (kV), 345-kV and 500-kV alternating current (AC) electric transmission system consisting of 10 segments between the Windstar Substation at Glenrock, Wyoming, and the Hemingway Substation approximately 30 miles southwest of Boise, Idaho. The proposed transmission line is needed to supplement existing transmission lines in order to relieve operating limitations, increase capacity, and improve reliability in the existing electric transmission grid, allowing for the delivery of up to 1,500 megawatts (MW) of additional energy for the Companies' larger service areas and to other interconnected systems. The Project includes ground-disturbing activities associated with the construction of above-ground, single-circuit transmission lines involving towers, access roads, staging areas, fly yards, pulling sites as well as associated substations, communication sites, and electrical supply distribution lines. The Project crosses private land and public lands administered by the Bureau of Land Management (BLM), U.S. Forest Service (USFS), and the states of Idaho and Wyoming.

The Emergency Preparedness and Response Plan Framework is intended to provide an overview of methods to be implemented if the need for emergency management is imminent. This document discusses the existing support structure, chain of command, and emergency communications protocols to be used as a guide for an Emergency Preparedness and Response Plan to be completed by the Companies' Construction Contractor and approved by the BLM. More specific emergency procedures for blasting, fire, and hazardous materials are included in Appendices M – Framework Blasting Plan, O - Framework Fire Prevention and Suppression Plan, and P – Framework Hazardous Materials Management Plan.

Emergency response procedures will be implemented for the following potential events, or similar events:

- Downed transmission lines, structures, or equipment failure
- Fires
- Sudden loss of power
- Natural disasters
- Serious personal injury

2.0 PURPOSE

The purpose of an Emergency Preparedness and Response Plan is to provide clear procedures and information to enable the Companies, the Construction Contractor, the Compliance Inspection Contractor (CIC), and BLM Project Manager to prepare for and effectively respond to emergency situations. The primary objective of this plan is to prevent adverse impacts to human health and safety, property, and the environment that could potentially occur as a result of the construction, operation, and maintenance of Gateway West Transmission Line Project (Project).

3.0 REGULATORY COMPLIANCE

Health and safety guidelines related to high-voltage transmission lines are provided by a number of sources, including the National Electric Safety Code, American National Standards Institute, American Medical Association Council on Scientific Affairs, American Conference of Governmental Industrial Hygienists, various state regulations, and other organizations. The Occupational Safety and Health Administration (OSHA) also provide regulations for construction activities.

4.0 RESPONSIBILITIES

The Companies and the Construction Contractor are responsible for the effective response to any emergency situation or event related to the construction, operation, and maintenance of the Project. To ensure a coordinated and effective response, a chain of command will be developed as part of the Emergency Preparedness and Response Plan and followed in the event of an emergency.

In the establishment of a chain of command, considerations such as the level of activation and the participation necessary to respond to specific situations are to be taken into account. The following are factors for the establishment of a chain of command:

- Type of event (natural, environmental, electrical supply/outage, external forces)
- Severity and geographic area (multiple or combination of events)
- Anticipated duration
- Multi-division/discipline response required
- External agency coordination

5.0 RESPONSE COORDINATION

The amount of resources and coordination required for response to a specific hazard or emergency is determined by type, severity, location, and duration of the event. Most events require managing at the field operations level and will require increasing resource requirements to match the severity and duration of the event. This emergency management organization will be included as part of this Emergency Preparedness and Response Plan and will provide increasing levels of resources and the coordination necessary to support immediate or escalating emergency events.

In the event of an emergency, crews will be dispatched quickly to repair or replace any damaged equipment. Repair of the transmission line will have priority under emergency conditions and all reasonable efforts will be made to protect plants, wildlife, and other resources. Reclamation procedures following completion of repair work will be similar to those prescribed during construction.

6.0 EMERGENCY COMMUNICATIONS

Effective communication and exchange of information is essential in every emergency response. Misdirected, incorrect, or untimely information can be detrimental and even increase the threat to life or property. As an emergency event escalates, the rapid increase of information creates chaos and confusion. Simple communication diagrams can help to alleviate this situation.

6.1 Emergency Contact List

In case of emergency, call 911 first. Additional potential emergency contacts are listed in Table 6-1 and should be called as appropriate, depending on the situation (e.g., fire, injury). Further guidance on emergency response, notification, and reporting protocols are included in Appendices M – Framework Blasting Plan, O - Framework Fire Prevention and Suppression Plan, and P – Framework Hazardous Materials Management Plan.

Table Q-1. Emergency Contact List

IN CASE OF EMERGENCY - Call 911		
FIRE – Call 911 First		
Counties: Primary Contact: TBD Secondary Contact: TBD	**BLM Field Offices:** TBD USFS Ranger Districts TBD	**State Interagency Fire Centers:** TBD
LAW ENFORCEMENT		
County Sheriffs: TBD	**State Highway Patrols:** TBD	
POISON CONTROL		
National/State Poison Control Centers: TBD		
HOSPITALS AND CLINICS		
County and Municipal as Applicable: **TBD**		
HAZARDOUS SPILL RESPONSE AND NOTIFICATION – Call 911 Directly after 911 notification, the following mandatory notifications will be made by the CIC. Select and notify the appropriate government agencies based on geographic location of the spill site. Also see Appendix P – Framework Hazardous Materials Management Plan.		
Counties: TBD	**State Divisions of Emergency Services & Homeland Security:** TBD	**National Response Center:** TBD
State Departments of Environmental Quality: TBD		
OTHER NUMBERS		
Counties Fire Dispatch TBD	**BLM Authorized Officer or Representative:** TBD	**The Construction Contractor Manager:** TBD

This Emergency Contact List shall be verified at the beginning of construction and updated throughout the Project by the Construction Contractor to ensure accurate contact information.

7.0 HAZARD IDENTIFICATIONS AND KEY RESPONSE CRITERIA

The right-of-way corridor for the Project can pose potential hazards or threats in association with construction activities. The most effective response to any situation is awareness of the hazard, its potential effects and consequences, and an understanding of the resources and actions necessary to respond. It would be unreasonable to list all

the potential hazards and detail each response. Responses to different events may vary as the event evolves, but response methods and responsibilities to be determined in the Emergency Preparedness and Response Plan will be essential for any possible situation.

Effective Emergency Response training is based on plausible scenarios and then developing the understanding, elements, and actions necessary to respond. Scenarios to consider are electrocution, fatality, massive equipment failure, structure failure, weather/environment, etc.

APPENDIX R
FRAMEWORK OPERATIONS, MAINTENANCE, AND EMERGENCY RESPONSE PLAN

Appendix R

Framework Operations, Maintenance, and Emergency Response Plan

Gateway West Transmission Line Project

Prepared by:

PacifiCorp
1407 W. North Temple
Salt Lake City, UT 84116

and

Idaho Power Company
1221 West Idaho Street
Boise, ID 83702

January 2013

TABLE OF CONTENTS

1.0 INTRODUCTION R-1
2.0 OPERATION AND MAINTENANCE R-2
2.1 Routine Maintenance (Preventive Maintenance) R-3
2.2 Corrective Maintenance R-4
3.0 EMERGENCY SITUATIONS R-5
4.0 ENVIRONMENTAL PROTECTION MEASURES R-5
4.1 Service Road Management R-5
4.2 Vegetation Management R-9
4.3 Noxious Weed Control R-11
4.4 Protection Measures for Aquatic Resources R-11
4.5 Protection for Threatened, Endangered, and Sensitive Plant and Animal Species R-11
4.6 Restoration and Revegetation R-12
4.7 Protection Measures for Cultural Resources R-12
4.8 Fire Protection R-13
4.9 Emergency Notification Procedures R-13
5.0 O&M PLAN HISTORY R-14
6.0 LITERATURE CITED R-15

LIST OF TABLES

Table R-1. Company Proposed Seasonal O&M Restrictions by Time and Location for Big Game Crucial Winter Range R-7
Table R-2. IVM Recommended Management Heights in the Wire Zone and Regions R-10
Table R-3. O&M Contact List R-14

LIST OF FIGURES

Figure R-1. Transmission Line Vegetation Management Zones. R-10
Figure R-2. Vegetation Management Regions Based on Line Height R-10

1.0 INTRODUCTION

Rocky Mountain Power and Idaho Power Company (Companies) are proposing to construct and operate approximately 1,000 miles of new 230-kilovolt (kV), 345-kV and 500-kV alternating current electric transmission system, called the Gateway West Transmission Line Project (Project), consisting of 10 segments between the Windstar Substation at Glenrock, Wyoming, and the Hemingway Substation approximately 30 miles southwest of Boise, Idaho. The proposed transmission line is needed to supplement existing transmission lines in order to relieve operating limitations, increase capacity, and improve reliability in the existing electric transmission grid, allowing for the delivery of up to 1,500 megawatts of additional energy for the Companies' larger service areas and to other interconnected systems. The Project includes ground-disturbing activities associated with the construction of above-ground, single-circuit transmission lines involving towers, access roads, multiuse areas, fly yards, and pulling sites as well as associated substations, communication sites, and electrical supply distribution lines. The Project crosses private land and public lands administered by the Bureau of Land Management (BLM), U.S. Forest Service (Forest Service), and the states of Idaho and Wyoming.

This document presents the plan proposed by the Companies for conducting routine and emergency operation and maintenance (O&M) activities for the Project. This plan is intended to ensure the following:

- O&M activities comply with applicable state and federal laws and policies;
- Consistency across and within federal jurisdictions;
- The Companies are able to access the transmission line and ancillary facilities and implement the necessary O&M activities in a timely, cost effective and safe manner;
- Impacts to the environment are avoided where practicable or are minimized; and
- The Companies comply with the North American Electric Reliability Corporation (NERC) and Western Electric Coordinating Council (WECC) reliability and service requirements.

NERC's mission is to ensure the reliability of the bulk power system in North America. To achieve that, NERC develops and enforces reliability standards; assesses adequacy annually via 10-year and seasonal forecasts; monitors the bulk power system; evaluates users, owners, and operators users for preparedness; and educates, trains, and certifies industry personnel. NERC works with eight regional entities to improve the reliability of the bulk power system. The members of the regional entities come from all segments of the electric industry: investor-owned utilities; federal power agencies; rural electric cooperatives; state, municipal and provincial utilities; independent power producers; power marketers; and end-use customers. These entities account for virtually all the electricity supplied in the United States, Canada, and a portion of Baja California Norte, Mexico.

The Western Systems Coordinating Council (WSCC) was formed with the signing of the WSCC Agreement on August 14, 1967 by 40 electric power systems. Those "charter

members" represented the electric power systems engaged in bulk power generation and/or transmission serving all or part of the 14 Western States and British Columbia, Canada. The WECC was formed on April 18, 2002, by the merger of WSCC, Southwest Regional Transmission Association (SWRTA), and Western Regional Transmission Association (WRTA). WECC's interconnection-wide focus is intended to complement current efforts to form Regional Transmission Organizations (RTO) in various parts of the West.

WECC and the nine other regional reliability councils were formed due to national concern regarding the reliability of the interconnected bulk power systems, the ability to operate these systems without widespread failures in electric service, and the need to foster the preservation of reliability through a formal organization.

WECC members have long recognized the many benefits of interconnected system operation. During the mid-1960s, expansion of interconnecting transmission lines among systems in the western United States and western Canada resulted in the complete interconnection of the entire WECC region. As this expansion was taking place, systems generally adopted the Operating Guides of the North American Power Systems Interconnection Committee (NAPSIC) to promote consistent operating practices within the region. NAPSIC later became the NERC Operating Committee.

The reliability management system (RMS) was created as a way to enforce compliance. This contract obligates entities to abide by certain critical reliability standards and to provide the data needed to verify compliance. The contract also imposes sanctions, both monetary and non-monetary according to a set schedule, for violations of reliability criteria. Currently all control areas but one are signatories to the RMS agreement, and almost 90 percent of the customer load in the Western Interconnection is served under RMS.

This Plan addresses routine, corrective and emergency response activities for O&M of the transmission line and its ancillary facilities. This Plan will be reviewed and updated as necessary and as agreed to by the Companies and the BLM, Forest Service, and Bureau of Reclamation (Agencies).

2.0 OPERATION AND MAINTENANCE

The Companies perform a number of activities to keep transmission lines operational and in good repair. Most of these activities, such as those for routine patrols, inspections, or scheduled maintenance, are planned in advance. However, there will be an occasional need for emergency response in cases where public safety and property are threatened, to prevent imminent damage to the transmission line and ancillary facilities, or to restore service in the event of an outage.

Routine, corrective, and emergency response activities will be conducted in accordance with this O&M Plan without previous notification or approval from the Agencies. Exceptions where prior notification and approval are required are described in Section 4. Maintenance activities outside of the right-of-way (ROW), outside of established service and access roads or other Project related ancillary facilities, or that are not identified in this Plan will not be conducted until approved by the Agencies. An exception to this would be when emergency action/maintenance is needed which

requires some outside ROW work to be completed to ensure reliable power to customers.

Typical schedules and equipment used for the O&M activities are provided below. However, additional vehicles and equipment may be necessary depending on the terrain, site access, and necessary maintenance work. Work may also be conducted outside of the typical schedule; schedule changes may occur as a result of weather, manpower, equipment availability, budgets, and other factors.

2.1 Routine Maintenance (Preventive Maintenance)

Routine maintenance activities are conducted on a regular basis and have been carried out historically to identify and repair any deficiencies. These activities do not damage vegetation or soil outside of the ROW, do not adversely impact sensitive resources — including known federal and state listed species, waters of the United States, and cultural resources — and do not require land manager approval. Personnel are generally present in any one area for less than one day. The following are examples of routine maintenance activities:

- Routine air patrols from a helicopter to inspect for structural and conductor defects, conductor clearance problems and hazardous trees.
- Routine ground patrols to inspect structural and conductor components. Such inspections generally require either an all-terrain vehicle (ATV) or pickup and possibly additional support vehicles traveling on access and service roads and may rely on either direct line-of-sight or binoculars. In some cases, the inspector may walk the ROW. Patrols are typically conducted in the spring and fall. Follow-up maintenance is scheduled depending on the severity of the problem — either as soon as possible or as part of routine scheduled maintenance.
- Climbing surveys may be necessary to inspect hardware or make repairs. Personnel generally access these structures by pickup, ATV, or on foot.
- Structure or conductor maintenance typically occurs from a bucket truck or boom truck. The maintenance vehicle may be located on or off a road, and no-to-minimal grading is necessary to create a safe work area.
- Cathodic protection surveys to check the integrity and functionality of the anodes and ground beds. These surveys typically require personnel to use an ATV or pickup and make brief stops.
- Routine cyclical vegetation clearing to trim or remove tall shrubs and trees to ensure adequate ground-to-conductor clearances. Vegetation clearing cycles vary from 3 to 10 years or as needed (dependent upon the vegetation present). Personnel generally access the area by pickup, ATV, or on foot; use chainsaws to clear the vegetation; and typically spend less than half a day in any one specific area. In some cases vegetation may be cleared using mechanical means.
- Removal of individual trees or snags (hazard trees) that pose a risk of falling into conductors or structures and causing outages or fires. Personnel generally access hazard trees by truck, ATV, or by foot from an access or service road, and cut them with a chainsaw or similar tool. Any felled trees or snags are left in

place as sources of large woody debris or as previously directed by the land management agency. Felled green trees are limbed to reduce fire hazard.

- Wood poles are periodically treated to retard rotting and structural degradation. Wooden poles are limited to the distribution lines serving substations and regeneration stations on this Project. Personnel typically access structures by pickup, ATV, or on foot; inspect and test (including the subsurface) the poles; and then treat them by injecting preservatives into the poles if required. Wood pole inspections and treatments generally occur on a 10-year cycle.
- Routine road maintenance, such as blading (as needed) the road to improve surface condition and drainage, or removing minor physical barriers, such as rocks and debris. All initial road maintenance is performed by field crews which typically use ATVs, pickups, chainsaws, and hand tools. Trees and brush are cut off at grade to minimize damage to vehicles. Slash, deadfall, and boulders are placed at the edge of the road or down slope of the road bed, depending on site topography, to serve as a filtering windrow to minimize erosion and sedimentation. Smaller vegetation (e.g., grasses) is left in the road bed unless it is too tall, hinders access, or could be construed as a fire hazard to O&M vehicles.
- Vegetation removal may be required on service roads to allow the necessary clearance for access and provide for worker safety. Field crews access the service roads by pickup or ATV and use chainsaws and hand tools to clear the vegetation. Where practicable and feasible, mechanical methods may be used.
- Installation of bird protection devices, bird perch discouragers, and the relocation or removal of bird problem nests posing imminent fire or outage risk.
- Noxious weed control and vegetation management activities that include the use of herbicides. Herbicide use is based on agreement with the landowner or federal land management agency for the parcel in question and the chemicals used are agreed to in advance.

2.2 Corrective Maintenance

Corrective maintenance activities are relatively large-scale efforts that occur infrequently, may result in more extensive vegetation clearing or earth movement, and may include rehabilitation seeding and associated activities (e.g., measures to control noxious weeds). Personnel are generally present in any one location or area for a prolonged time, generally more than one day. The following are examples of corrective maintenance:

- Non-cyclical vegetation clearing to remove saplings or larger trees in the ROW.
- Structure or conductor maintenance in which earth must be moved, such as the creation of a landing pad for construction or maintenance equipment.
- Structure (e.g., cross-arm, insulator, structure) replacement.
- Road maintenance involving erosion control, water drainage installation or repair (such as culverts or rock crossings), road rehabilitation after major disturbances

(such as slumping or a storm event), or other road maintenance requiring heavy equipment (not including routine grading).

- Follow-up restoration activities, such as seeding, noxious weed control, and erosion control.
- Conductor repair or replacement, which requires the use of several types of trucks and equipment and grading to create a safe work area to hang and pull the conductor into place.

3.0 EMERGENCY SITUATIONS

Emergency situations are those conditions that may result in imminent or direct threats to public safety or threaten or impair the Companies' ability to provide reliable transmission service to its customers. Emergency situations may include:

- Failure of conductor splices;
- Damage to structures or conductors from wildfire, high winds, ice, or other weather-related conditions;
- Line or system outages or fire hazards caused by trees falling into conductors;
- Breaking or imminent failure of cross-arms or insulators, which could, or does, cause conductor failure; or
- Damage to structures or conductors from vandalism.

In the case of an emergency where life or substantial property is at risk or there is a potential or actual interruption in service, the Companies will promptly respond to the emergency and conduct any and all activities, including emergency repair requiring heavy equipment access to the structures or other ancillary facilities, needed to remedy the emergency and will implement feasible and practicable environmental protection measures (EPMs). Follow-up actions will follow this Plan.

4.0 ENVIRONMENTAL PROTECTION MEASURES

O&M activities are planned to minimize impacts to the environment. EPMs will be implemented by the Companies during routine and corrective O&M activities and, to the extent possible, during emergency situations.

4.1 Service Road Management

Transmission line service roads are necessary for access to, and maintenance of, transmission lines, structures or ancillary facilities, but they are not part of the public or federal network of roads. They are generally closed to the public and will be maintained by the Companies.

During routine operations, vehicular access will be needed to reach each structure for periodic inspections and maintenance and to areas of forest or tall shrubs to control vegetation in the ROW for safe operation. The Companies plan to employ live-line maintenance techniques on the transmission line (see Appendix B, Section 3.1.3). Live line maintenance and repair techniques require the utilization of high-reach bucket trucks

and other trucks and equipment. Roads required as routine service roads for the operational life of the Project will be revegetated following construction but will not be recontoured; they would be maintained free of trees and shrubs for a minimum 8-foot width.

For non-routine maintenance requiring access by larger vehicles, the full width of the access road may be used. Roads would be repaired, as necessary, but would not be routinely graded. In order to preserve the ability to enter rapidly, the road structure (cuts and fills) would be left in place. In an emergency (i.e., in the event of a tower or conductor failure) full emergency access, including cranes and other heavy equipment, will be needed. Based on historical reliability of h-frame and lattice structures, it is anticipated that only a small fraction of the tower sites will require emergency access over the life of the Project.

Other roads may be travelled over by the Companies during operations. However, these roads are not classified as service roads and will not be maintained by the Companies except as noted. These include:

- Public roads, including state highways and county roads—These roads are for public use, and the appropriate state or county entity maintains them.
- Open roads on federal land—The appropriate federal agency (typically BLM or Forest Service) maintains these roads, which are open to the public. These roads, including drainage features, cuts, and fill slopes, would be repaired by the Companies if damaged during O&M activities but not maintained on a routine basis.
- Closed federal land roads—These roads are still needed for administrative or emergency functions, but they have been closed to the public because of management policies to protect natural resources or reduce maintenance costs. If utilized during O&M activities The Companies would assume some maintenance responsibilities proportionate to their use for O&M purposes.

The Companies typically perform two types of road maintenance activities: 1) vegetation and debris clearing to maintain safe access and 2) repairs using heavy equipment. Roads are inspected generally every 3 to 6 years and repairs are made as necessary. Typically, a small crew uses hand tools to cut small brush and trees (greater than 12 inches tall); remove dead-fall and debris; and repair and replace signs on access and service roads. Crews also prepare an inventory of road damage that will require ground disturbance (e.g., repair of a failed bank), and repair work is scheduled accordingly (typically the following year). Inspections and maintenance are typically conducted from spring through summer, when roads are clear of snow.

The Companies will implement the O&M EPMs described in Appendix Z of the POD when maintaining roads and follow the seasonal restrictions by time and location for big game crucial winter range time shown in Table R-1.

Table R-1. Company Proposed Seasonal O&M Restrictions by Time and Location for Big Game Crucial Winter Range

Field Office	Seasonal Timing Description	Segment Proposed	Species Mile Marker where Seasonal Restriction is Applicable (mileage)				
			Mule Deer	Elk	Antelope	Moose	Bighorn Sheep
BLM Casper Field Office	No surface-disturbing and wildlife-disturbing activities are allowed from November 15 through April 30 on all crucial big game winter ranges.	1W(a)	19.0 – 26.2				
		1W(c)	6.1 – 20.3		2.4 – 6.7		
BLM Rawlins Field Office	No surface disturbance and distrupting activities within big game crucial winter range are allowed from November 15 to April 30.	1W(a)	71.7 – 77.88 (end)		57.4 – 63.4		
					76.7 – 77.88 (end)		
		1W(c)	67.1 – 77.81 (end)		51.5 – 57.7		
					70.2 – 77.81 (end)		
		2	0 – 1.5		0 – 9.0		
			25.3 – 28.6		29.1 – 37.7		
			32.7 – 37.6		62.6 – 67.9		
			44.0 – 51.9				
		3			18.7 – 22.6		
BLM Rock Springs Field Office	Big game winter ranges would be protected to ensure continued usability by limiting activities during crucial seasons of use and by limiting the amount of habitat disturbed	3	4.7 – 7.7		22.6 – 45.27 (end)		
		4 (Anticline to Jim Bridger tie-in)			0 – 3.0		
					4.9 – 5.02 (end)		
		4			0 – 1.1		
					6.2 – 16.2		
					19.0 – 20.8		
					24.8 – 30.9		
					51.8 – 57.8		
BLM Kemmerer Field Office	(winter and parturition)	4	117.0 – 123.1	109.5 – 119	83.5 – 85.1	106.0 – 107.2	
						115.6 – 118.9	
BLM Pocatello Field Office	None Identified	4	132.5 – 147.6	141.4 – 144.7			
			153.7 – 161.1	158.5 – 162.1			
			169.6 – 173.9	170.9 – 173.8			
			176.5 – 177.1				
			178.7 – 184.0				
			186.0 – 196.2				
		5	3.2 – 11.9				
			20.3 – 21.1				

Table R-1. Company Proposed Seasonal O&M Restrictions by Time and Location for Big Game Crucial Winter Range (continued)

Field Office	Seasonal Timing Description	Segment Proposed	Species Mile Marker where Seasonal Restriction is Applicable (mileage)				
			Mule Deer	Elk	Antelope	Moose	Bighorn Sheep
BLM Pocatello Field Office (cont'd)		5 (cont'd)	26.9 – 32.2				
			34.0 – 49.5				
			50.0 – 52.2				
		7	3.1 – 11.0				
			19.8 – 21.1				
			26.4 – 31.9				
			33.5 – 40.9				
			44.0 – 46.8				
BLM Burley Field Office	None Identified	5	53.7 – 55.0				
		7	51.1 – 56.9				
			76.4 – 81.3				
			82.1 – 88.5				
			109.7 – 118.0				
		9	0 – 10.0				
BLM Shoshone Field Office	None Identified	8	0 – 0.3				
			4.5 – 16.4				
			24.3 – 45.3				
		10	15.7 – 19.1				
			7.6 -13.2				
			0 – 1.6				
BLM Four Rivers Field Office	Cascade RMP - No surface occupancy during December 1 through April 1 in crucial habitat, Kuna MFP – Restricted/closed in critical winter range if necessary – November 15 through April 15.	8	45.3 – 56.7	74.4 – 90.0	72.1 – 79.6		124.0 – 125.5
BLM Owyhee Field Office	None Identified	9			137.1 – 159.4		

4.2 Vegetation Management

The Companies manage vegetation within their ROWs and in access and service roads to minimize interference with the flow of electricity, to address safety issues, and to facilitate O&M activities. The vegetation management complies with the National Electric Safety Code, ANSI A300 Part 7: American Operations Integrated Vegetation Management and Electric Utility Rights-of-Way and the ISA Best Management Practices. Additionally, the Companies comply with vegetation management standards required by the NERC and WECC vegetation management guidelines; failure to comply with these requirements can result in substantial financial penalties.

Objectives of Integrated Vegetation Management (IVM) on utility ROWs are to establish sustainable plant communities that are compatible with the electric facilities. The intent is to provide stable, low growing plant ecotypes that reduce fire risk and maintain safe access to the line and associated facilities. In general, this involves removing tall growing tree species. Establishment of vegetation will also reduce the potential for noxious weeds to become established in the ROW.

IVM has a series of control methods used to achieve the aforementioned objectives. These include, but are not limited to:

- Manual Control Methods: workers with hand-carried tools, including power tools, used in selective or environmentally sensitive areas.
- Mechanical Control Methods: conducted with a large variety of different types of machines that are efficient in clearing dense stands of vegetation.
- Chemical Control Methods:
  - Tree Growth Regulators that are designed to reduce the natural growth rates by interfering with natural plant processes.
  - Herbicides: Noxious or invasive weeds along with stumps and saplings of tall growing species may be controlled with EPA approved herbicides.
- Biological Control Methods: use of natural processes to control undesirable vegetation.
- Cultural Control Methods: take advantage of seed banks of native, compatible species lying dormant on-site; this encourages the establishment of early successional plant communities.

For the purposes of IVM, the ROW has been divided into the wire zone and the border zone as shown in Figure R-1 and as defined below:

- Wire Zone – The ROW portion directly under the wires and 10 feet beyond the outside phases.
- Border Zone – The outside edge of the wire zone to the edge of the ROW.

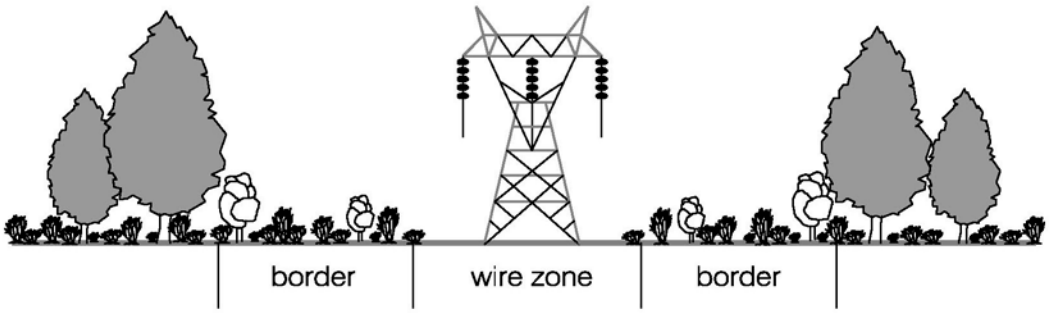

Figure R-1. Transmission Line Vegetation Management Zones.

The IVM control method(s) implemented may be directed by the distance of the conductor to the ground surface (based on maximum calculated sag) as shown on Table R-2 and Figure R-2, and is defined by region as follows: Region A, where the lines are less than 50 feet off the ground, Region B where the lines are 50 to 100 feet off the ground, and Region C where lines are greater than 100 feet off the ground. Table R-2 indicates the heights at which vegetation will be managed, based on zones and regions.

Table R-2. IVM Recommended Management Heights in the Wire Zone and Regions

Zone	Region		
	A	**B**	**C**
Wire Zone	Remove All Trees	Remove all trees if less than 50 feet clearance between top of tree and conductor.	Remove all trees if less than 50 feet clearance between top of tree and conductor.
Border Zone	Remove all trees greater than 25 feet in height.	Removal of any hazard trees*.	Removal of any hazard trees*.

* Hazard tree is defined as any tree that is structurally unsound that could strike a target (any utility related infrastructure) when it falls. Hazard trees can occur outside of the ROW and are typically removed annually.

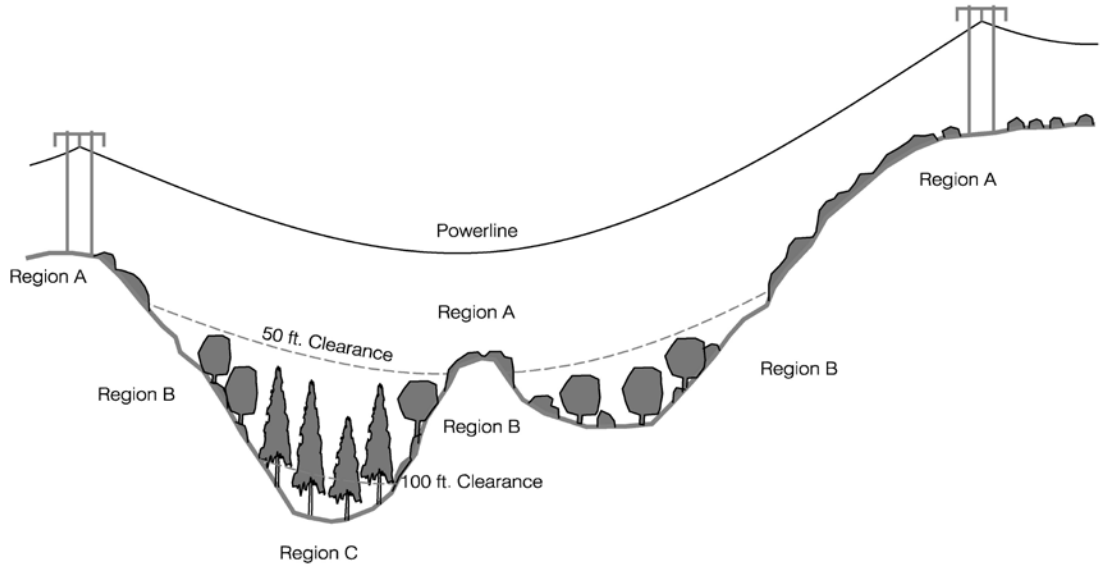

Region Definitions:
Region A: Where conductor to ground distance is less than 50 feet.
Region B: Where conductor to ground distance is more than 50 feet, but less than 100 feet.
Region C: Where conductor to ground distance is greater than 100 feet.

Figure R-2. Vegetation Management Regions Based on Line Height

Generally, the Companies propose to conduct IVM control methods/activities within the ROW every 3 to 10 years, depending on a variety of conditions such as topography, vegetation type and growth rates, and the potential for vegetation to interfere with safe operation of the line prior to the next clearing cycle. The Companies propose to use a variety of IVM control methods and have developed the O&M EPMs described in Appendix Z of the POD for maintaining vegetation within the transmission line ROW.

4.3 Noxious Weed Control

Maintenance vehicles, ATVs, and equipment have the potential to transport weed seeds from one area to another via dirt and debris that inadvertently collects on the equipment. The Companies will implement the O&M EPMs described in Appendix Z of the POD.

4.4 Protection Measures for Aquatic Resources

Streams or watercourses with definable streambeds or stream banks, regardless of whether there is flowing water, are important because they provide habitat for a variety of animal and plant species. The Project transmission lines parallel and cross numerous waterways and riparian areas. Of critical importance is the protection of habitat for sensitive plant and animal species, including aquatic species. The Companies propose the O&M EPMs described in Appendix Z of the POD to protect aquatic resources while maintaining vegetation in and around important aquatic resources.

4.5 Protection for Threatened, Endangered, and Sensitive Plant and Animal Species

The Companies have taken a thorough, systematic approach in providing protection for threatened, endangered, and sensitive plant and animal species. After taking into consideration wildlife and plant resources as well as other important resources during siting and routing, the Companies recognized the need for additional measures to minimize the impact from construction of the Project and submitted a Wildlife Conservation Measures Plan.

The Companies will implement the O&M measures described in Appendix Z of the POD to protect plant and animal species during routine and corrective O&M activities:

Nesting, roosting, and perching birds can cause power outages if their feces or nesting materials interfere with conductors, insulators, or air gap. The Companies, in consultation with the U.S Fish and Wildlife Service (USFWS), manage nesting on transmission line structures to reduce conflicts. Such management may include relocating nests, modifying structures, and providing nesting platforms. The Companies will continue to consult with the USFWS, and when a problem nest is located on federal or state lands, the appropriate land management agency.

If an emergency occurs and access is immediately needed, the federal agency will be notified as soon as possible. Depending on the urgency, the agency may not have responded until after the repair work has begun. Timing restrictions may not be adhered to, but the other measures listed above will be followed to the extent possible.

4.6 Restoration and Revegetation

The Reclamation, Revegetation, and Weed Management Plan to be written by the Companies and approved by the appropriate agency with regulatory authority over lands within the Project area, will include site-specific restoration measures, species to be replanted, and monitoring. It combines the Companies' best management practices (BMPs) with site-specific mitigation developed in consultation with the agencies. After ground-disturbing maintenance activities, the Companies propose to use the O&M EPMs described in Appendix Z of the POD to ensure that appropriate reclamation and revegetation is implemented, and to prevent accidental introduction or transport of noxious weeds along the ROW.

4.7 Protection Measures for Cultural Resources

As part of the environmental impact statement preparation, and prior to any construction activities, a 100 percent pedestrian survey of the ROW and areas proposed for disturbance outside the ROW will have cultural and/or paleontological surveys conducted. All cultural and/or paleontological resources or historic or prehistoric sites or objects discovered by the Companies, or their designated contractor, will be immediately reported. Additional surveys will not be conducted for O&M activities if the work area was previously surveyed prior to construction of the line and ancillary facilities.

If new probable historic, cultural, or paleontological resources are discovered during routine or corrective O&M activities, potentially destructive work within 300 feet of the find will be halted and the appropriate federal or state agency notified. The Companies will also immediately implement the O&M measures described in Appendix Z of the POD.

a) Flagging will be erected to prohibit potentially destructive activities.

b) The Companies' archaeologist or designated archaeologist will make a preliminary assessment of the newly discovered resource.

c) If the archaeologist determines that the discovery represents a potential new site or an undocumented feature of a documented site, the appropriate federal or state agency will be notified.

d) O&M will not resume in the identified area until cleared by the appropriate Agency.

Regarding routine and corrective, the Companies propose to use the O&M EPMs presented in the POD to ensure that appropriate protection to cultural resources is given.

All human interments will be treated with the respect accorded them by state and federal laws applying to human remains. If human remains are discovered during O&M activities, the Companies will stop all work in the immediate area to protect the integrity of the find and notify the appropriate law enforcement agency and the landowner or land management agency as soon as possible. In addition, the location of the find will be flagged or fenced off to protect it from further impacts. The law enforcement agency or coroner will determine the age of the human remains. If the remains are not modern,

then the Companies will work with the federal or state agency to determine what mitigation is necessary and, once the mitigation is complete, resume work in the area.

4.8 Fire Protection

Fire regulations on federally managed lands are generally in effect between April 1 and October 31 and at other times with unusual weather conditions. O&M activities will follow the requirements and procedures specified by the appropriate federal or state agency when conducted on federal or state lands.

The Companies are responsible for inspecting the transmission lines for fire hazards. When working during fire season, the Companies and/or their contractor will carry the following suppression tools and equipment:

- All power-driven equipment shall be equipped with one (1) fire extinguisher having a UL rating of at least 5 BC and one “D” handled or long handled round point shovel, size “0” or larger;
- Each motor patrol, truck, and passenger-carrying vehicle shall be equipped with a double-bit axe or Pulaski, 31/2 pounds or larger; and
- Each internal combustion engine shall be equipped with a spark arrester that meets the federal land managing agency’s standards.

The Companies and the federal or state land manager will work cooperatively to evaluate request for Industrial Fire Precaution Level (IFPL) Waivers that would allow the Companies and/or their contractors to continue working when certain fire restrictions are in place.

Transmission lines in the western United States may be interconnected with the lines of other utilities. Continued operation of these lines provides stability to the entire interconnected Western transmission system. In addition, continuous operation of the transmission lines is necessary for the Companies to supply electric service to their customers. Therefore, the federal or state agency will use its best efforts to avoid using fire suppression techniques that could take the lines out of service. If the federal or state land manager determines that it must use fire suppression techniques, they will notify the Companies of any and all fire suppression efforts that could come into close proximity (2 miles) with the transmission lines prior to initiating those efforts.

The Agencies will notify the Companies if they are planning a prescribed burn within two (2) miles of the transmission line or ancillary facilities.

4.9 Emergency Notification Procedures

If the Companies become aware of an emergency situation that is caused by a fire on or threatening federal or state land that could damage the transmission lines or their operation, they will notify the appropriate federal contact. Likewise, if the federal or state land manager becomes aware of an emergency situation that is caused by a fire on or threatening federal or state land and that could damage the transmission lines or their operation, it will notify the Companies.

5.0 O&M PLAN HISTORY

The O&M Plan is a living document and changes are anticipated after the plan's acceptance. Amendments will include the date on which changes were made, a brief description of those changes, and the signatures of authorized representatives of the Companies and the agency accepting the changes.

This plan and its updates will be distributed to the following BLM and Forest Service field offices (see Table R-3). Additionally, the Plan will be made available, as appropriate, to Company personnel and their contractors. The Companies will be responsible for distributing updates when they are made. If the federal agencies identify additional parties that require a copy of the Plan, they are responsible for distribution and ensuring that party has the current plan.

In addition, the following items will become part of this section of the O&M plan:

- List of road closures, and gate locations.
- Maps containing known locations of sensitive plant and animal species mapped as "sensitive areas" without specifying the resource.
- Known locations of cultural features mapped as "sensitive areas" without specifying the resource.

Table R-3. O&M Contact List

Department/Role	Contact Name	Telephone	Cell Phone	Email
Idaho BLM				
Boise District Office & Four Rivers Field Office 3948 Development Avenue Boise, ID 83706	Aden Seidlitz (DO) Terry Humphreys (FO)	(208) 384-3391 (208) 384-3300	(208) 850-5268 None	aiden_seidlitz@blm.gov terry_humphreys@blm.gov
Twin Falls District 440 W F Street Shoshone, ID 83352	Jenifer Arnold	(208) 736-2382	(208) 308-1003	jenifer_arnold@blm.gov
Bruneau Field Office 3948 Development Avenue Boise, ID 83706	Cecil Werven	(208) 384-3455	(208) 384-3493	cecil_werven@blm.gov
Owyhee Field Office 20 First Avenue West Marsing, ID 83639	Kelley Moore	(208) 896-5917	(208) 896-5940	kelly_moore@blm.gov
Jarbidge Field Office 440 W F Street Shoshone, ID 83352	Brian Davis	(208) 736-2380	None	bdavis@blm.gov
Burley Field Office 15 East 200 South Burley, ID 83318	Mike Courtney	(208) 677-6635	None	mike_courtney@blm.gov
Shoshone Field Office 440 W F Street Shoshone, ID 83352	Ruth Miller	(208) 732-7227	None	ruth_miller@blm.gov
Idaho Falls District 4350 Cliffs Drive Pocatello, ID 83204	Joe Kraayenbrink	(208) 524-7500	None	joe_kraayenbrink@blm.gov
Pocatello Field Office 4350 Cliffs Drive Pocatello, ID 83204	David Pacioretty	(208) 478-6341	None	david_pacioretty@blm.gov

Table R-3. O&M Contact List (continued)

Department/Role	Contact Name	Telephone	Cell Phone	Email
Wyoming BLM				
Wyoming State Office PO Box 1828 Cheyenne, WY 82003	Diane Schurman	(307) 775-6189	None	diane_schurman@blm.gov
Rawlins Field Office PO Box 2407 Rawlins, WY 82301	Matt Simons	(307) 328-4282	None	matt_simons@blm.gov
Rock Springs Field Office 280 Highway 191 North Rock Springs, WY 82901	Patricia Hamilton	(307) 352-0334	None	patricia_hamilton@blm.gov
Casper Field Office 2987 Prospector Drive Casper, WY 82604	Randy Sorenson	(307) 261-7522	None	randy_sorenson@blm.gov
Kemmerer Field Office 312 Highway 189 North Kemmerer, WY 83101	Kelly Lamborn	(307) 828-4505	None	kelly_lamborn@blm.gov
Forest Service				
Caribou/Targhee NF 1405 Hollipark Drive Idaho Falls, ID 83401	Dennis Duehren	(208) 847-8935	None	dduehren@fs.fed.us
Medicine Bow NF 2468 Jackson St. Laramie, WY 82070	Misty Hays	(307) 358-7102	None	mahays@fs.fed.us
Sawtooth National NF Minidoka Ranger District 2306 Hiland Avenue Burley, ID 83318	Scott Nannenga	(208) 678-0430	None	snannenga@fs.fed.us

6.0 LITERATURE CITED

IPC and RMP (Idaho Power Company and Rocky Mountain Power Company). 2010. Revised Proposed Plant and Wildlife Conservation Plan – Construction Activities. Report dated December 12, 2008.

APPENDIX Z
ENVIRONMENTAL PROTECTION MEASURES

Appendix Z

Environmental Protection Measures
Gateway West Transmission Line Project

Prepared by:

Idaho Power Company
1221 West Idaho Street
Boise, ID 83702

and

Rocky Mountain Power
1407 W North Temple
Salt Lake City, UT 84116

January 2013

TABLE OF CONTENTS

1.0 INTRODUCTION.....Z-1
1.1 Purpose.....Z-1
1.2 Relationship to Other Environmental Protection Plans.....Z-1
1.3 Contents.....Z-2

LIST OF TABLES

Table Z-1. Companies' Proposed Environmental Protection Measures Z-3

1.0 INTRODUCTION

Rocky Mountain Power and Idaho Power Company (Companies) are proposing to construct and operate approximately 1,000 miles of new 230-kilovolt (kV), 345-kV and 500-kV alternating current (AC) electric transmission system consisting of 10 segments between the Windstar Substation at Glenrock, Wyoming, and the Hemingway Substation approximately 30 miles southwest of Boise, Idaho. The proposed transmission line is needed to supplement existing transmission lines in order to relieve operating limitations, increase capacity, and improve reliability in the existing electric transmission grid, allowing for the delivery of up to 1,500 megawatts (MW) of additional energy for the Companies' larger service areas and to other interconnected systems. The Project includes ground-disturbing activities associated with the construction of above-ground, single- circuit transmission lines involving towers, access roads, staging areas, fly yards, pulling sites as well as associated substations, communication sites, and electrical supply distribution lines. The Project crosses private land and public lands administered by the Bureau of Land Management (BLM), U.S. Forest Service (USFS), and the states of Idaho and Wyoming.

This document presents the environmental protection measures (EPMs) proposed by the Companies for the avoidance and minimization of impacts to environmental resources related to construction and operation activities for the Gateway West Transmission Line Project (Project).

1.1 Purpose

The objectives of this plan are to recognize the substantial effort already invested by the Companies in avoiding and minimizing impacts and to present a comprehensive plan that does the following:

- Meets the intent of the current BLM and USFS management guidance for federal lands;
- Apply EPMs from a practical perspective based on differences in land ownership and management patterns of the Project; and
- Balances cost, practicality, and feasibility of Project implementation with avoiding or minimizing environmental impacts.

1.2 Relationship to Other Environmental Protection Plans

Section 4.0 and Table 4-1 of the POD describe the framework plans the Companies will use to ensure environmental protection during construction, operation, and maintenance. Each plan will include EPMs. These measures have been developed by the Companies to maintain environmental quality and meet requirements of various agencies. For the purposes of ongoing review and discussion with agencies, the measures are submitted herein as Appendix Z. Once the measures are finalized, they will be incorporated into individual plans. The Companies will be responsible to ensure their contractors and employees will implement these measures.

1.3 Contents

- **Column 1**: This column contains the EPM number as presented in the DEIS. By presenting this number the reader can more easily reference back to the DEIS to see the frame of reference in which it was presented and how the wording of the measure may have changes based on comments received during the DEIS comment period, through additional analysis and discussions with BLM.
- **Column 2**: This column contains the EPM number agreed to between the Companies and BLM to allow for a clear and consecutive presentation of EPMs by resource.
- **Column 3**: A description of the EPM that the Companies are proposing to implement during construction and operations. There EPMs become part of the Project as proposed by the Companies.
- **Columns 4-6**: These columns serve as a guide to the phases of the project for which the EPM would apply: design and engineering; construction; or operations and maintenance.
- **Columns 7-9.** These columns identify where the EPM is proposed to be applied by the Companies based on ownership. In addition the Companies propose to apply the EPMs more broadly for certain segments based on land pattern characteristics. The Wyoming segments of the proposed Project cross a relatively large percentage of Federal land, and private lands tend to be unsigned and isolated sections of land in a checkerboard pattern. In Idaho, the proposed Project for Segments 6, 8, and 9 is largely on Federal land, with private and state land interspersed. Therefore, in Wyoming and Idaho Segments 6, 8, and 9, the EPMs will be applied to the entire segment (i.e., including the private and state land) except as follows:
    - Proposed substation and regeneration sites located on private land unless they are standard EPMs of the Companies;
    - EPMs that are only applicable to a specific BLM Field Office;
    - EPMs that are only applicable to National Forest System lands; and
    - Different practices will be followed on private property that are at the request of the property owner and don't violate the law.

    In Idaho, Segments 4, 5, 7 and 10 are predominantly private ownership in agriculture and other development, and for the most part, the Federal land in these segments is clustered. In these segments, EPMs will be applied based on ownership as identified in Table Z-1 below except as follows:

    - Proposed transmission line substation and regeneration sites located on private land unless they are standard EPMs of the Companies; and
    - Different practices will be followed on private property that are at the request of the property owner and don't violate the law.

Table Z-1. Companies' Proposed Environmental Protection Measures

GATEWAY WEST TRANSMISSION LINE PROJECT

1	2	3	4-6			7-9		
			Application Phase			Applicable to Land Ownership[1/]		
DEIS Number	New EPM Number for FEIS Submittal	Environmental Protection Measures	Design and Engineering	Construction	Operations and Maintenance	Federal Land and all land in Wyoming and Idaho Segments 6, 8 and 9	State Land in Idaho	Private Land in Idaho Segments 4, 5, 7, and 10
OPERATIONS AND MAINTENANCE								
G-1	G-1	Resource Management Plan (as amended) design criteria, Best Management Practices (BMPs), and mitigation requirements will apply on BLM-managed lands.	•	•	•	•		
G-2	G-2	Forest Plan Standards and Guidelines (as amended) will apply on National Forest System (NFS) lands. Ground-disturbing and vegetation management activities will comply with all Agency-wide, regional, and state BMPs.	•	•	•	•		
–	G-3	Third-party Environmental Construction Inspection Contractor (CIC) Monitors approved by the Agencies will monitor construction activities. Monitoring activities will be structured in accordance with the Environmental Compliance Management Plan included as Appendix C of the Plan of Development.		•		•		
–	G-4	All wildlife and plant surveys/pre-construction surveys will be considered as "casual use" activities and will not be restricted or prevented to occur due to overlapping season and temporal restrictions.		•		•		
OM-1	OM-1	The Proponents will comply with the road maintenance standards of the federal or state agency controlling the land.		•	•	•	•	•
OM-2	OM-2	Roads will be maintained to have crossroad drainage in order to minimize the amount of channeling or ditches needed. Water bars will be installed at all alignment changes (curves), significant grade changes, and as requested by the federal or state agency.			•	•	•	•
OM-3	OM-3	All access road drainage structures, constructed and installed for Proponent use only, will be maintained or repaired by the Proponents during O&M activities or emergency response.			•	•	•	•
OM-4	OM-4	Although routine and corrective O&M is of limited duration and impact, the Proponents will attempt to adhere to specific closure periods and areas and are proposing not to conduct any routine and corrective O&M activities during the timeframes and at the locations identified in Table R-1 in Appendix R of the Plan of Development to the greatest extent practical. The appropriate federal or state agency will notify the Proponents of any spatial or temporal restrictions that are in effect for the Project area (e.g., fire restrictions).		•	•	•	•	
OM-5	OM-5	Existing improvements (fences, gates, etc.) will be repaired or replaced if they are damaged by O&M activities, as agreed to by the parties involved.			•	•	•	•
OM-6	OM-6	The Agencies may restrict general public access to closed federal or state roads and		•	•	•	•	

Table Z-1. Companies' Proposed Environmental Protection Measures

GATEWAY WEST TRANSMISSION LINE PROJECT

1	2	3	4-6			7-9		
			Application Phase			Applicable to Land Ownership[1/]		
DEIS Number	New EPM Number for FEIS Submittal	Environmental Protection Measures	Design and Engineering	Construction	Operations and Maintenance	Federal Land and all land in Wyoming and Idaho Segments 6, 8 and 9	State Land in Idaho	Private Land in Idaho Segments 4, 5, 7, and 10
		access roads that the Proponents maintain (Proponents will maintain access roads constructed for Proponent use only). In cases of restricted access, the Proponents will physically close the road with a gate. Gates will be locked with both a lock supplied by the Proponents and with a federal agency lock. This access management plan will be updated as necessary to reflect current road closures and gate locations.						
OM-8	OM-7	Any integrated vegetation management (IVM) control method, including those listed on pages 9 and 10 in Appendix R of the Plan of Development, may be used to control the growth of trees and tall shrubs to maintain clearances, the IVM recommended wire and border zones as indicated in Table R-2 [page 10 in Appendix R of the Plan of Development] and improve access to facilities.			•	•	•	•
OM-9	OM-8	Any IVM control method including those listed on pages 9 and 10 in Appendix R of the Plan of Development may be used to control the growth of additional vegetation to maintain clearances, the IVM recommended wire and border zones as indicated in Table R-2 [page 10 in Appendix R-1], and improve access to facilities.			•	•	•	•
OM-10	OM-9	Where possible, low-growing vegetation and small tree species within the ROW that will not grow into the minimum required clearance distance will be left in place; trees may be removed on a subsequent maintenance cycle as they increase in size. Hazard trees are typically those trees or snags within or adjacent to the ROW that are likely to interfere with or fall into transmission lines or associated facilities. Hazard trees and other "hot spots" (high priority areas requiring vegetation management actions) are identified during routine line inspections and removed annually. In addition to hazard trees, other critical conditions that may require immediate attention include trees that interfere with transmission conductors and trees whose growth will not allow safe clearance until the next scheduled maintenance cycle.			•	•	•	•
OM-11	OM-10	Any control method may be used for vegetation maintenance on access roads; this is typically scheduled at the same time as vegetation maintenance within the ROW. However, in cases where vegetation grows quickly, removal may occur annually. Vegetation that will not interfere with the safe operation of vehicles and equipment will be left in place.			•	•	•	•

Table Z-1. Companies' Proposed Environmental Protection Measures

GATEWAY WEST TRANSMISSION LINE PROJECT

1	2	3	4-6			7-9		
			Application Phase			Applicable to Land Ownership[1/]		
DEIS Number	**New EPM Number for FEIS Submittal**	**Environmental Protection Measures**	**Design and Engineering**	**Construction**	**Operations and Maintenance**	**Federal Land and all land in Wyoming and Idaho Segments 6, 8 and 9**	**State Land in Idaho**	**Private Land in Idaho Segments 4, 5, 7, and 10**
OM-12	OM-11	Slash will be lopped and scattered throughout the surrounding land. Stumps resulting from vegetation treatments will not be over 1 foot tall (unless the tree is not able to be safely cut at or below one foot from the ground surface), and lopped slash will be left as close to the ground as possible. Lopped slash will be a maximum of 18 inches in length for small trees and limb wood. If the federal land managing agency determines that fuel levels are unacceptable, they shall notify the Proponents and develop a mutually agreed upon method to reduce fuels. This may include, but is not limited to, chipping.			•	•	•	•
OM-13	OM-12	Hazard trees will be felled in a direction away from the ROW. Slash and limbs that fall within the ROW will be treated as described above; boles of trees greater than 8 inches will be left in place.			•	•	•	•
OM-14	OM-13	Any chemical control will be done in accordance with any applicable local, state, and federal rules and regulations. Herbicides or other chemical control will be selected from the BLM and Forest Service's list of previously approved herbicides and in accordance with any herbicide plans. If the federal land managing agency determines that a previously approved herbicide and/or plan is unacceptable, they shall notify the Proponents.			•	•	•	•
OM-16	OM-14	Before beginning an O&M project on federal or state land, the Proponents or their subcontractors will clean all equipment that will operate off-road or disturb the ground. Tracks, skid plates, and other parts that can trap soil and debris will be removed for cleaning when feasible, and the entire vehicle and equipment will be cleaned at an off-site location.			•	•	•	•
OM-17	OM-15	To help limit the spread and establishment of noxious weed species in disturbed areas, desired vegetation needs to be established promptly after disturbance. The Proponents will rehabilitate significantly disturbed areas as soon as possible after ground-disturbing activities and during the optimal period. Seed and mulch will be certified "noxious weed free" and seed mix will be agreed to in advance by the landowner or land managing agency.			•	•	•	•
OM-18	OM-16	Routine and corrective O&M activities in streams with sensitive fish species will occur from July 1 to September 1 in an effort to minimize impact to spawning and migration activities. These activities include, but are not limited to, culvert installation and or replacement, stream bank stabilization. Fording streams at existing crossings on existing roads (e.g., dip, culvert, bridge) will occur as necessary throughout the year.			•	•	•	•
OM-19	OM-17	Woody vegetation management within 50 feet of streams will be conducted by hand crews.			•	•	•	•

Table Z-1. Companies' Proposed Environmental Protection Measures

GATEWAY WEST TRANSMISSION LINE PROJECT

1	2	3	4-6			7-9		
			Application Phase			Applicable to Land Ownership[1/]		
DEIS Number	**New EPM Number for FEIS Submittal**	**Environmental Protection Measures**	**Design and Engineering**	**Construction**	**Operations and Maintenance**	**Federal Land and all land in Wyoming and Idaho Segments 6, 8 and 9**	**State Land in Idaho**	**Private Land in Idaho Segments 4, 5, 7, and 10**
OM-20	OM-18	Herbaceous plants and low-growing shrubs will be left in place if they do not interfere with the safe O&M of Project lines and equipment as described in Table R-2 in Appendix R of the Plan of Development.			•	•	•	•
OM-21	OM-19	The Proponents will use existing stream crossings or new, permanent crossings that were approved as part of the Project, and will not create additional crossings without prior agency permitting and approval.			•	•	•	•
OM-22	OM-20	Only herbicides approved by the land managing agency as safe to use in aquatic environments and reviewed by the Proponents for effectiveness will be used within 100 feet of sensitive aquatic resources.			•	•		
OM-23	OM-21	Prior to the start of O&M activities, all supervisory personnel will be instructed on the protection of natural resources, including sensitive plant and wildlife species and habitats. If a contractor is used, the construction contract will address (a) the sensitive plant species that may be present in a particular area based on previous surveys and literature review; (b) the federal and state laws regarding protection of plants and wildlife; (c) the importance of these resources; (d) the purpose and necessity of protecting them; and (e) methods for protecting sensitive resources (e.g., Endangered Species Act, Migratory Bird Treaty Act, Bald and Golden Eagle Protection Act, and BLM wildlife policy).			•	•	•	•
OM-24	OM-22	Sensitive plant populations that occur within or near the ROW and work areas will be marked on the ground, where practical, to ensure that they are avoided. If species are discovered during the work, the Proponents will establish a spatial buffer zone, will contact the appropriate Agency within 24 hours, and will continue with the O&M activities outside of the established buffer unless otherwise directed. The Agency may evaluate the adequacy of the buffer on a case-by-case basis. Unless the Proponents are informed otherwise, work outside of the buffer area will continue. If the Proponents need to work within the buffer area, the Agencies and Proponents will work together to develop a solution that is acceptable to both parties and will allow for the Proponents to complete the work in a timely manner or within the scheduled outage window, if applicable. After the project is complete or no longer poses a threat to the plant population, the marking (stakes), if used, will be promptly removed to protect the site's significance and location from unwanted attention. As needed, marking will be reinstated during the land rehabilitation period.			•	•		

Table Z-1. Companies' Proposed Environmental Protection Measures

GATEWAY WEST TRANSMISSION LINE PROJECT

1	2	3	4-6			7-9		
			Application Phase			Applicable to Land Ownership[1/]		
DEIS Number	**New EPM Number for FEIS Submittal**	**Environmental Protection Measures**	**Design and Engineering**	**Construction**	**Operations and Maintenance**	**Federal Land and all land in Wyoming and Idaho Segments 6, 8 and 9**	**State Land in Idaho**	**Private Land in Idaho Segments 4, 5, 7, and 10**
OM-25	OM-23	If sensitive wildlife species are discovered during O&M activities, and the animals are not directly within ground disturbance areas, they will be protected by marking the edges of the ROW and new access roads in the general vicinity to ensure that workers do not leave those areas. If the animals are within work areas that have, or will have, ground disturbance, the Proponents will establish an appropriate buffer zone and will contact the federal or state land manager immediately. The federal or state agency may evaluate the adequacy of the buffer on a case by case basis. Unless the Proponents are informed otherwise, work outside of the buffer area will continue. If the Proponents need to work within the buffer area, the Agencies and Proponents will work together to develop a solution that is acceptable to both parties and will allow for the Proponents to complete the work in a timely manner or within the scheduled outage window, if applicable. After the O&M activities are completed, or no longer pose a threat to the species, the marking (stakes) will promptly be removed to protect the site's significance and location from unwanted attention. As needed, marking will be reinstated during the land rehabilitation period.			•	•	•	•
OM-28	OM-24	The Proponents will provide crews and contractors with maps showing avoidance areas; these maps will include work zones as well as ROW areas where overland travel will be avoided.			•	•	•	•
OM-29	OM-25	In the event any sensitive plants require relocation, permission will be obtained from the federal agency. If avoidance or relocation is not practical, the topsoil surrounding the plants will be salvaged, stored separately from subsoil, and respread during the restoration process.			•	•		
OM-30	OM-26	If sensitive wildlife species are killed or injured due to O&M activities, the appropriate federal agency will be notified.			•	•		
OM-31	OM-27	All on-site personnel will be made aware that all birds of prey are protected by federal and state laws.			•	•	•	•
VISUAL								
VR-1	VIS-1	The 500-kV transmission line lattice steel towers will be specified to have a dull galvanized finish. The proposed surface finish is a galvanized finish, treated after the initial galvanizing process to produce a dulled finish to reduce surface reflectivity. This process results in an installed tower with more visual absorption and thus allows the towers to blend in better with the landscape.	•			•	•	•

Table Z-1. Companies' Proposed Environmental Protection Measures

GATEWAY WEST TRANSMISSION LINE PROJECT

1	2	3	4-6			7-9		
			Application Phase			Applicable to Land Ownership[1/]		
DEIS Number	**New EPM Number for FEIS Submittal**	**Environmental Protection Measures**	**Design and Engineering**	**Construction**	**Operations and Maintenance**	**Federal Land and all land in Wyoming and Idaho Segments 6, 8 and 9**	**State Land in Idaho**	**Private Land in Idaho Segments 4, 5, 7, and 10**
VR-2	VIS-2	The three subconductor (500-kV) and two subconductor (230-kV) that make up the conductor bundles would be specified to have a non–specular finish. Similar to the dulled finish of the transmission structures, the conductors reduce surface reflectivity. This process results in eliminating the shiny ribbon effect often seen in older untreated transmission lines and thus allows the conductors to blend in better with the landscape.	•			•	•	•
VR-3	VIS-3	The proposed 230-kV transmission lines between Windstar and Aeolus would use a steel H-frame structure configuration similar to the existing 230-kV in the same general location. The steel pole H-frame would utilize self-weathering steel. Self-weathering steel is manufactured from a group of steel alloys that were developed to eliminate the need for painting. This type of steel alloy forms a stable rust-like appearance if exposed to the weather for several years. In areas where the 230-kV structures are skylined, dull galvanized steel will be considered to minimize visual impacts. Dulled galvanized steel has a galvanized finish, treated after the initial galvanizing process to produce a dulled finish to reduce surface reflectivity. This process results in an installed tower with more visual absorption and thus allows the towers to blend in better with the terrain, while at the same time preserving the corrosion resistant properties of the galvanized coating on the steel.	•			•	•	•
VIS-1	VIS-4	No paint or permanent discoloring agents would be applied to rocks or vegetation to indicate limits of survey or construction activity except as required under the timber sale contracts.		•		•	•	•
VIS-2	VIS-5	To minimize ground disturbance and/or reduce scarring (visual contrast) of the landscape, the alignment of any new access roads or cross-country routes will follow the landform contours where practicable, providing that such alignment does not impact resource values additionally or result in new impacts to resources that were previously avoided.	•	•		•	•	•
VIS-3	VIS-6	To minimize sensitive feature disturbance and/or visual contrast in designated areas on federal lands, structures will be placed so as to avoid sensitive features such as, but not limited to, riparian areas, water courses and cultural sites and/or to allow conductors to clearly span the features, within the limits of standard tower design. Where conflicts arise between resources, the applicable land manager will be consulted.	•	•		•		
VIS-4	VIS-7	To reduce visual impacts on federal land, including potential impacts on recreation values and safety, towers will be placed at the maximum feasible distance from the	•	•		•		

Table Z-1. Companies' Proposed Environmental Protection Measures

GATEWAY WEST TRANSMISSION LINE PROJECT

1	2	3	4-6			7-9		
			Application Phase			Applicable to Land Ownership[1/]		
DEIS Number	**New EPM Number for FEIS Submittal**	**Environmental Protection Measures**	**Design and Engineering**	**Construction**	**Operations and Maintenance**	**Federal Land and all land in Wyoming and Idaho Segments 6, 8 and 9**	**State Land in Idaho**	**Private Land in Idaho Segments 4, 5, 7, and 10**
		highway, canyon and trail crossings within limits of standard design and to the extent practical.						
VIS-5	VIS-8	Crossings of rivers shall be at approximately right angles where practical. Strategic placement of structures will be done both as a means to screen views of the transmission line and rights-of-way and to minimize the need for vegetative clearing.	•	•		•	•	•
VIS-6	VIS-9	Insulators will be made of materials that have reduced potential to reflect and refract light. Glass insulators that are highly reflective will not be permitted in scenic areas on federally managed lands. .	•	•		•		
VIS-7	VIS-10	For segments of the line 1) within the 0- to 0.5-mile zone of Interstate highways where existing lines of the same voltage are paralleled and 2) within the 0- to 0.5-mile zone of residences where existing lines of the same voltage are paralleled, new towers will be located adjacent to existing towers, within the limits of standard transmission line design and considering the ruling span length of adjacent proposed and existing lines.	•	•		•	•	•
VIS-8	VIS-11	Site-specific "micrositing," within the limits of standard engineering design, will be required near certain sensitive areas, as identified by the agencies, where proposed transmission facilities would impact visual quality; these situations include: • Crossings over major highways; • Crossings of high quality historic trails; • Crossings over the North Platte and Snake Rivers; • Sensitive travelways, use areas, residential areas, recreational facilities as identified by the agencies (including national recreation and scenic trails, campgrounds, recreation areas, and trailheads), and other areas identified by management plans; and • To avoid bisecting forest patches within the Sawtooth NF. The Proponents will consult with the applicable local land management agency during transmission line design.	•	•		•		
VIS-11	VIS-12	The lighting specified for the marshaling yards will be the minimum required to meet safety and security standards. All light fixtures within 1,000 feet of a residence will be hooded to eliminate any potential for glare and to prevent light from spilling off the site or up into the sky. Additionally, the fixtures will have sensors and switches to permit the lighting to be turned off at times when it is not required.		•		•	•	•

Table Z-1. Companies' Proposed Environmental Protection Measures

GATEWAY WEST TRANSMISSION LINE PROJECT

1	2	3	4-6			7-9		
			Application Phase			Applicable to Land Ownership[1/]		
DEIS Number	**New EPM Number for FEIS Submittal**	**Environmental Protection Measures**	**Design and Engineering**	**Construction**	**Operations and Maintenance**	**Federal Land and all land in Wyoming and Idaho Segments 6, 8 and 9**	**State Land in Idaho**	**Private Land in Idaho Segments 4, 5, 7, and 10**
VIS-13	VIS-13	To reduce visual contrast in areas where overstory vegetation is removed for access, tower pads, or conductor clearance, specific sections of the right-of-way on federal land will have uneven edges (trees will be removed from the edge of the right-of-way out or away from the right-of-way boundary) to give a natural appearance, where not in conflict with regulatory requirements (e.g., NERC, WECC, and Occupational Safety and Health Administration requirements). This will be a onetime application and conducted with agency approval.	•	•	•	•		
VIS-15	VIS-14	To mitigate potential visual impacts on federal land, the construction and maintenance plan to be developed by the Proponents will include measures to reduce ROW scarring and enhance restoration. The plan will be approved by the land management agency prior to ground clearing and construction.	•		•	•		
CULTURAL								
CUL-1	CR-1	All work conducted in accordance with the Historic Properties and Trails Plan (HPTP) will be performed by qualified paleontologists and archeologists with trained assistants.		•		•	•	•
CUL-2	CR-2	An Unanticipated Discovery Plan will be included as part of the HPTP. This plan will specify what steps will be taken if a subsurface cultural resource or fossil is discovered during construction, including stopping construction in the vicinity of the find, notification of the appropriate land management agency, identification of a qualified archaeologist or paleontologist to conduct an evaluation of the find, and the development of an approved data recovery program or other mitigation measures.		•		•	•	•
CUL-3	CR-3	The Cultural Resource and Paleontological Monitoring and Mitigation Plan will include provisions for the preparation and curation of any fossil collections from federal lands and for the preparation of a final report based on the data recovered for activities on federal lands.		•		•		
CUL-4	CR-4	Literature reviews and Class III surveys will be completed for cultural resources. A literature review will be conducted on public and private lands and will cover a study area of one-half mile on either side of the proposed and alternate transmission line alignments as well as areas identified for use as staging areas and access roads. Class III surveys covering a 500-foot-wide area centered on the transmission line will be conducted on 100 percent of federal and state lands, and for those private lands for which survey access is granted, prior to the completion of the NEPA process. A good-faith effort will be made to obtain survey permission prior to the completion of the NEPA process.	•			•	•	•

Table Z-1. Companies' Proposed Environmental Protection Measures

GATEWAY WEST TRANSMISSION LINE PROJECT

1	2	3	4-6			7-9		
			Application Phase			Applicable to Land Ownership[1/]		
DEIS Number	**New EPM Number for FEIS Submittal**	**Environmental Protection Measures**	**Design and Engineering**	**Construction**	**Operations and Maintenance**	**Federal Land and all land in Wyoming and Idaho Segments 6, 8 and 9**	**State Land in Idaho**	**Private Land in Idaho Segments 4, 5, 7, and 10**
CUL-5	CR-5	If construction will adversely affects any properties listed on, or eligible for listing on, the NRHP, mitigation will be required. Mitigation will be in accordance with the HPTP and may include, but not be limited to, one or more of the following measures: a) avoidance through the use of relocation of structures through the design process, realignment of the route, relocation of temporary workspace, or changes in the construction and/or operational design; b) data recovery, which may include the systematic professional excavation of an archaeological site or the preparation of photographic and/or measured drawings documenting standing structures; and c) the use of landscaping or other techniques that will minimize or eliminate effects on the historic setting or ambience of standing structures.		•		•	•	•
CUL-6	CR-6	Avoidance areas will be flagged prior to construction activities. Flagging will be removed once construction is completed in an area.		•		•	•	•
CUL-7	CR-7	To minimize unauthorized collecting of archaeological material or vandalism to known archaeological sites, all workers will attend mandatory training on the significance of cultural resources and the relevant federal regulations intended to protect them.		•		•	•	•
CUL-8	CR-8	If human remains are discovered, construction will be halted and the coroner will be notified and measures specified in the HPTP will be followed.		•		•	•	•
CR-5	CR-9	On NFS lands, a management plan should be developed for each historic property nominated to the NRHP. The plan should be drafted during the nomination process. The National Heritage Strategy should be used to guide decisions on issues related to the Heritage Program.	•		•	•		
RECLAMATION								
REC-1	REC-1	Proponent personnel and their contractors will be trained on noxious and invasive weed identification to facilitate avoidance of infestations where possible or identification of new infestations.			•	•	•	•
REC-2	REC-2	Pre-construction weed treatment would be conducted prior to the start of ground-disturbing activities and at the time most appropriate for the target species.		•		•	•	•
REC-3	REC-3	Pre-construction weed treatment would be limited to the areas that are expected to have surface-disturbing activities. The final Reclamation Plan will include a schedule showing the phased in-service dates for different segments. Pre-construction weed treatment will be scheduled accordingly.		•		•	•	•

Table Z-1. Companies' Proposed Environmental Protection Measures

GATEWAY WEST TRANSMISSION LINE PROJECT

1	2	3	4-6			7-9		
			Application Phase			Applicable to Land Ownership[1/]		
DEIS Number	**New EPM Number for FEIS Submittal**	**Environmental Protection Measures**	**Design and Engineering**	**Construction**	**Operations and Maintenance**	**Federal Land and all land in Wyoming and Idaho Segments 6, 8 and 9**	**State Land in Idaho**	**Private Land in Idaho Segments 4, 5, 7, and 10**
REC-4	REC-4	Pre-construction treatment may use mechanical control, hand spraying, grazing, or herbicides. The final Reclamation Plan will discuss those options, as applicable.		•		•	•	•
REC-5	REC-5	All herbicide applications would comply with label restrictions, federal, state and/or county regulation, the Proponents' specifications and landowner agreements. No spraying would occur prior to notification of the applicable land management agency. On federal or state controlled lands, a herbicide use plan will be submitted prior to any herbicide application as recommended in the BLM herbicide EIS (http://www.blm.gov/wo/st/en/prog/more/veg_eis.html). The herbicide use plan will include the dates and locations of application, target species, herbicide, adjuvants, and application rates and methods (e.g., spot spray vs. boom spray). No herbicide would be applied to any private property without written approval of the landowner. The final Reclamation Plan will contain a list of herbicides that may be used, target species, best time for application, application rates, and if they are approved for use on BLM-managed and NFS lands.		•		•	•	•
REC-6	REC-6	Herbicides may be applied using a broadcast applicator mounted on a truck or all-terrain vehicle (ATV), backpack sprayers, or with hand sprayers as conditions dictate. Herbicide applications would be conducted only by licensed operators or under the supervision of a licensed operator. Where allowed, a broadcast applicator would likely be used. In areas where noxious weeds are more isolated and interspersed with desirable vegetation, noxious and invasive weeds would be targeted, thereby avoiding other plants. Pre-construction herbicide applications would not occur adjacent to known special status species or near water bodies.		•		•	•	•
REC-7	REC-7	All areas treated would be documented using GPS technologies and included in the annual report.			•	•	•	•
REC-8	REC-8	Areas of existing noxious weeds and invasive species will be avoided where possible.		•	•	•	•	•
REC-9	REC-9	Project vehicles will arrive at the job site clean of all soil and herbaceous material.		•	•	•	•	•
REC-10	REC-10	When the contractors demobilize from the job site where identified infestations of noxious weeds are present, they will use appropriate decontamination measures as defined in the final Reclamation Plan.		•	•	•	•	•
REC-11	REC-11	Soil stockpiles from areas that did not have noxious weeds or invasive species present, will not be placed adjacent to populations of noxious weeds or invasive species, where practicable.		•		•	•	•

Table Z-1. Companies' Proposed Environmental Protection Measures

GATEWAY WEST TRANSMISSION LINE PROJECT

1	2	3	4-6			7-9		
			Application Phase			Applicable to Land Ownership[1/]		
DEIS Number	**New EPM Number for FEIS Submittal**	**Environmental Protection Measures**	**Design and Engineering**	**Construction**	**Operations and Maintenance**	**Federal Land and all land in Wyoming and Idaho Segments 6, 8 and 9**	**State Land in Idaho**	**Private Land in Idaho Segments 4, 5, 7, and 10**
REC-12	REC-12	Areas disturbed by Project activities are susceptible to the establishment and spread of noxious weeds. Erosion control measures identified in the SWPPP(s) would also assist in preventing the establishment of weeds on exposed soils.		•		•	•	•
REC-13	REC-13	Project-related storage and staging yards, fly yards, and other areas that are subject to regular long-term disturbance will be kept weed-free through regular site inspections and herbicide applications, subject to the consent of the land owner.		•		•	•	•
REC-14	REC-14	Where pre-construction surveys have identified noxious or invasive weed species infestations, topsoil and other soils will be placed next to the infested area and clearly identified as coming from an infested area. Topsoil would be returned to the area it was taken from and will not be spread in adjacent areas. If the topsoil is not suitable for backfill, then it will be spread in another previously disturbed area and clearly identified for future weed treatments as applicable.		•		•	•	•
REC-15	REC-15	Straw or hay that may be used as a BMP to control erosion and sedimentation must be certified weed free. If certified weed-free materials are not available, then alternative BMPs will be used. The use of alternative BMPs will be coordinated with the construction storm water inspector.		•		•	•	•
REC-16	REC-16	The topsoil layer will be removed, taking care not to mix it with the underlying sub-soil. Where topsoil separation is employed, topsoil will be stored in a separate stockpile.		•		•	•	•
REC-17	REC-17	Certified weed-free straw, mulch, gravel, and other BMPs as appropriate, will be used as described in the SWPPP to stabilize the stockpile and limit erosion and standing water, control dust, and control the establishment of noxious or invasive weeds in stockpiled soils.		•		•	•	•
REC-18	REC-18	Topsoil and sub-surface soils will be replaced in the proper order during reclamation.						
REC-19	REC-19	Where it is necessary to spread soils (subsurface soils or waste rock resulting from excavations or foundation drilling), it will be done where practicable and in close proximity to where the disturbance occurred (within the ROW). Material will be spread uniformly to match existing contours and covered with topsoil when available and reseeded.		•		•	•	•

Table Z-1. Companies' Proposed Environmental Protection Measures

GATEWAY WEST TRANSMISSION LINE PROJECT

1	2	3	4-6			7-9		
			Application Phase			Applicable to Land Ownership[1/]		
DEIS Number	**New EPM Number for FEIS Submittal**	**Environmental Protection Measures**	**Design and Engineering**	**Construction**	**Operations and Maintenance**	**Federal Land and all land in Wyoming and Idaho Segments 6, 8 and 9**	**State Land in Idaho**	**Private Land in Idaho Segments 4, 5, 7, and 10**
REC-20	REC-20	Temporarily disturbed lands within the ROW will be re-contoured to blend with the surrounding landscape. Re-contouring will emphasize restoration of the existing drainage patterns and landform to pre-construction conditions, to the extent practicable. (Tower pads would not be recontoured.)		•		•	•	•
REC-21	REC-21	De-compaction: Areas within the ROW, laydown or staging yards, and other areas of extensive vehicle travel will typically contain compacted soils. These soils will be de-compacted on a case-by-case basis through negotiation with the landowner or land management agency.		•		•	•	•
REC-22	REC-22	Final Cleanup: Final cleanup will ensure that all construction areas are free of any construction debris including but not limited to: assembly scrap metals, oil or other petroleum-based liquids, construction wood debris, and worker-generated litter. Permanent erosion control devices will be left in place.		•		•	•	•
REC-23	REC-23	The Proponents will utilize soil amendments (e.g., fertilizer, wood or straw mulches, tackifying agents, or soil stabilizing emulsions) on a case-by-case basis and with landowner or land management agency approval. Specific soil amendments will be identified in the final Reclamation Plan and be consistent with the SWPPP.		•		•	•	•
REC-24	REC-24	Broadcast seeding will apply the seed directly on the ground surface. The type of broadcast spreader will depend on the size of the area to be seeded, and the terrain. Seed will be placed in direct contact with the soil, ideally at a depth of approximately 0.5 to 1-inch deep. It will then be covered by raking or dragging a chain or harrow over the seed bed; to remove air pockets.		•		•	•	•
REC-25	REC-25	Drill seeding would be used on areas of sufficient size with moderate or favorable terrain to accommodate mechanical equipment. Drill seeding provides the advantage of planting the seed at a uniform depth.		•		•	•	•
REC-26	REC-26	Hydroseeding, which is the spraying of seeds and water onto the ground surface, or hydroseeding/hydromulching, which is the spraying of seeds, mulch and water, may be implemented on steeper slopes. Tackifier may be added to facilitate adherence of hydromulch to slopes greater than 25 percent.		•		•	•	•
VEGETATION								
REC-2–17, 23–26	REC-2–17, 23–26	(Described under Reclamation)						

Table Z-1. Companies' Proposed Environmental Protection Measures

GATEWAY WEST TRANSMISSION LINE PROJECT

1	2	3	4-6			7-9		
			Application Phase			Applicable to Land Ownership[1/]		
DEIS Number	**New EPM Number for FEIS Submittal**	**Environmental Protection Measures**	**Design and Engineering**	**Construction**	**Operations and Maintenance**	**Federal Land and all land in Wyoming and Idaho Segments 6, 8 and 9**	**State Land in Idaho**	**Private Land in Idaho Segments 4, 5, 7, and 10**
VEG-2	VEG-1	During construction, blading of native plant communities should be minimized, consistent with safe construction practices. Where feasible, shrubs should be cut at or near ground level to facilitate re-growth after construction. The footprint of construction and operations facilities should be kept to the minimum necessary.		•		•	•	•
VEG-3	VEG-2	Where feasible, locate new access roads to minimize the number of trees removed during construction . However, new access roads will not be relocated if the change would result in an increase in the overall disturbance (acres); require additional cut and fill activities, or impact other sensitive resources (e.g., sagebrush plant community, sensitive species habitat, and/or cultural resources or viewshed).	•			•		
VEG-4	VEG-3	In areas where revegetation would be completed, topsoil salvage and replacement should be used for all areas of cut or fill areas and for areas larger than 1 acre where soils would be disturbed during construction.			•	•	•	•
VEG-8	VEG-4	Prior to the start of construction and maintenance activities, all contractor vehicles and equipment (including personal protective equipment) will be cleaned of soil and debris capable of transporting invasive plant seeds or other propagates. All vehicles and equipment will be inspected by Agency-approved inspectors and certified as weed free by agency approved personnel, in order to ensure they have been cleaned properly. The final Reclamation and Noxious Weed Plans will include the location of all cleaning stations, how materials cleaned from vehicles at these stations will be either captured or treated so that cleaning station locations would not also become infected, and who would confirm/certify that vehicles leaving cleaning stations and/or entering construction sites are free of invasive plant materials.		•		•	•	•
VEG-9	VEG-5	The Agency-approved Environmental Construction Inspection Contractor (CIC) will approve weed-free straw or other erosion control materials on federally managed lands prior to application.		•		•		
VEG-10	VEG-6	The Proponents will consult with the appropriate land management agency to determine tree seedlings to be planted in decommissioned roadbeds and other temporarily disturbed areas on federally managed lands (where trees were removed) to assure seedlings are matched to site conditions.			•	•		
VEG-11	VEG-7	The Proponents will notify the Forest Service when topsoil salvage operations are scheduled and seek assistance with field identification of top soil material.	•	•		•		

Table Z-1. Companies' Proposed Environmental Protection Measures

GATEWAY WEST TRANSMISSION LINE PROJECT

1	2	3	4-6			7-9		
			Application Phase			Applicable to Land Ownership[1/]		
DEIS Number	**New EPM Number for FEIS Submittal**	**Environmental Protection Measures**	**Design and Engineering**	**Construction**	**Operations and Maintenance**	**Federal Land and all land in Wyoming and Idaho Segments 6, 8 and 9**	**State Land in Idaho**	**Private Land in Idaho Segments 4, 5, 7, and 10**
VEG-12	VEG-8	Annual post-construction monitoring and treatment of invasive plants on closed roads (access roads dedicated for use by Proponents only), temporary roads, fly yards, and other disturbed areas in the ROW shall continue for 3 years in areas where infestations or populations of noxious weeds have been identified. If after 3 years post-construction conditions are not equivalent to or better than pre-construction conditions (in accordance with applicable permit), monitoring and treatment will continue until these conditions are met. If adjacent land uses are contributing to the introduction and/or persistence of invasive plant species within areas disturbed by the project, then Proponents will not be required to treat noxious weeds for more than three years.			•	•		
VEG-13	VEG-9	The Proponents will meet the terms and stipulations within the timber sale contracts for timber removal operations on the Medicine Bow-Routt, Caribou-Targhee, and Sawtooth NFs.		•		•		
TES-PLANTS								
OM-23–24 and 28–29	OM-21–22 and 24–25	(Described under Operations and Maintenance.)						
PPC-1	TESPL-1	Blowout Penstemon – Surface disturbance will be allowed in suitable habitat where species-specific surveys have determined that no populations are present. The species-specific surveys will be conducted the year prior to construction, and the proposed disturbance areas will be redesigned to avoid direct impact to populations.		•		•		
PPC-2	TESPL-2	Colorado Butterfly Plant – Surface disturbance will be allowed in suitable habitat where species-specific surveys have determined that no populations are present. The species-specific surveys will be conducted the year prior to construction, and the proposed disturbance areas will be redesigned to avoid direct impact to populations.		•		•		
TESPL-3	TESPL-3	Qualified botanists shall conduct pre-construction surveys during a season when target species are readily identifiable for special status or globally rare species. Where feasible, micrositing of project facilities shall avoid direct impacts to identified populations. Survey reports documenting the surveys, their results, and recommendations must be provided to land management agency for approval prior to construction. Agency botanists may evaluate individual sites based on site-specific conditions. Documentation of the evaluation of avoidance of impacts to sensitive and globally rare plants must be provided to the Agencies prior to construction.	•			•		
TESPL-4	TESPL-4	Slickspot Peppergrass – Environmental monitors will survey for and mark slickspots and	•	•		•	•	•

Table Z-1. Companies' Proposed Environmental Protection Measures

GATEWAY WEST TRANSMISSION LINE PROJECT

1	2	3	4-6			7-9		
			Application Phase			Applicable to Land Ownership[1/]		
DEIS Number	**New EPM Number for FEIS Submittal**	**Environmental Protection Measures**	**Design and Engineering**	**Construction**	**Operations and Maintenance**	**Federal Land and all land in Wyoming and Idaho Segments 6, 8 and 9**	**State Land in Idaho**	**Private Land in Idaho Segments 4, 5, 7, and 10**
		aboveground populations of slickspot peppergrass within 50 feet of the construction area prior to ground disturbance (including roads) in potential or occupied slickspot peppergrass habitat. No construction shall occur within 50 feet of any slickspot peppergrass plants or slickspots found by the environmental monitor. Also, construction shall not occur within 50 feet of previously known occupied slickspot peppergrass areas, based on Idaho CDC data, even if aboveground plants are not observed by the environmental monitor. Within proposed critical habitat, impacts to Primary Constituent Elements, such as native sagebrush/forb vegetation, will be avoided to the extent practicable. Seeding during reclamation in areas of suitable habitat will use methods that minimize soil disturbance such as no-till drills or rangeland drills with depth bands. Reclamation will use certified weed-free native seed. Excess soils will not be stored or spread on slickspots.						
TESPL-6	TESPL-5	Sand dune and cushion plant communities should be avoided, where feasible.	•	•		•		
TESPL-1	TESPL-6	Goose Creek Milkvetch – Surface disturbance will be allowed in suitable habitat for Goose Creek milkvetch where species-specific surveys have determined that no populations are present. The species-specific surveys will be conducted the year prior to construction, and the proposed disturbance areas will be redesigned to avoid direct impacts to populations.	•			•	•	
TESPL-3	TESPL-7	Ute Ladies'-tresses – Qualified botanists shall conduct pre-construction surveys during a season when target species are readily identifiable for special status or globally rare species. Where feasible, micrositing of project facilities shall avoid direct impacts to identified populations. Survey reports documenting the surveys, their results, and recommendations must be provided to land management agency for approval prior to construction. Agency botanists may evaluate individual sites based on site-specific conditions. Documentation of the evaluation of avoidance of impacts to sensitive and globally rare plants must be provided to the Agencies prior to construction.	•			•	•	•
WEEDS								
REC-1–15	REC-2–15	(Described under Reclamation)						
OM-14, 16–17, 22	OM-13, 14–15, 20	(Described under Operations and Maintenance)						

Table Z-1. Companies' Proposed Environmental Protection Measures

GATEWAY WEST TRANSMISSION LINE PROJECT

1	2	3	4-6			7-9		
			Application Phase			Applicable to Land Ownership[1/]		
DEIS Number	**New EPM Number for FEIS Submittal**	**Environmental Protection Measures**	**Design and Engineering**	**Construction**	**Operations and Maintenance**	**Federal Land and all land in Wyoming and Idaho Segments 6, 8 and 9**	**State Land in Idaho**	**Private Land in Idaho Segments 4, 5, 7, and 10**
WEED-1	WEED-1	The Proponents shall consult with each appropriate local land management agency (Forest Service and BLM) office to determine appropriate seed mix and commercial seed source for revegetation. The Reclamation, Revegetation, and Weed Management Plan shall specify the approved seed mixes for federal lands. Disturbed soil will not be allowed to support the growth of noxious weeds or invasive weedy species. Prevention of noxious weeds will apply to all phases of the Project.	•	•		•	•	
WEED-2	WEED-2	Weed control and prevention measures shall adhere to all agency standards and guidelines. These measures shall be developed in consultation with local, state, and federal weed agencies; all implemented measures would follow the principle of integrated weed management.		•		•	•	•
WEED-6	WEED-3	Soil stockpiles in areas containing noxious weeds and invasive plant species shall be kept separate from soil removed from areas that are free of noxious weed and invasive plant species, and the soil will be replaced in or near the original excavation. If requested by the applicable land-management agency, soil stockpiles shall be covered with plastic if the soil stockpile will be in place for two weeks or more and is not being actively used. On lands managed by the Forest Service or per private landowner request, stockpiles will not be covered with plastic.		•		•		
WETLANDS								
REC-1–22	REC-1–22	(Described under Reclamation)						
SW-1, 4–5	WQA-1, 4–5	(Described under Water Quality)						
SW-6	WQA-6	(Described under Water Quality)						
SW-7–12	WQA-13–18	(Described under Water Quality)						
WET-1	WET-1	Impacts on wetland and riparian areas will be avoided unless physically or economically infeasible or where activities are permitted. Land management agencies' plans (RMPs, MFPs, and Forest Plans) that have standards, guidelines, stipulations, or avoidance buffers will be adhered to. Where these do not exist, Inland Fish Strategy (INFISH) buffers will be followed,	•			•		
WET-2	WET-2	Wetland delineations will be performed prior to construction to support CWA Section 404 permitting and to minimize Project impacts. The delineation will identify both wetland and non-wetland waters of the United States that would be affected by the Project.	•			•	•	•
WET-3	WET-3	Where impacts on wetlands are not avoidable, site-specific crossing plans and measures	•			•	•	•

Table Z-1. Companies' Proposed Environmental Protection Measures

GATEWAY WEST TRANSMISSION LINE PROJECT

1	2	3	4-6			7-9		
			Application Phase			Applicable to Land Ownership[1/]		
DEIS Number	**New EPM Number for FEIS Submittal**	**Environmental Protection Measures**	**Design and Engineering**	**Construction**	**Operations and Maintenance**	**Federal Land and all land in Wyoming and Idaho Segments 6, 8 and 9**	**State Land in Idaho**	**Private Land in Idaho Segments 4, 5, 7, and 10**
		to mitigate impacts will be submitted to the appropriate regulatory agency, as well as the land managing agency. The Proponents will obtain all necessary permits prior to discharging dredged or fill material to waters of the U.S. and state.						
WET-4	WET-4	To meet USACE requirements for CWA 404 permitting, the Proponents will submit a mitigation plan that is accepted by the USACE. The framework for this plan is included in the Final EIS.	•			•	•	•
FISH								
OM-18	OM-16	(Described under Operation and Maintenance)						
BLA-2	BLA-2	(Described under Public Safety)						
FISH-1	FISH-1	On BLM-administered land, all culverts, whether temporary or permanent, must be designed to meet BLM Gold Book standards (Surface Operating Standards and Guidelines for Oil and Gas Exploration Development). On NFS lands, Forest Plan standards and guidelines shall apply.		•		•		
FISH-3	FISH-2	When taking water from TES fish-bearing streams for road and facility construction and maintenance activities, intake hoses shall be screened with the most appropriate mesh size (generally 3/32 of an inch), or as determined through coordination with NMFS and/or USFWS.		•	•	•	•	•
FISH-4	FISH-3	All wetlands and waters in the project area are assumed to contain aquatic invasive species and all equipment contacting water will be properly disinfected. After work is complete in a waterbody, any equipment involved in construction in that waterbody must be washed to remove any propagules of aquatic invasive species and to prevent the spread of those species to other waterbodies.		•		•	•	•
WILDLIFE								
WILD-1	WILD-1	Requests for exceptions from closure periods and areas will be submitted by the Proponents to the appropriate BLM Field Office in which the exception is requested through the Environmental Construction Inspection Contractor (CIC). Established exception processes on BLM-managed lands will be followed. The agency, the CIC, or a contractor chosen by the Proponents and approved by the agency will conduct any surveys and coordinate with any other agencies as necessary. Factors considered in granting the exception include animal conditions, climate and weather conditions, habitat conditions and availability, spatial considerations (e.g., travel routes and landscape		•	•	•		

Table Z-1. Companies' Proposed Environmental Protection Measures

GATEWAY WEST TRANSMISSION LINE PROJECT

1	2	3	4-6			7-9		
			Application Phase			Applicable to Land Ownership[1/]		
DEIS Number	**New EPM Number for FEIS Submittal**	**Environmental Protection Measures**	**Design and Engineering**	**Construction**	**Operations and Maintenance**	**Federal Land and all land in Wyoming and Idaho Segments 6, 8 and 9**	**State Land in Idaho**	**Private Land in Idaho Segments 4, 5, 7, and 10**
		connectivity), breeding activity levels, incubation or nestling stage, and timing, intensity, and duration of the Proposed action. Requests will be submitted in writing no more than 2 weeks prior to the proposed commencement of the construction period, to ensure that conditions during construction are consistent with those evaluated. The authorized officer, on a case-by-case basis, may grant exceptions to seasonal stipulations, and has the authority to cancel this exception at any time. A good faith effort will be made to act on exceptions within 5 business days of receiving a request to allow for orderly` construction mobilization. The CIC will conduct any required site visit and report the status to BLM for consideration of the decision to accept or deny the request. There is no exception process for NFS lands; all closure periods will be adhered to. Any proposed modifications to closure periods will be discussed on a case-by-case basis with the Forest Service.						
WILD-2	WILD-2	Vehicular speeds during construction and operations will be limited to 25 mph on all unsurfaced access roads. Crew and vehicle travel will be restricted to designated routes while on federally designated big game winter range (except for areas within the ROW).		•	•	•		
WILD-3	WILD-3	The Project will be designed and constructed in compliance with Avian Power Line Interaction Committee (APLIC) standards (APLIC 2006, 2012) in order to reduce impacts to avian species. Any changes to the Project's design, as requested by federal, state, or local jurisdictions, as well as any changes considered by the Proponents, will also be in compliance with APLIC guidance.	•	•	•	•	•	•
WILD-4	WILD-4	Pre-construction pedestrian or aerial nest surveys will be conducted in suitable habitat during the appropriate nesting time periods needed to identify new raptor nest locations, and to establish the status of previously identified raptor nests. Appropriate buffers will be applied to active nests during construction. All encounters of nesting raptors in the Analysis Area will be reported to the biological monitor and to appropriate agencies.		•		•		
WILD-5	WILD-5	Surveys will be conducted along the route across the Caribou-Targhee NF prior to construction for caves, abandoned mines, and adits. If suitable bat roosts are identified, the Proponents will consult with the Forest Service to determine appropriate protective measures.	•	•		•		
WILD-7	WILD-6	Guy wires will be marked with bird deterrent devices on federal lands to avoid avian collisions with structures, as directed by local land manager.	•		•	•		
WILD-8	WILD-7	Flight diverters will be installed and maintained where the transmission line crosses	•		•	•	•	•

Table Z-1. Companies' Proposed Environmental Protection Measures

GATEWAY WEST TRANSMISSION LINE PROJECT

1	2	3	4-6			7-9		
			Application Phase			Applicable to Land Ownership[1/]		
DEIS Number	**New EPM Number for FEIS Submittal**	**Environmental Protection Measures**	**Design and Engineering**	**Construction**	**Operations and Maintenance**	**Federal Land and all land in Wyoming and Idaho Segments 6, 8 and 9**	**State Land in Idaho**	**Private Land in Idaho Segments 4, 5, 7, and 10**
		rivers at the locations identified in Table 3.10-4. Additional locations may be identified by the Agencies or the Project Proponents. The flight diverters will be installed as directed in the Proponents' approved Avian Protection Plans and in conformance with the MBTA and Eagle Acts as recommended in the current collision manual of the Avian Power Line Interaction Committee (APLIC).						
WILD-9	WILD-8	Pre-construction pedestrian or aerial surveys will be completed during appropriate nesting time periods, needed to identify each raptor species. The Proponents will provide survey results to the authorized officer for approval. (See WILD-1)		•		•		
WILD-10	WILD-9	To the extent feasible, all vegetation clearing would be conducted prior to the onset of the avian breeding season (generally April 15 through July 31, depending on local conditions and federal land management plan requirements) in order to minimize impacts to migratory birds. Where this is not feasible, pre-construction surveys within the disturbance footprint shall be conducted within seven days prior to clearing. If an active nest (containing eggs or young) of a bird species protected under the MBTA is found during either pre-construction surveys or construction activities, the nest will be identified to species, inconspicuously marked, and left in place until any young have fledged before the vegetation is removed.		•		•	•	•
WILD-11	WILD-10	Snags will be maintained to the extent practical and where it does not conflict with the Proponents vegetation management specifications along the outer portions of the Project's ROW in order to reduce the impacts to habitat for cavity nesters.		•		•		
WILD-12	WILD-11	Any areas that may require blasting will be identified and a blasting plan will be submitted to the appropriate agency for approval. Blasting within 0.25 mile of a known sensitive wildlife resource will require review and approval by the appropriate agency.		•		•		
TES-WILDLIFE								
TESWL- 3	TESWL-1	H-frame structures will be equipped with anti-perch devices to reduce raven and raptor use, and limit predation opportunities on special status prey species on federally managed lands.	•	•	•	•		
TESWL-4	TESWL-2	In the event that an ESA-listed species not covered by the Biological Opinion (BO) is discovered during surveys, construction will cease, the USFWS will be notified, and Section 7 consultation will be initiated. In addition, the transmission line or structures will be relocated to minimize direct impacts to newly discovered ESA species, to the extent practical.		•	•	•	•	•

Table Z-1. Companies' Proposed Environmental Protection Measures

GATEWAY WEST TRANSMISSION LINE PROJECT

1	2	3	4-6			7-9		
			Application Phase			Applicable to Land Ownership[1/]		
DEIS Number	**New EPM Number for FEIS Submittal**	**Environmental Protection Measures**	**Design and Engineering**	**Construction**	**Operations and Maintenance**	**Federal Land and all land in Wyoming and Idaho Segments 6, 8 and 9**	**State Land in Idaho**	**Private Land in Idaho Segments 4, 5, 7, and 10**
TESWL-5	TESWL-3	Black-footed Ferret – Pre-construction surveys will be conducted for the black-tailed prairie dog (in addition to those already proposed for the white-tailed prairie dog) in Segment 1W.	•	•	•	•	•	•
TESWL-8	TESWL-4	The Environmental Construction Inspection Contractor (CIC), an agency biologist, or agency designee will accompany the Construction Contractor site engineers during the final engineering design or prior to ground-disturbing activities to verify and flag the location of any known occupied structures (e.g., nests, burrows, colonies) utilized by sensitive species. This will include, but not be limited to, artificial burrows that have been constructed as part of research/restoration efforts, prairie dog colonies, and raptor nests, which could be impacted by the Project based on the indicative engineering design. The final engineering design will be "microsited" (routed) to avoid direct impact to these occupied structures to the extent practical within engineering standards and constraints.	•			•		
TESWL-10	TESWL-5	Sharp-tailed Grouse – Proponents will provide the Agencies a list of the protocols that the Proponents will use during greater sage-grouse and sharp-tailed grouse pre-construction surveys. The Agencies will either approve these protocols, or suggest alternative protocols to be used.	•	•	•	•		
TESWL-11	TESWL-6	Sharp-tailed Grouse – In areas where sharp-tailed grouse leks occur in proximity to greater sage-grouse leks, surface disturbance will be avoided within 4 miles of occupied or undetermined greater sage-grouse leks from March 1 to July 15. In areas where sharp-tailed grouse leks occur in isolation from greater sage-grouse leks, surface disturbance will be avoided within 1.2 miles of occupied or undetermined sharp-tailed grouse leks from March 15 to July 15.	•	•	•	•		
TESWL-13	TESWL-7	Yellow-billed cuckoo - A pre-construction survey for the yellow-billed cuckoo will be conducted at any proposed crossing of suitable habitat. If these birds are detected within 1 mile of the centerline (within existing habitat), construction will not occur until the young have fledged or the nest is abandoned. The crossing-specific plan will contain proposed monitoring measures to assure compliance with this measure.	•	•	•	•		
TESWL-14	TESWL-8	Sage-Grouse – On federal lands, there will be no surface occupancy (NSO) within 0.6 mile of the perimeter (or centroid if the perimeter has not been mapped) of occupied greater sage-grouse leks located within Core areas in Wyoming, and NSO within 0.25 mile in non-Core areas (as required by BLM IM WY-2012-19 and BLM land management		•	•	•		

Table Z-1. Companies' Proposed Environmental Protection Measures

GATEWAY WEST TRANSMISSION LINE PROJECT

1	2	3	4-6			7-9		
			Application Phase			Applicable to Land Ownership[1/]		
DEIS Number	**New EPM Number for FEIS Submittal**	**Environmental Protection Measures**	**Design and Engineering**	**Construction**	**Operations and Maintenance**	**Federal Land and all land in Wyoming and Idaho Segments 6, 8 and 9**	**State Land in Idaho**	**Private Land in Idaho Segments 4, 5, 7, and 10**
		plans). "No surface occupancy," as used here, means no new surface facilities, including roads, will be placed within the NSO area. Other activities (i.e., non-surface occupancy) may be authorized, with the application of appropriate seasonal stipulations, provided the resource's protected area is not adversely affected.						
TESWL-15	TESWL-9	Sage-Grouse – On federal lands, surface disturbance will be avoided within 4 miles of occupied or undetermined greater sage-grouse leks from March 1 to July 15. This distance (i.e., 4 miles) may be reduced on a case-by-case basis by the applicable agency, if site-specific conditions would allow the Project to be located closer to the lek than 4 miles (e.g., topography prevents the Project from being visible from the lek, or a major disturbance such as a freeway or existing transmission line is located between the Project and the lek).		•	•	•		
TESWL-19	TESWL-10	Sage-Grouse – If Winter Concentration Areas for the greater sage-grouse are designated, there will be no surface disturbances within the designated areas from November 1 through March 15.		•	•	•		
TESWL-22	TESWL-11	Sage-Grouse – No structures that require guy wires will be used in occupied sagebrush obligate habitats within the area managed under the Kemmerer RMP.		•	•	•		
TESWL-17	TESWL-12	Colorado River T&E Fishes – A payment of a one-time fee, based on a fee schedule provided by the USFWS, will be made based on the amount of water used during construction of any segments that cross the Colorado River system.		•		•	•	•
TESWL-18	TESWL-13	Midget faded rattlesnake – Preconstruction surveys for occupied or potential midget faded rattlesnake hibernacula (i.e., rock outcrops with south to east aspect) will be conducted. The Proponents shall prepare a plan identifying measures to reduce impacts to midget faded rattlesnake if they are discovered. This plan shall require approval by BLM and the WGFD prior to its implementation	•	•	•	•		
PALEONTOLOGICAL RESOURCES								
CUL-9	PALEO-1	If significant fossil materials are discovered during Project construction, all surface-disturbing activities in the vicinity of the find will cease until notification to proceed is given by the authorized officer. The site will be protected to reduce the risk of damage to fossils and context. Appropriate measures to mitigate adverse effects to significant paleontological resources will be determined by the authorized officer.		•	•	•	•	•

Table Z-1. Companies' Proposed Environmental Protection Measures

GATEWAY WEST TRANSMISSION LINE PROJECT

1	2	3	4-6			7-9		
			Application Phase			Applicable to Land Ownership[1/]		
DEIS Number	**New EPM Number for FEIS Submittal**	**Environmental Protection Measures**	**Design and Engineering**	**Construction**	**Operations and Maintenance**	**Federal Land and all land in Wyoming and Idaho Segments 6, 8 and 9**	**State Land in Idaho**	**Private Land in Idaho Segments 4, 5, 7, and 10**
PALEO-1	PALEO-2	Paleontological resources (as defined by omnibus Public Land Management Act – Paleontological Resources Preservation Section) on federally managed land shall be managed and protected using scientific principles and expertise. Appropriate plans for inventory, monitoring, and the scientific and educational use of these resources shall be developed in accordance with applicable agency laws, regulations and policies.	•	•	•	•		
PALEO-2	PALEO-3	Where fossil-bearing sediments are exposed by construction, the sediments must be covered with a 4-inch layer of soil where feasible to reduce unauthorized removal or disturbance of resources.		•	•	•	•	•
GEOLOGIC HAZARDS								
BLA-1, 2	BLA-1, 2	(See description under Public Safety)						
GEO-2	GEO-1	Review the final location of the preferred alternative with affected mine operators and lessees to ensure all measures are taken to protect against subsidence.	•			•	•	•
GEO-4	GEO-2	A site-specific soil analysis shall be conducted prior to construction to verify any areas identified as unstable or marginally unstable on federal lands. A site-specific geotechnical analysis shall be conducted of federal lands prior to construction to locate areas where there is landslide risk. If such areas are identified, the Proponents will develop mitigation and submit a report to the appropriate land management agency.	•		•	•		
SOILS								
SW-1, 4, 5, 7–13	WQA-1–13	[See description under Water Quality]						
SPC-1-5	WQA-13–17	[See description under Water Quality]						
SOIL-1	SOIL-1	The Wyoming BLM State Reclamation Policy and applicable Agency management plan requirements for soil management will be followed on federal lands in the state of Wyoming.		•	•	•	•	•
SOIL-2	SOIL-2	The Proponents will submit a Compaction Monitoring Plan for review and Agency approval prior to construction that specifies the conditions under which construction will either not start or will be shut down due to excessively wet soils. Conditions will be measurable in the field and easy to demonstrate to construction workers.	•			•	•	•
SOIL-3	SOIL-3	During decommissioning, some obviously compacted areas, such as established newly constructed access roads, will require loosening prior to revegetation. If necessary to re-establish vegetation, the Proponents will use a ripper blade, till, or similar instrument to			•	•	•	•

Table Z-1. Companies' Proposed Environmental Protection Measures

GATEWAY WEST TRANSMISSION LINE PROJECT

1	2	3	4-6			7-9		
			Application Phase			Applicable to Land Ownership[1/]		
DEIS Number	**New EPM Number for FEIS Submittal**	**Environmental Protection Measures**	**Design and Engineering**	**Construction**	**Operations and Maintenance**	**Federal Land and all land in Wyoming and Idaho Segments 6, 8 and 9**	**State Land in Idaho**	**Private Land in Idaho Segments 4, 5, 7, and 10**
		loosen the surface soil layer.						
SOIL-6	SOIL-4	Detrimental soil disturbance such as compaction, erosion, puddling, and displacement will be minimized through implementing measures identified in the SWPPP. Measures may include road ripping, frequent waterbars, cross-ditching (e.g., rolling dips) or other methods to reduce compaction while preventing gully formation. Ripping pattern should be altered to a crossing, diagonal, or undulating pattern of tine paths to avoid concentrated runoff patterns that can lead to gullies.	•	•	•	•	•	•
SOIL-7	SOIL-5	The Proponents are responsible for monitoring to ensure soil protection is achieved, and providing a monitoring report on reseeding success and/or other methods to stabilize soils to the Forest Service by the end of each growing season for areas on NFS lands for 3 years or until requirements are met for the applicable permit.		•	•	•		
SOIL-8	SOIL-6	Reclamation of all temporary disturbances on NFS lands (such as road cuts) should include replacement of material to original contours and re-compaction to pre-disturbance compaction percentage (which should be identified during reclamation at adjacent locations to the disturbance). Guidelines for streambank re-compaction to maximize vegetative regrowth and mechanical stability are covered in USACE publication ERDC TN-EMRRP-SR-26 (Goldsmith et al. 2001).		•	•	•		
SOIL-10	SOIL-7	In order to meet Forest Plan Soil Standards on NFS lands, the Reclamation and Revegetation Plan will describe on-site restoration using topsoil salvaging.	•	•	•	•		
WATER QUALITY								
SW-1	WQA-1	The appropriate NPDES permits for construction activities that disturb one acre or more of land will be obtained from the Department of Environmental Quality and USEPA or their designees.		•	•	•	•	•
SW-2	WQA-2	NPDES permit requirements will be met. This includes implementing and maintaining appropriate BMPs for minimizing impacts to surface water.		•	•	•	•	•
SW-3	WQA-3	One or more responsible persons will be designated to manage stormwater issues, conduct the required stormwater inspections, and maintain the appropriate records to document compliance with the terms of the NPDES permit.		•	•	•	•	•
SW-4	WQA-4	The SWPPPs will be modified as necessary to account for changing construction conditions.		•	•	•	•	•
SW-5	WQA-5	The SWPPPs will identify areas with critical erosion conditions that may require special		•	•	•	•	•

Table Z-1. Companies' Proposed Environmental Protection Measures

GATEWAY WEST TRANSMISSION LINE PROJECT

1	2	3	4-6			7-9		
			Application Phase			Applicable to Land Ownership[1/]		
DEIS Number	New EPM Number for FEIS Submittal	Environmental Protection Measures	Design and Engineering	Construction	Operations and Maintenance	Federal Land and all land in Wyoming and Idaho Segments 6, 8 and 9	State Land in Idaho	Private Land in Idaho Segments 4, 5, 7, and 10
		construction activities or additional BMPs to minimize soil erosion.						
SW-7	WQA-6	Stormwater BMPs will be maintained on all disturbed lands during construction activities, as described in the SWPPP.		•	•	•	•	•
SW-8	WQA-7	Approved sediment and erosion control BMPs will be installed and maintained until disturbed areas meet final stabilization criteria.		•	•	•	•	•
SW-9	WQA-8	Temporary BMPs will be used to control erosion and sediment at staging areas (equipment storage yards, fly yards, lay down areas) and substations.		•	•	•	•	•
SW-10	WQA-9	The construction schedule may be modified to minimize construction activities in rain-soaked or muddy conditions.		•	•	•	•	•
SW-11	WQA-10	Damaged temporary erosion and sediment control structures will be repaired in accordance with the SWPPP.		•	•	•	•	•
SW-12	WQA-11	Upon completion of construction, permanent erosion and sediment BMPs will be installed along the transmission line within the ROW, at substations, and at related facilities in accordance with the SWPPPs.		•	•	•	•	•
SW-13	WQA-12	In areas of droughty soils, the soil surfaces will be mulched and stabilized to minimize wind erosion and to conserve soil moisture in accordance with the SWPPPs.		•		•	•	•
SPC-1	WQA-13	Construction industry standard practices and BMPs will be used for spill prevention and containment.		•		•	•	•
SPC-2	WQA-14	Construction spills will be promptly cleaned up and contaminated materials hauled to a disposal site that meets local jurisdictional requirements.		•		•	•	•
SPC-3	WQA-15	All staging areas will contain fueling areas with containment. Where fueling must be conducted along the ROW, the plan will specify BMPs.		•		•	•	•
SPC-4	WQA-16	If an upland spill occurs during construction, berms will be constructed with available equipment to physically contain the spill. Absorbent materials will be applied to the spill area. Contaminated materials will be excavated and temporarily placed on and covered by plastic sheeting in a containment area a minimum of 100 feet away from any wetland or waterbody, until proper disposal is arranged.		•		•	•	•
SPC-5	WQA-17	If a spill occurs which is beyond the capability of on-site equipment and personnel, an Emergency Response Contractor will be identified and available to further contain and clean up the spill.		•		•	•	•

Table Z-1. Companies' Proposed Environmental Protection Measures

GATEWAY WEST TRANSMISSION LINE PROJECT

1	2	3	4-6			7-9		
			Application Phase			Applicable to Land Ownership[1/]		
DEIS Number	**New EPM Number for FEIS Submittal**	**Environmental Protection Measures**	**Design and Engineering**	**Construction**	**Operations and Maintenance**	**Federal Land and all land in Wyoming and Idaho Segments 6, 8 and 9**	**State Land in Idaho**	**Private Land in Idaho Segments 4, 5, 7, and 10**
SPC-6	WQA-18	For spills in standing water, floating booms, skimmer pumps, and holding tanks will be used as appropriate by the contractor to recover and contain released materials on the surface of the water.		•		•	•	•
SPC-7	WQA-19	If pre-existing contamination is encountered during operations, work will be suspended in the area of the suspected contamination until the type and extent of the contamination is determined. The type and extent of contamination; the responsible party; and local, state, and federal regulations will determine the appropriate cleanup method(s) for these areas.		•		•	•	•
SPC-8	WQA-20	The SPCC Plan will include details on the types and quantities of absorbent and protective materials (e.g., visqueen, booms) that must be readily available to construction personnel and requirements for the restocking of materials.		•		•	•	•
SPC-9	WQA-21	Materials such as fuels, other petroleum products, chemicals, and hazardous materials including wastes will be located in upland areas at least 500 feet away from streams, 400 feet for public wells, and 200 feet from private wells.		•		•	•	•
SPC-10	WQA-22	Pumps and temporary fuel tanks for the pumps will be stored in secondary containment. Containment will provide a minimum volume equal to 110 percent of the volume of the largest storage vessel located in the yard.		•		•	•	•
WQA-1	WQA-23	Avoid placement of road bed material in channels (perennial, intermittent or ephemeral). Road bed material contains considerable fines that would create sedimentation in coarse cobble dominated stream channels. Even in seasonally dry reaches those fines could be transported during flow periods and negatively impact fish spawning reaches below.	•	•	•	•	•	•
WQA-2	WQA-24	On federal lands, consult with appropriate land management agency staff prior to siting and design for stream crossings (location, alignment, and approach for culvert, drive-through, and ford crossings). This may include a hydrologist, engineer and, for perennial and many intermittent streams, an aquatic biologist.	•			•		
WQA-3	WQA-25	All culverts on NFS lands, both permanent and temporary, shall be designed and installed to meet desired conditions for riparian and aquatic species as identified in the applicable Forest Plan. Culverts should not be hydraulically controlled. Hydraulically controlled culverts create passage problems for aquatic organisms. Culvert slope should not exceed stream gradient and should be designed and implemented (typically by partial burial in the streambed) to maintain streambed material in the culvert.	•	•	•	•		
WQA-4	WQA-26	Culvert sizing on NFS lands should also comply with Guidance for Aquatic Species	•	•	•	•		

Table Z-1. Companies' Proposed Environmental Protection Measures

GATEWAY WEST TRANSMISSION LINE PROJECT

1	2	3	4-6			7-9		
			Application Phase			Applicable to Land Ownership[1/]		
DEIS Number	New EPM Number for FEIS Submittal	Environmental Protection Measures	Design and Engineering	Construction	Operations and Maintenance	Federal Land and all land in Wyoming and Idaho Segments 6, 8 and 9	State Land in Idaho	Private Land in Idaho Segments 4, 5, 7, and 10
		Passage Design, Forest Service Northern Region & Intermountain Region (Forest Service 2003f).						
WQA-5	WQA-27	On non-federal lands, culvert placement should comply with state BMPs.		•	•		•	•
SW-6	WQA-28	Migration of construction-related sediment to all adjacent surface waterbodies will be prevented.				•	•	•
TR-3	WQA-29	If the Project proposes to obtain water from wells or surface water sources to suppress dust, written approval from the landowner or regulatory agency will be obtained prior to appropriation.		•				•
LAND USE								
TR-7	TR-5	(See description under Transportation)						
LU-1	LU-1	Signs shall be posted at access points to access roads where public access is restricted by a land use plan, and on private, state, and Tribal lands at the request of the landowner, agency, or Tribal government. Signs shall indicate the restriction or regulation, location, penalty for violation, and appropriate contact information for reporting violations. Signage shall be maintained and replaced as part of the routine maintenance.			•	•	•	•
AGRICULTURE								
AGRI-18	AGRI-1	Consult with the Farm Service Agency and landowners to determine how construction may affect the CRP status of the land currently enrolled in CRP.	•					•
TRANSPORTATION								
TR-1	TRANS-1	A Traffic and Transportation Management Plan will be developed and implemented to provide site-specific details showing how the Project will comply with the EPMs listed in this attachment. This plan will be submitted to and approved by the appropriate federal, state, and local agencies with authority to regulate use of public roads, and approved, prior to the issuance of a Notice to Proceed with construction.	•			•	•	•
TR-4	TRANS-2	If a construction method requires the closure of a state- or county-maintained road for more than 1 hour, a plan will be developed to accommodate traffic as required by a county or state permit.	•	•			•	•
TR-5	TRANS-3	On county- and state-maintained roads, caution signs will be posted on roads, where appropriate, to alert motorists of construction and warn them of slow traffic. Traffic control measures such as traffic control personnel, warning signs, lights, and barriers will be used during construction to ensure safety and to minimize traffic congestion.	•	•			•	•

Table Z-1. Companies' Proposed Environmental Protection Measures

GATEWAY WEST TRANSMISSION LINE PROJECT

1	2	3	4-6			7-9		
			Application Phase			Applicable to Land Ownership[1/]		
DEIS Number	**New EPM Number for FEIS Submittal**	**Environmental Protection Measures**	**Design and Engineering**	**Construction**	**Operations and Maintenance**	**Federal Land and all land in Wyoming and Idaho Segments 6, 8 and 9**	**State Land in Idaho**	**Private Land in Idaho Segments 4, 5, 7, and 10**
TR-6	TRANS-4	To reduce traffic congestion and roadside parking hazards, an equipment yard will be provided for primary parking for employee personal vehicles.	•	•		•	•	•
TR-7	TRANS-5	Unauthorized vehicles will not be allowed within the construction ROW or along roadsides near the ROW.		•		•	•	•
TR-8	TRANS-6	Construction vehicles will follow a 25 mph speed limit on unposted project roads.		•		•	•	•
TR-10	TRANS-7	Landowners will be notified at least 48 hours prior to the start of construction within 0.25 mile of a residence.		•		•	•	•
TR-11	TRANS-8	Emergency vehicle access to private property will be maintained.		•				•
TR-12	TRANS-9	Roads in residential areas will be restored as soon as possible, and construction areas near residences will be fenced off at the end of the construction day.		•				•
TR-13	TRANS-10	Roads negatively affected by construction and as identified by the agencies will be returned to pre-construction condition.		•		•	•	•
TR-14	TRANS-11	Roads developed specifically for this project that are identified by the Proponents as no longer necessary will be reclaimed as specified in the Final Reclamation, Plan. Culverts will be removed.		•		•	•	•
TRANS-1	TRANS-12	The Proponents will attempt to identify existing two-track trails as preferred access roads for construction.	•	•		•	•	•
TRANS-2	TRANS-13	Roads will be designed so proper drainage is not impaired and roads will be built to minimize soil erosion. Consult with appropriate Agencies during design stage.	•	•	•	•	•	•
TRANS-3	TRANS-14	Access roads built for the Project on federal lands shall be closed to the public unless otherwise agreed upon with the land management agency. Signs shall indicate the restriction or regulation, location, penalty for violation, and appropriate contact information for reporting violations. Signage and road closure measures shall be evaluated during routine visits and maintained or replaced as necessary as part of routine maintenance. Access roads constructed solely for use by the Proponents will be maintained by the Proponents as needed for Proponents use in accordance with the ROW grant/special use permits.	•	•	•	•		
TRANS-4	TRANS-15	Roads to be abandoned may be left intact through mutual agreement of the land management agency, landowner, the tenant, and the Proponents, unless located in flood areas or drainage hazard areas or otherwise restricted by federal, state, or local regulations.	•	•	•	•	•	•

Table Z-1. Companies' Proposed Environmental Protection Measures

GATEWAY WEST TRANSMISSION LINE PROJECT

1	2	3	4-6			7-9		
			Application Phase			Applicable to Land Ownership[1/]		
DEIS Number	New EPM Number for FEIS Submittal	Environmental Protection Measures	Design and Engineering	Construction	Operations and Maintenance	Federal Land and all land in Wyoming and Idaho Segments 6, 8 and 9	State Land in Idaho	Private Land in Idaho Segments 4, 5, 7, and 10
AIR QUALITY								
AIR-1	AIR-1	Minimize idling time for diesel equipment whenever possible.		•		•	•	•
AIR-2	AIR-2	Ensure that diesel-powered construction equipment is properly tuned and maintained, and shut off when not in direct use.		•		•	•	•
AIR-3	AIR-3	Prohibit engine tampering to increase horsepower.		•		•	•	•
AIR-4	AIR-4	Reduce construction-related trips as feasible for workers and equipment, including trucks.		•		•	•	•
TR-2	AIR-5	Dust suppression techniques will be applied, such as watering construction areas or removing dirt tracked onto a paved road as necessary to prevent safety hazards or nuisances on access roads and in construction zones near residential and commercial areas and along major highways and interstates.		•		•	•	•
ELECTRICAL ENVIRONMENT								
–	EE-1	During final design, limit the conductor surface gradient in order to meet the IEEE Radio Noise Guideline.		•	•		•	•
–	EE-2	During construction, identify objects such as fences, metal buildings, pipelines, and other metal objects within or near the proposed ROW that have the possibility for induced potentials and currents and implement electrical grounding of these objects according to the utility's and National Electric Code standards.			•	•	•	•
–	EE-3	During final design and construction, identify areas where large equipment is anticipated and provide sufficient conductor clearance to ground to meet the NESC 5 mA rule or limit size or access of large equipment.		•	•		•	•
PUBLIC SAFETY (Blasting, Fire, Contamination)								
BLA-1	BLA-1	The Blasting Plan will identify blasting procedures including safety, use, storage, and transportation of explosives that will be employed where blasting is needed, and will specify the locations of needed blasting.		•		•	•	•
BLA-2	BLA-2	All blasting will be performed by registered licensed blasters who will be required to secure all necessary permits and comply with regulatory requirements in connection with the transportation, storage, and use of explosives, and blast vibration limits for nearby structures, utilities, wildlife, and fish (where blasting is conducted in waterbodies).		•		•	•	•
–	BLA-3	Appropriate flags, barricades, and warning signals will be used to ensure safety during blasting operations. Blast mats will be used when needed to prevent damage and injury		•		•	•	•

Table Z-1. Companies' Proposed Environmental Protection Measures

GATEWAY WEST TRANSMISSION LINE PROJECT

1	2	3	4-6			7-9		
			Application Phase			Applicable to Land Ownership[1/]		
DEIS Number	**New EPM Number for FEIS Submittal**	**Environmental Protection Measures**	**Design and Engineering**	**Construction**	**Operations and Maintenance**	**Federal Land and all land in Wyoming and Idaho Segments 6, 8 and 9**	**State Land in Idaho**	**Private Land in Idaho Segments 4, 5, 7, and 10**
		from fly rock.						
–	BLA-4	Blasting in the vicinity of pipelines will be coordinated with the pipeline operator, and will follow operator-specific procedures, as necessary.		•		•	•	•
–	BLA-5	Damages that result from blasting will be repaired or the owner fairly compensated.		•		•	•	•
FIRE-1	FIRE-1	Train all personnel about the measures to take in the event of a fire including fire dangers, locations of extinguishers and equipment, and individual responsibilities for fire prevention and suppression.		•	•	•	•	•
FIRE-2	FIRE-2	Equip all construction equipment operating with internal combustion engines with spark arresters.		•	•	•	•	•
FIRE-3	FIRE-3	Restrict motorized equipment, including worker transportation vehicles, to the designated and approved work limits.		•	•	•	•	•
FIRE-5	FIRE-4	Require all motor vehicles and equipment to carry, and individuals using handheld power equipment to have, specified fire prevention equipment.		•	•	•	•	•
FIRE-6	FIRE-5	Provide a list of equipment capable of being adapted to fighting fires to local fire protection agencies.		•	•	•	•	•
FIRE-7	FIRE-6	Notify the appropriate fire suppression agencies of scheduled road closures.		•	•	•	•	•
FIRE-8	FIRE-7	Prohibit burning of slash, brush, stumps, trash, explosives storage boxes, or other Project-generated debris unless authorized by the applicable land management agency.		•	•	•	•	•
FIRE-9	FIRE-8	Designate a Fire Guard on each construction crew prior to the start of construction activities each day and provide a communications system for maintaining contact with fire control agencies.		•	•	•	•	•
FIRE-10	FIRE-9	The Proponents shall comply with fire restrictions and/or waivers as applicable.		•	•	•	•	•
ENV-2	CON-1	All construction staff will be trained on the types of contamination that could be encountered and how to respond if contamination is encountered.		•		•		
NOISE								
NOISE-2	NOISE-1	Identify and provide a public liaison person before and during construction to respond to concerns of neighboring receptors, including residents, about noise construction disturbance.		•	•	•	•	•
NOISE-3	NOISE-2	Establish a toll-free telephone number for receiving questions or complaints during construction and develop procedures for responding to callers.		•		•	•	•
NOISE-4	NOISE-3	Implement and maintain a noise complaint review process to deal with residents' or other		•		•	•	•

Table Z-1. Companies' Proposed Environmental Protection Measures

GATEWAY WEST TRANSMISSION LINE PROJECT

1	2	3	4-6			7-9		
			Application Phase			Applicable to Land Ownership[1/]		
DEIS Number	**New EPM Number for FEIS Submittal**	**Environmental Protection Measures**	**Design and Engineering**	**Construction**	**Operations and Maintenance**	**Federal Land and all land in Wyoming and Idaho Segments 6, 8 and 9**	**State Land in Idaho**	**Private Land in Idaho Segments 4, 5, 7, and 10**
		potential queries and complaints as they arise. Such complaints would be logged and investigated on an individual basis to facilitate resolution of the issue of concern.						

1/ In Wyoming and Idaho Segments 6, 8, and 9, the EPMs will be applied to the entire segment (i.e., including the private and state land) except as follows:

- Proposed substation and regeneration sites located on private land unless they are standard EPMs of the Companies;
- EPMs that are only applicable to a specific BLM Field Office;
- EPMs that are only applicable to National Forest System lands; and
- Different practices will be followed on private property that are at the request of the property owner and don't violate the law.

In Idaho, Segments 4, 5, 7, and 10 are predominantly private ownership in agriculture and other development, and for the most part, the Federal land in these segments is clustered. In these segments, EPMs will be applied based on ownership except as follows:

- Proposed transmission line substation and regeneration sites located on private land unless they are standard EPMs of the Companies; and
- Different practices will be followed on private property that are at the request of the property owner and don't violate the law.