REVISION	
A	XX/XX/2013
PRELIMINARY REVIEW	
W.O. 27324626	
	IPC/HDR

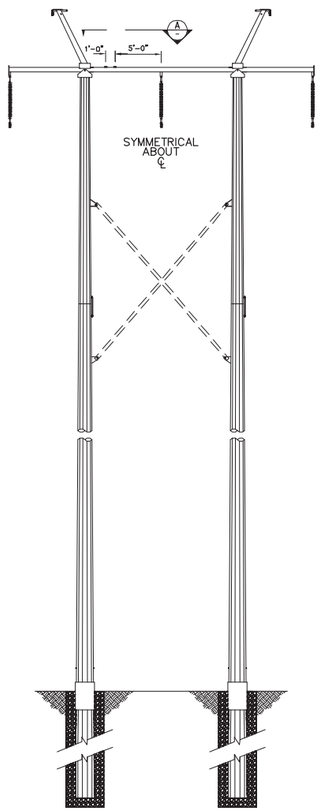

H–FRAME
LOOKING AHEAD STATION

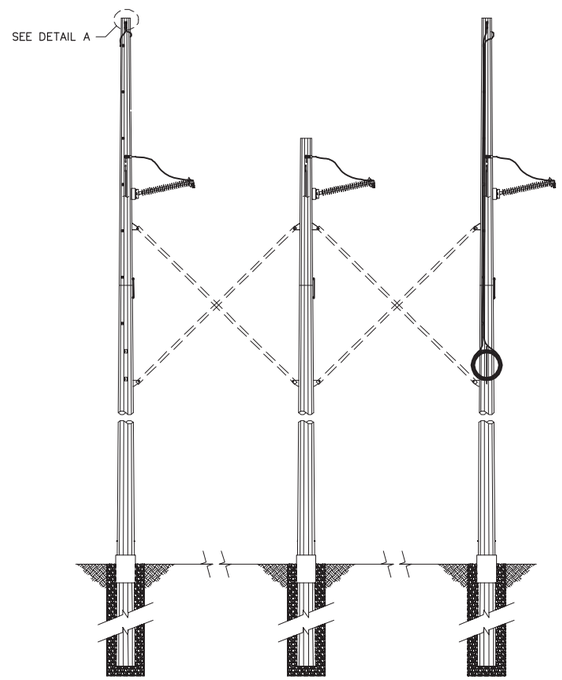

3–POLE
LOOKING AHEAD STATION

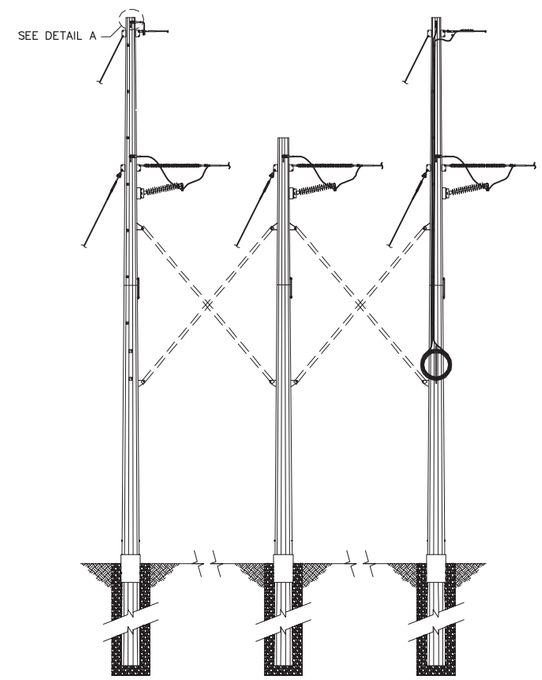

3–POLE
LOOKING AHEAD STATION

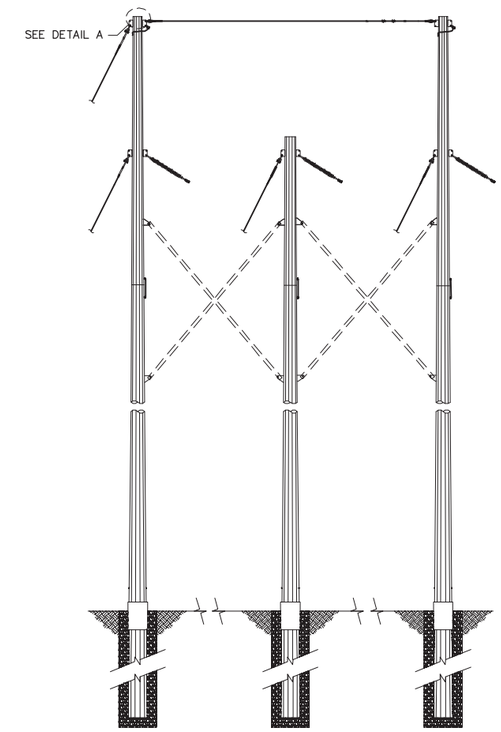

3–POLE
LOOKING AHEAD STATION

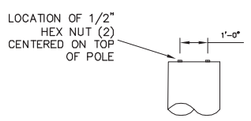

DETAIL A
SCALE: N.T.S.

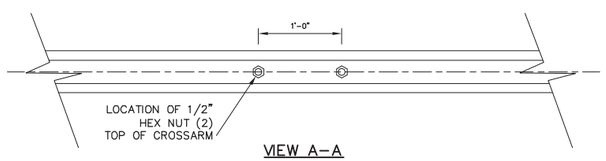

VIEW A–A
SCALE: N.T.S.

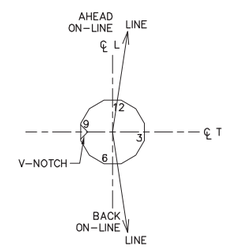

POLE ORIENTATION

NOTES:

FOR STRUCTURE DIMENSIONS SEE LOAD AND DESIGN DRAWINGS.

FOR STRUCTURES 10, 20, 30, 40, 50, 60, 70, 80, 90, 100, 110 ,120, 130, 140, 150, 160, 170, 180, 190, 200, 210, 220, 230, 240, 250, 260, 270, 280, 290, 300, 310, 320, 330, 340, 350, 360, 370, 380, 390, 400, 410, 420, 430, 440, 450, 460, 470, 480

REFERENCE DRAWINGS	
23D–64819	PLAN & PROFILE

KING–WOOD RIVER
138KV
AERIAL PATROL

IDAHO POWER COMPANY BOISE, IDAHO

SCALE: 3/16"=1'–0" DATE: XX/XX/2013

REV.			
A	DS. HDR	APPROVED	21D–65215–1A
	DR. HDR	–	SHT. 1 1
	CH. –––		

VAULT NO. 21D–65215–1A