ENVIRONMENTAL ASSESSMENT

Haycock Family Partnership Corner Crossings

EA Number: DOI-BLM-AZ-C010-2013-004-EA **Lease/Serial Case File No.**AZA-034861

Bureau of Land Management (BLM) Office: Kingman Field Office

Proposed Action Title/Type: Right-of-Way (ROW) for two corner crossings

Location of Proposed Action:

G&SRM

T. 25 N., R. 17 W.,
sec. 2, lot 4, SW¼SW¼SW¼SW¼;
T. 26 N., R. 17 W.,
sec. 34, SE¼SE¼SE¼SE¼.

BACKROUND

The area of the proposed action is located approximately 25 miles North of Kingman just to the East of Stockton Hill Road within two townships that are referred to as checkerboard. The land status of each section alternates from private and lands managed by the Bureau of Land Management (BLM) also referred to as public lands. The result is a Township that looks like a checkerboard. (See Exhibit A) The Haycock Family partnership would like to acquire legal access to their private sections. In order to gain legal access to the sections in the proposed action a right-of-way at the corners of adjacent BLM land would need to be granted. The crossing that have been applied for would be located within T. 26 N., R. 17 W., sec. 34, SE¼SE¼SE¼SE¼, and T. 25 N., R. 17 W., sec. 2, lot 4. The second crossing would be located within T. 25 N., R. 17 W., sec. 2 SW¼SW¼SW¼SW¼ and T. 25 N., R. 17 W., sec. 10 NE¼NE¼NE¼NE¼. The configuration of the area applied for is as a "butterfly" crossing (refer to exhibit B). A field inspection showed a range fence running along the North and East section lines of section 10 making a "butterfly" crossing impractical. Instead the right-of-way for the second corner crossing would only be considered in section 2.

CONFORMANCE WITH APPLICABLE LAND USE PLAN:

This proposed action is in conformance with the Kingman Resource Management Plan approved March 1995. Remarks: RMP Decision number and narrative are listed:

LR13 All other minor rights-of-way would be evaluated through the environmental review process and granted or rejected on a case by case basis. Existing rights-of-way would be used when possible to minimize surface disturbance."

WL-55 Protect the important, crucial use, conflict or habitat areas for the threatened,

endangered, state-listed or sensitive species (Kingman Resource Management Plan, page 584).

TE03 BLM will manage for conservation of candidate and BLM-sensitive species (*and* State Listed species). BLM will ensure that actions authorized will not contribute to the need to list any of these species as threatened or endangered (Kingman Resource Management Plan, page 29).

PURPOSE AND NEED FOR PROPOSED ACTION

The purpose and need for the proposed action is to process the application (SF299 "Application for Transportation and Utility Systems and Facilities on Federal Lands") received October 30, 2008 and submitted by Haycock Family Partnership. The application is for two corner crossings to provide legal access to private property. The need for the action is established by the BLM's responsibility under the Federal Land Policy Management Act to respond to a request for a Right-of-Way Grant for facilities on public land.

DESCRIPTION OF PROPOSED ACTION ALTERNATIVE

The proposed action is to grant right-of-way under the authority of Title V of the Federal Land Management and Policy act for the construction, operation, maintenance, and termination of two access roads by way of corner crossings. Although both would provide legal access to adjacent private lands, the configurations of the two would be different. One of these access roads would be a standard "butterfly" configuration within the Southwest corner of section 34 and the Northwest corner of section 2. The second access road would be half of the butterfly configuration and located entirely within Southwest corner of section 2. The length of both crossings would be 200 feet and the widths would be 42 feet (see Exhibit B and C for the proposed configurations).

The original application requested a portion of the access road in section 10. There is a range fence along the North and East section lines of section 10 where the proposed corner crossing where the access road would be. Because of the fence, the right-of-way area in this section would not be considered although the portion of this access road in the Southwest corner of section 2 would still be considered to allow for legal access to the property.

The construction of the corner crossings would be done using heavy equipment (bull dozer, etc.) with the area of disturbance is estimated to be approximately 0.125 acres within each of the Southeast corner of section 34, Northwest corner of section 2, and the Southwest corner of section 2 totaling approximately 0.746 acres.

The term of this right-of-way would be for 30 years. The applicant intends to have the right-of-way assigned to the county. After consultation with the county, the assignment for the standard "butterfly" crossing would be considered for assignment but the crossing that would not be the standard configuration would not be ideal for assignment. In the event the BLM approves such an assignment, the term may be changed to perpetuity.

DESCRIPTION OF NO ACTION ALTERNATIVE

Under the No Action Alternative the application would be denied. No additional environmental effects would occur and no legal access to private property would be approved.

AFFECTED ENVIRONMENT/ENVIRONMENTAL IMPACTS:

The affected environment was considered and analyzed by an interdisciplinary team as documented in the KFO Project Scoping Form found in the Administrative Record for this proposal. Resources of concern that are either not present in the project area or would not be impacted to a degree that requires detailed analysis will not be discussed here. Resources which could be impacted by the proposed action or alternatives are discussed below.

This section describes the existing conditions of the environment and expected impacts. The table below summarizes the resources reviewed for this project. Resources not present within the project study area, as well as those present and not affected, are not discussed. Those resources that have been identified by an interdisciplinary team as present and potentially affected are discussed further below.

PROJECT RESOURCE REVIEW

PROJECT RESOURCE REVIEW			
Resources & Programs Considered	**Not Present**	**Present and Not Affected**	**Present and/or Potentially Affected**
Air Quality*		✓	
Cultural, Historic & Paleontological Resources*	✓		
Fish Habitat*	✓		
Forests and Rangelands*		✓	
Migratory Birds*			✓
Native American Religious Concerns*		✓	
Threatened or Endangered Species*	✓		
Hazardous or Solid Wastes*	✓		
Drinking or Groundwater Quality*	✓		
Wild & Scenic Rivers*	✓		
Wilderness*	✓		
Environmental Justice*/ Socioeconomics	✓		
Floodplains*		✓	
Wetlands-Riparian Zones*	✓		
Areas of Critical Environmental Concern	✓		
Prime or Unique Farmlands	✓		
Fuels/Fire Management	✓		
Lands & Realty		✓	
Law Enforcement	✓		
Minerals	✓		
Human Health & Public Safety	✓		
Recreation		✓	

Grazing		✓	
Soils		✓	
Travel Management		✓	
Vegetation		✓	
Visual Resources		✓	
Weeds(Invasive & Non-Native)		✓	
Wild Horses/Burros		✓	
Wildlife			✓

*Consideration Required By Law or Executive Order

EXPECTED IMPACTS FROM THE PROPOSED ACTION

Threatened and Endangered Species- There is no habitat for any listed species with the exception that the project area is located within the designated non-essential experimental population area of the California condor. The nonessential experimental population status applies to condors only when they are within the experimental population area. Outside of this area condors are considered endangered. Condors have not been documented in the project area and no nest, roost or perching habitat in the project area. Therefore there would be "no effect" to the California condor from the implementation of the Proposed Action.

WILDLIFE and MIGRATORY BIRDS -

The impacts from the proposed action would be the reduction of wildlife habitat and migratory bird habitat by approximately 0.746 acres that would result from the removal of vegetation through the construction of the roadway. It is anticipated that through maintenance activities and increased vehicular traffic this would remain un-vegetated and unsuitable for use by most wildlife. If the road is constructed between March 1 and September 5 nesting songbirds, upland game birds, and raptors would potentially be disturbed. Nests or nestlings could be destroyed. The raptors most likely to nest in this location are the Swainson's hawk and ferruginous hawk. In Hualapai Valley these birds nest in catclaw, mesquite, or Joshua trees, or large cacti.

During the construction and use of this road, wildlife would be displaced to adjacent habitat areas. The wildlife that may be affected are those animals that are present or rely on the vegetation within the right-of-way area. Some of these species include the Merriam's kangaroo rat, southern grasshopper mouse, horned lizard, horned lark, and black-throated sparrow.

VRM - This proposed right-of-way is within VRM Category IV, which provides for management activities that require major modifications of the existing character of the landscape.

EXPECTED IMPACTS FROM THE NO ACTION ALTERNATIVE

The impact from the No Action alternative would be the right-of-way would not be granted and any additional environmental impacts to this area would not result from this alternative.

DESCRIPTION OF MITIGATION MEASURES AND RESIDUAL IMPACTS:

The residual impacts are anticipated to be the elimination of wildlife habitat totaling an area of approximately 0.375 acres in the aforementioned sections. These impacts would be anticipated for 30 years and may be in perpetuity if these were assigned to Mohave County.

Mitigation Measures

1. Construction of the roadway would occur between the dates of September 6 and February 28 to avoid impacts to nesting birds.
2. If construction occurs between the dates of March 1 to September 5 the following would be required:

    a. For small birds (songbirds and game birds) a pre-construction nest survey by a qualified biologist would be required along the proposed route 150 feet (300 meters) to either side of the centerline. If an active nest is found on or within 1000 feet (300 meters) of the proposed ROW, construction would not be authorized until the young have safely fledged. All active nests would be reported to the authorized officer.

    b. For raptors a nest search would be conducted in a ½ mile radius around the proposed road route. If an active nest is found within this distance construction would not be authorized until the young have safely fledged. All active nests would be reported to the authorized officer.

For other mitigation measures refer to the Grant.

PERSONS/AGENCIES CONSULTED:

Tim Watkins-Archeologist BLM
Rebecca Peck- Wildlife Biologist BLM

Preparer(s):
Melissa Patriquin, Lands and Realty BLM

Environmental Coordinator:
Ramone McCoy, NEPA Coordinator BLM

Bureau of Land Management, Kingman Field Office
FINDING OF NO SIGNIFICANT IMPACT

NEPA Document Number: DOI-BLM-AZ-C010-2013-0010-EA

Finding of No Significant Impact: Based on the analysis of potential environmental impacts contained in the attached environmental assessment, I have determined that impacts are not expected to be significant and an environmental impact statement is not required.

Robert A. Sinclair

Field Manager, Kingman

March 19, 2013

Date

DECISION RECORD

NEPA Document Number: DOI-BLM-AZ-C010-2013-004-EA

Decision:

To grant right-of-way AZA-34861 as described in section 4.0, the Description of Proposed Action of the environmental analysis (EA) numbered DOI-BLM-AZ-2013-004-EA.

Rationale for Decision:

I have reviewed the proposed action and have found it to be in conformance with the LUP as described in the Conformance With Applicable Land Use Plan section in the aforementioned EA.

The granting of this right-of-way would benefit The Hacycock Family Partnership by providing legal access across public lands managed by the Bureau of Land Management to their private property.

Stipulations:

See attached right-of-way grant.

Field Manager, Kingman

April 1, 2013

Date

FORM 2800-14
(August 1985)

Issuing Office
Kingman Field Office

UNITED STATES
DEPARTMENT OF THE INTERIOR
BUREAU OF LAND MANAGEMENT
RIGHT-OF-WAY GRANT/TEMPORARY USE PERMIT

SERIAL NUMBER AZA34861

---

1. A right-of-way is hereby granted pursuant to Title V of the Federal Land Policy and Management Act of October 21, 1976 (90 Stat. 2776; 43 U.S.C. 1761).

2. Nature of Interest:

a. By this instrument, the holder:

Haycock Family Partnership
4509 Coronado Avenue
Bakersfield, CA 93306

receives a right to construct, operate, maintain, and terminate a fiber optic line on public lands (or Federal lands for MLA Rights-of-Way) described as follows:

Gila and Salt River Meridian, Arizona

T. 25 N., R. 17 W.,
sec. 2, lots 4, SW¼SW¼SW¼SW¼;
T. 26 N., R. 17 W.,
sec. 34, SE¼SE¼SE¼SE¼.

b. The right-of-way or permit area granted herein is 42 feet wide, 200 feet long, along section lines in the SE½ of sec. 34, T.26N., R.17W and the NW¼ of sec. 2, T.25N., R.17W. , herein designated as Segment 1, and 42 feet wide, 200 feet long along the sections lines in the SW¼ of sec. 2, T.25N., R.17W, herein designated as Segment 2, all in the G&SR Meridian. These areas aggregate .746 acres, more or less.

c. This instrument will terminate on December 31, 2042 unless, prior thereto, it is relinquished, abandoned, terminated, or modified pursuant to the terms and conditions of this instrument or of any applicable Federal law or regulation.

d. This instrument may be renewed. If renewed, the right-of-way or permit shall be subject to the regulations existing at the time of renewal and any other terms and conditions that the authorized officer deems necessary to protect the public interest.

e. Notwithstanding the expiration of this instrument or any renewal thereof, early relinquishment, abandonment, or termination, the provisions of this instrument, to the extent applicable, shall continue in effect and shall be binding on the holder, its successors, or assigns, until they have fully satisfied the obligations and/or liabilities accruing herein before or on account of the expiration, or prior termination, of the grant.

3. Rental:

For and in consideration of the rights granted, the holder agrees to pay the Bureau of Land Management fair market value rental as determined by the authorized officer unless specifically exempted from such payment by regulation. Provided, however, that the rental may be adjusted by the authorized officer, whenever necessary, to reflect changes in the fair market rental value as determined by the application of sound business management principles, and so far as practicable and feasible, in accordance with comparable commercial practices.

4. Terms and Conditions:

a. This grant or permit is issued subject to the holder's compliance with all applicable regulations contained in Title 43 Code of Federal Regulations parts 2800 and 2880.

b. Upon grant termination by the authorized officer, all improvements shall be removed from the public lands within 90 days, or otherwise dispose of as directed by the authorized officer.

c. Each grant issued for a term of 20 years or more shall, at a minimum, be reviewed by the authorized officer at the end of the 20th year and at regular intervals thereafter not to exceed 10 years. Provided, however, that a right-of-way or permit granted herein may be reviewed at any time deemed necessary by the authorized officer.

d. The stipulations, plans, maps, or designs set forth in Exhibits A, B, C, and D, dated January 3, 2013 attached hereto, are incorporated into and made a part of this grant instrument as fully and effectively as if they were set forth herein in their entirety.

e. Failure of the holder to comply with applicable law or any provision of this right-of-way grant or permit shall constitute grounds for suspension or termination thereof.

f. The holder shall perform all operations in a good and workmanlike manner so as to ensure protection of the environment and the health and safety of the public.

IN WITNESS WHEREOF, The undersigned agrees to the terms and conditions of this right-of-way grant or

permit.

(Signature of Holder)

(Print Name)

(Title)

(Date)

(Signature of Authorized Officer)

Field Mgr

(Title)

March 19, 2013

(Effective Date of Grant)

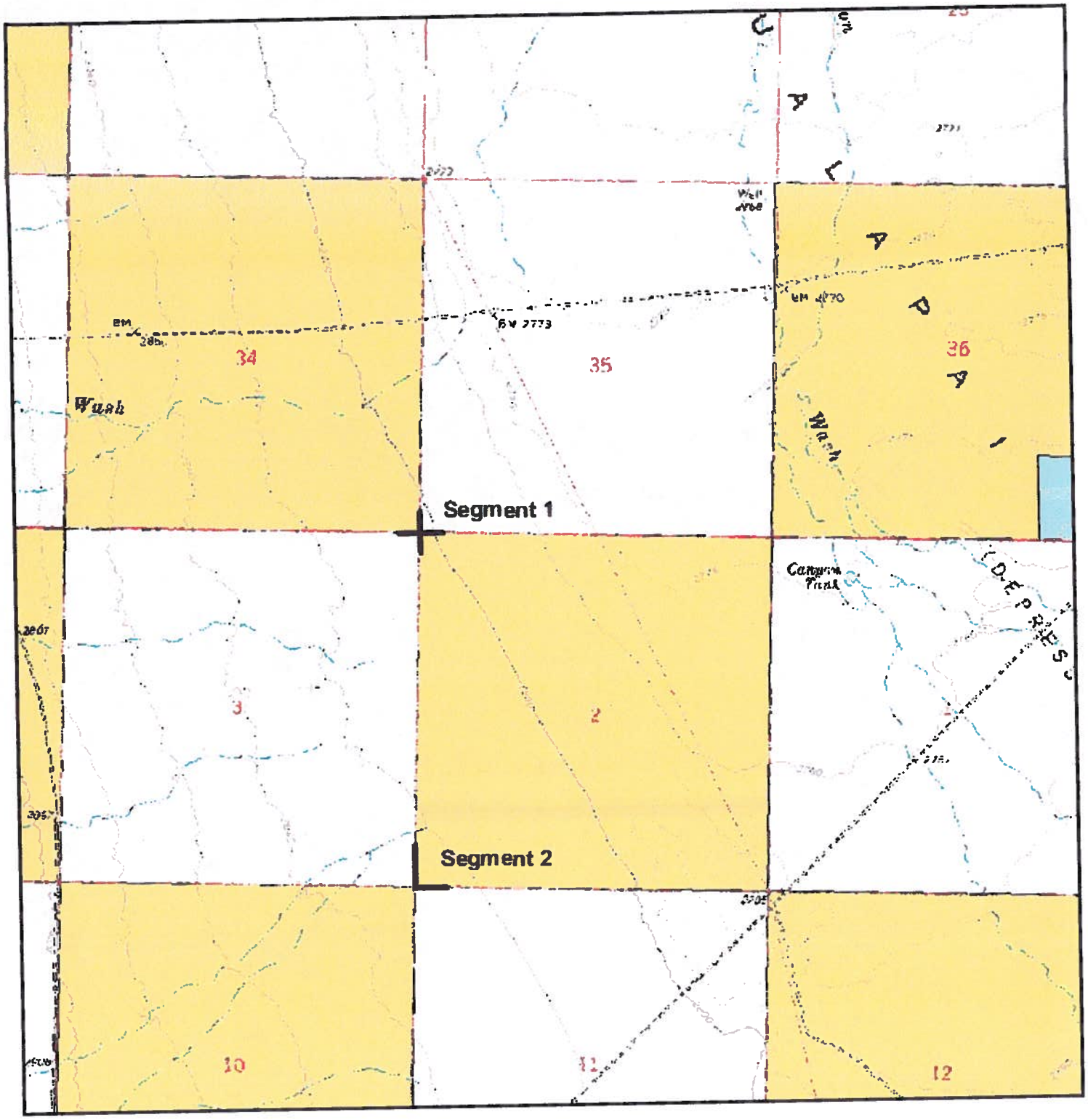

Exhibit A
Haycock ROW
AZA 34861
January 3 , 2013

NATIONAL SYSTEM OF PUBLIC LANDS

No warranty is made by the Bureau of Land Management for the use of the data for purposes not intended by the BLM.

0 0.25 0.5 Miles

STANDARD BUTTERFLY CORNER CROSSING
AZA 34861
Exhibit B
January 3, 2013

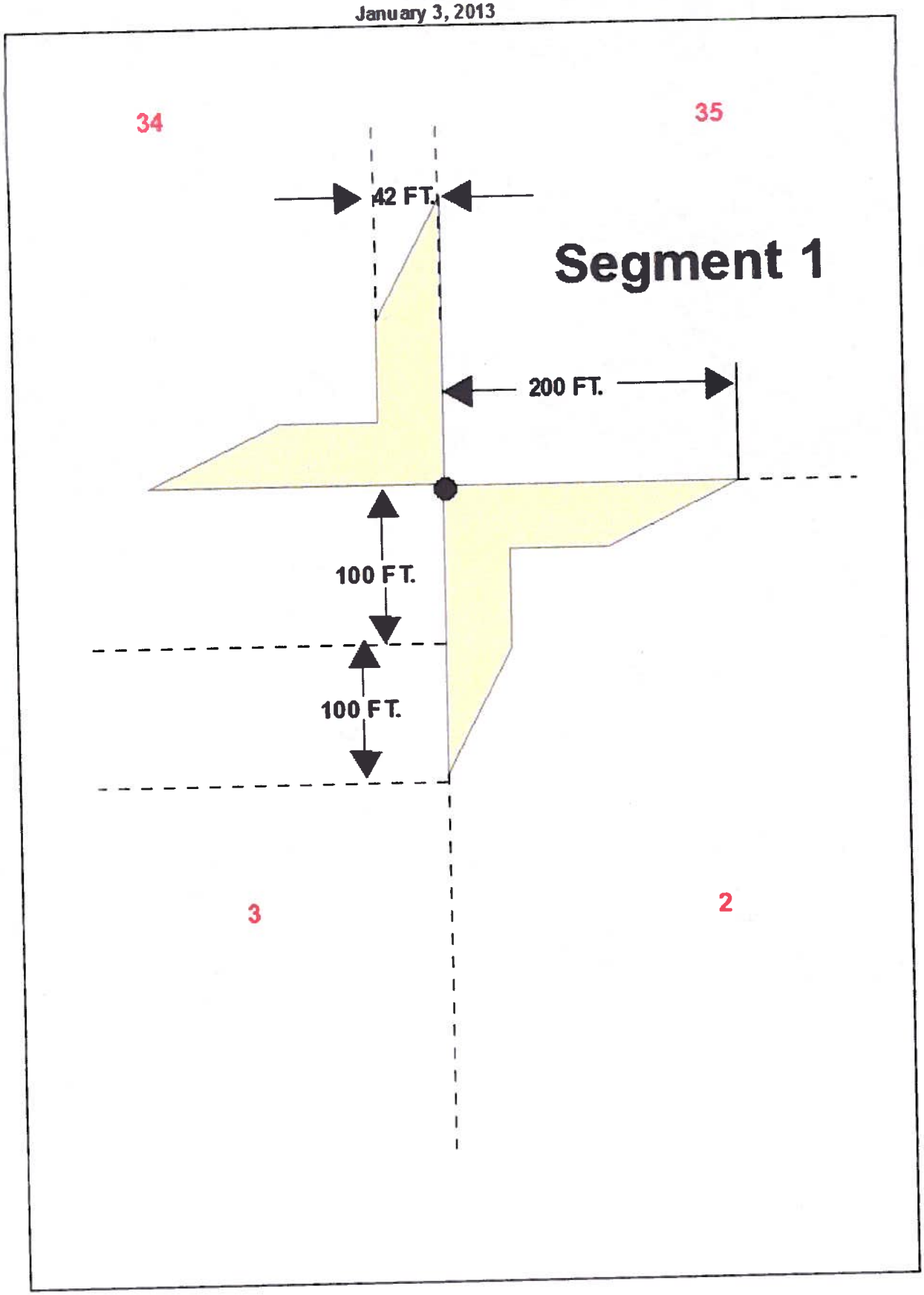

HALF-BUTTERFLY CORNER CROSSING
AZA 34861
Exhibit C
January 3, 2013

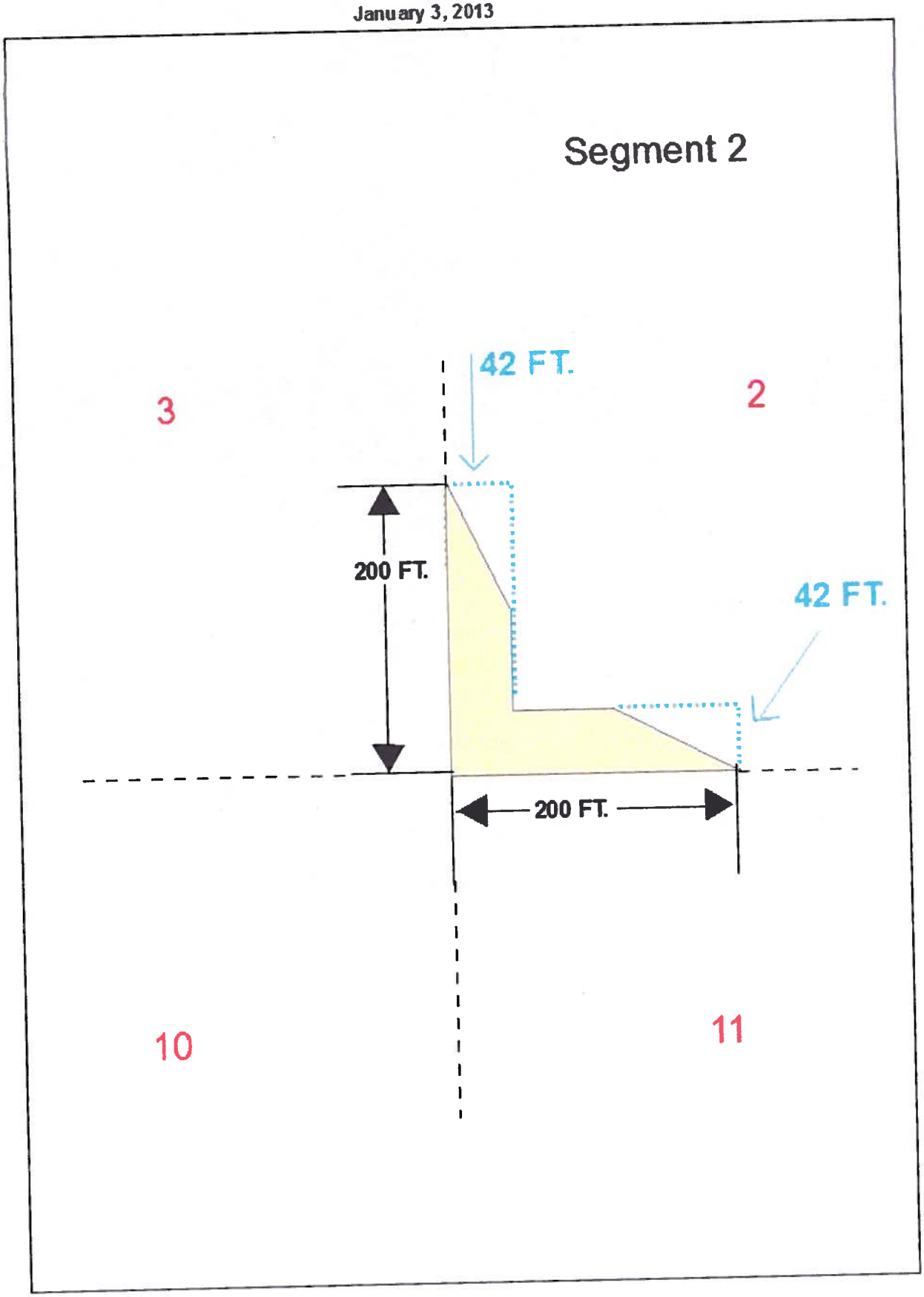

AZA-34861
Exhibit D
January 3, 2012
Terms and Conditions

1. The Holder shall conduct all activities associated with the construction, operation, and termination of the right-of-way within the authorized limits of the right-of-way.

2. Any cultural and/or paleontological resource (historic or prehistoric site or object) discovered by the Holder, or any person working on his behalf, on public or Federal land shall be immediately reported to the Authorized Officer. Holder shall suspend all operations in the immediate area of such discovery until written authorization to proceed is issued by the Authorized Officer. An evaluation of the discovery will be made by the Authorized Officer to determine appropriate actions to prevent the loss of significant cultural or scientific values. The Holder will be responsible for the cost of evaluation and any decision as to proper mitigation measures will be made by the Authorized Officer after consulting with the Holder.

3. The Holder(s) shall comply with all applicable Federal laws and regulations existing or hereafter enacted or promulgated. In any event, Holder(s) shall comply with the Toxic Substances Control Act of 1976, as amended (15 U.S.C. 2601, et seq.) with regard to any toxic substances that are used, generated by or stored on the right-of-way or on facilities authorized under this right-of-way grant (See 40 CFR, Part 702-799 and especially, provisions on polycholrinated biphenyls, 40 CFR 761.1-761.193.) Additionally, any release of toxic substances (leaks, spills, etc.) in excess of the reportable quantity established by 40 CFR, Part 117 shall be reported as required by the Comprehensive Environmental Response, Compensation and Liability Act of 1980, Section 102b. A copy of any report required or requested by any Federal agency or State government as a result of a reportable release of spill of any toxic substances shall be furnished to the Authorized Officer concurrent with the filing of the reports to the involved Federal agency or State government.

4. The holder shall limit excavation to the areas of construction. No borrow areas for fill material will be permitted on the site. All waste material resulting from construction or use of the site by the holder shall be removed from the site.

5. Construction sites shall be maintained in a sanitary condition at all times; waste material at those sites shall be disposed of promptly at an appropriate waste disposal site. "Waste" means all discarded matter including, but not limited to, human waste, trash, garbage, refuse, oil drums, petroleum products, ashes, and equipment.

6. The holder shall protect all survey monuments found within the right-of-way. Survey monuments include, but are not limited to, General Land Office and Bureau of Land Management Cadastral Survey Corners, reference corners, witness points, U.S. Coastal and Geodetic benchmarks and triangulation stations, military control monuments, and recognizable civil (both public and private) survey monuments. In the event of obliteration or disturbance of any of the above, the holder shall immediately report the incident, in writing, to the Authorized Officer and the respective installing authority, if known. Where General Land Office or Bureau of Land Management right-of-way monuments or references are obliterated during operations, the holder shall secure the services of a registered land surveyor to restore the disturbed monuments and references using procedures found in the manual of Surveying Instructions for the Survey of the Public Land in the United States, latest edition. The holder shall record such survey in the appropriate county and send a copy to the Authorized Officer. If the Bureau cadastral surveyors or other federal surveyors are used to restore the disturbed survey monument, the holder shall be responsible for the survey cost.

7. The holder shall permit free and unrestricted public access to and upon the right-of-way.

8. The corner crossing shall be constructed to provide drainage and minimize erosion. Culverts shall be installed if necessary to maintain drainage.

9. The holder is held liable for any negative affects this right-of-way causes to adjacent lands and consultation with the AO may be required for additional mitigation to resolve any conflict. This right-of-way may be terminated if such measures are ineffective.

10. When construction activity in connection with the right-of-way breaks or destroys a natural barrier used for livestock control, the gap, thus opened, shall be fenced to prevent the drift of livestock. The subject natural barrier shall be identified by the authorized officer and fenced by the holder as per instruction of the authorized officer.

11. Construction of the roadway would occur between the dates of September 6 and February 28 to avoid impacts to nesting birds.

12. If construction occurs between the dates of March 1 to September 5 the following would be required:

    a. For small birds (songbirds and game birds) a pre-construction nest survey by a qualified biologist would be required along the proposed route 150 feet (300 meters) to either side of the centerline. If an active nest is found on or within 1000 feet (300 meters) of the proposed ROW, construction would not be authorized until the young have safely fledged. All active nests would be reported to the authorized officer.

b. For raptors a nest search would be conducted in a ½ mile radius around the proposed road route. If an active nest is found within this distance construction would not be authorized until the young have safely fledged. All active nests would be reported to the authorized officer.

T. 26 N., R. 17 W.,
sec 34, SE¼SE¼SE¼SE¼
T. 25 N., R. 17 W.,
sec. 2 lot 4.

11/13/12

T. 25 N., R. 17 W.,
sec 2, SW1/4 SW1/4 SW1/4 SW1/4.

KINGMAN FIELD OFFICE SCOPING FORM

Proposal:
DOI-BLM-AZ-C010-2013-004-EA
NEPA Document Number

_____
RMP Implementation No.

S:\Blmshare\LANDS\Haycock
Document Location

Land Description: G&SRM
T. 25 N., R. 17 W.,
sec. 2, lot 4, SW¼SW¼SW¼SW¼,
T. 26 N., R. 17 W.,
sec. 34, SE¼SE¼SE¼SE¼.

Applicant: Haycock Family Partnership
Authorization: Right-of-Way

INVOLVEMENT: Indicate in the left column which disciplines need to provide information into the EA.

Needed Input (X)	Discipline		Signature	
	Lands			
	Minerals			
X	Range	Celeste Mimnaugh		
	Wild Horse and Burro			
	General Recreation			
X	Cultural and Paleontological Resources	Tim Watkins		
	Wilderness			
	Soils			
	Surface and Groundwater Quality/Water Rights			
	Air Quality			
X	Wildlife *	Rebecca Peck	Rebecca L. Peck	3/5/2013
X	Threatened and Endangered Plants and Animals *	Rebecca Peck	Rebecca L. Peck	3/5/2013
X	Migratory Birds *	Rebecca Peck	Rebecca L. Peck	3/5/2013
	Surface Protection			
	Hazardous Materials			
	Areas of Critical Environmental Concern			
X	Visual Resources	Amanda Deeds		3/13/13
	Socio-Economics/Environmental Justice			
	General Botany/Noxious Weeds			
	Energy Policy			

Writer: _____ Date: 1/25/13

Environmental Coordinator: _____ Date: 1/25/13

Field Manager: _____ Date: 3/18/2013

* all R. Peck's input is captured in the EA.