Appendix 4A
Bird and Bat Conservation Strategy

BIRD AND BAT CONSERVATION STRATEGY
PAN MINE PROJECT
WHITE PINE COUNTY, NEVADA

Prepared for:

Midway Gold US Inc.
8310 South Valley Highway, Suite 280
Englewood, Colorado 80112

Contact: Tom Williams
(720) 979-0900

Prepared by:

JBR Environmental Consultants, Inc.
595 Double Eagle Court, Suite 2000
Reno, Nevada 89521

JBR Project Number B.A12051.00

October 23, 2013

TABLE OF CONTENTS

1.0 INTRODUCTION 1
- 1.1 SCOPE 1
- 1.2 GOALS OF THE BIRD AND BAT CONSERVATION STRATEGY 2
- 1.3 IMPLEMENTATION OF THE BIRD AND BAT CONSERVATION STRATEGY 2
- 1.4 BENEFITS OF A BIRD AND BAT CONSERVATION STRATEGY 3
- 1.5 FEDERAL AND STATE AVIAN AND BAT PROTECTION LAWS, REGULATIONS, AND POLICY 3
  - 1.5.1 Migratory Bird Treaty Act 3
  - 1.5.2 Bald and Golden Eagle Protection Act 3
  - 1.5.3 Endangered Species Act 4
  - 1.5.4 BLM Policy 4
  - 1.5.5 Nevada Regulations 4
- 1.6 ENFORCEMENT OF THE MBTA, BGEPA, AND ESA 4

2.0 STUDY AREA 6
- 2.1 DESCRIPTION OF PROJECT AREA 6
- 2.2 DESCRIPTION OF PROPOSED PROJECT 8
- 2.3 AVIAN AND BAT PROTECTION MEASURES AND MODIFICATIONS UNDER THE PROPOSED ACTION 10
  - 2.3.1 Collision 10
    - 2.3.1.1 Ancillary Facilities 10
    - 2.3.1.2 Transmission Lines and Power Poles 10
  - 2.3.2 Electrocution 11
  - 2.3.3 Process Ponds 12
  - 2.3.4 Greater Sage-Grouse Protection Measures 13

3.0 SPECIES OF INTEREST 16
- 3.1 SENSITIVE SPECIES CRITERIA AND UTILIZATION OF PROJECT AREA 16
- 3.2 SENSITIVE SPECIES POTENTIALLY OCCURRING WITHIN THE PROJECT AREA 16

4.0 THREAT ASSESSMENT 23
- 4.1 PAN MINE PROJECT COMPONENTS 23
  - 4.1.1 Open Pits 23
  - 4.1.2 Process Ponds 23
  - 4.1.3 Transmission Lines and Power Poles 24
  - 4.1.4 Ancillary Facilities 24
- 4.2 CAUSES OF AVIAN AND BAT MORTALITY 25
  - 4.2.1 Collision 25
    - 4.2.1.1 Ancillary Facilities 25
    - 4.2.1.2 Transmission Lines and Power Poles 25
  - 4.2.2 Electrocution 26
    - 4.2.2.1 Transmission Lines 26
    - 4.2.2.2 Bird Nesting 27
  - 4.2.3 Process Ponds 27
- 4.3 EFFECTS TO AVIAN AND BAT SPECIES 27

4.3.1 Effects from Project Construction 27
4.3.1.1 Open Pits and Waste Rock Disposal Areas 27
4.3.1.2 Transmission Lines and Power Poles 28
4.3.1.3 Process Ponds.....29
4.3.1.4 Ancillary Facilities.....29
4.3.2 Effects from Project Operations.....29
4.3.2.1 Open Pits and Waste Rock Disposal Areas 29
4.3.2.2 Transmission Lines and Power Poles 29
4.3.2.3 Process Ponds.....30
4.3.2.4 Ancillary Facilities.....30

5.0 CORPORATE POLICY 31
5.1 TRAINING.....31
5.2 PERMIT COMPLIANCE.....31

6.0 IMPLEMENTATION AND ADAPTIVE MANAGEMENT ACTIONS 32
6.1 AVIAN AND BAT REPORTING SYSTEM.....32
6.1.1 Purpose of the Avian and Bat Reporting System.....32
6.1.2 Avian Reporting System Components.....32
6.1.2.1 Detection 32
6.1.2.2 Response and Documentation to Injured, Deceased, and Nesting Birds 32
6.1.2.3 Remedial Action 33
6.1.3 Reporting.....33
6.1.4 Disposal Procedures for Injured, Deceased, and Nesting Birds 34
6.2 MORTALITY REDUCTION MEASURES 35
6.2.1 Avoidance and Minimization.....35
6.2.2 Assessment and Implementation Approaches 36
6.2.2.1 Reactive Approach.....36
6.2.2.2 Preventative Approach.....36
6.3 AVIAN ENHANCEMENT OPTIONS.....37
6.4 MORTALITY AND MONITORING STUDIES AND MITIGATION 37
6.4.1 Goals and Objectives 37
6.4.2 Post-Construction Monitoring Components 38
6.4.2.1 Methods.....38
6.4.2.2 Monitoring Golden Eagle Nest Territories 38
6.4.3 Mitigation and Adaptive Management 39

7.0 QUALITY CONTROL.....40

8.0 PUBLIC AWARENESS 41

9.0 KEY RESOURCES 42

10.0 LITERATURE CITED 44

LIST OF TABLES

Table 1 Summary of Proposed Disturbance within the Project Area 9
Table 2 BLM Sensitive Species Potentially Occurring in the Pan Project Area 17

LIST OF FIGURES

Figure 1 Project Location
Figure 2 Proposed Facilities
Figure 3 Transmission Line Structures
Figure 4 Known Locations of Raptor Nests and Sage-Grouse Leks

LIST OF APPENDICES

Appendix A APLIC Guidance on Power Line Construction
Appendix B Avian Incident and Nest Assessment Forms
Appendix C Partial List of Avoidance and Minimization Measures for Non-Operational Impacts

LIST OF ACRONYMS AND ABBREVIATIONS

AMSL Above Mean Sea Level
APP Avian Protection Plan
BBCS Bird and Bat Conservation Strategy
BGEPA Bald and Golden Eagle Protection Act
BLM Bureau of Land Management
EIS Environmental Impact Statement
ESA Endangered Species Act
FEIS Final Environmental Impact Statement
kV Kilovolt
MBTA Migratory Bird Treaty Act
Midway Midway Gold US Inc.
MLRA Major Land Resource Area
NAC Nevada Administrative Code
NDOW Nevada Department of Wildlife
NMFS National Marine Fisheries Service
NRS Nevada Revised Statutes
PGH Preliminary General Habitat
Plan Pan Mine Plan of Operations and Reclamation Permit Application
PMU Population Management Unit
PPH Preliminary Priority Habitat
RMP Resource Management Plan
USFWS United States Fish and Wildlife Service
WRDA Waste Rock Disposal Area

BIRD AND BAT CONSERVATION STRATEGY
PAN MINE PROJECT
WHITE PINE COUNTY, NEVADA

1.0 INTRODUCTION

1.1 SCOPE

A Bird and Bat Conservation Strategy (BBCS) is a project-specific document that delineates a program designed to reduce the potential risks of avian and bat mortality that may result from the interaction of these animals with project facilities.

Due to the proximity of existing golden eagle (*Aquila chrysaetos*) nests to the proposed project facilities, this BBCS does not address potential impacts to nesting golden eagles because it is assumed that an Eagle Conservation Plan would be required. An Eagle Conservation Plan would be prepared in consultation with the United States Fish and Wildlife Service (USFWS).

The Bureau of Land Management (BLM) is currently preparing the *Midway Gold US, Inc., Pan Mine Project, Final Environmental Impact Statement* (FEIS). The FEIS would provide a project-specific analysis of the potential impacts to bats and birds resulting from the proposed Pan Mine Project. Midway Gold US Inc. (Midway) has voluntarily prepared this BBCS in compliance with federal regulations to outline project-specific practices and measures for reducing avian and bat impacts potentially resulting from the project. Where applicable, Mt. Wheeler Power would also be responsible for implementing measures to reduce avian and bat impacts resulting from the construction and maintenance of project specific power lines.

This BBCS has been developed based on recommendations from the Avian Protection Plan (APP) Guidelines prepared by the Edison Electric Institute's Avian Power Line Interaction Committee and the USFWS in 2005. The APP Guidelines provide guiding principles to utilize in the development of a BBCS and thus reduce avian mortality. The following principles are outlined in the APP Guidelines:

- Corporate Policy;
- Training;
- Permit Compliance;
- Construction Design Standards;
- Nest Management;
- Avian Reporting System;
- Risk Assessment Methodology;
- Mortality Reduction Measures;
- Avian Enhancement Options;

- Quality Control;
- Public Awareness; and
- Key Resources.

1.2 GOALS OF THE BIRD AND BAT CONSERVATION STRATEGY

The voluntary implementation of this BBCS would fulfill several goals simultaneously, and fulfillment of each of these goals would contribute to the satisfaction of the ultimate goal of all BBCSs: to reduce avian and bat mortality. The goals specific to this BBCS are to:

- Reduce the potential for avian and bat mortality by implementing specific mortality reduction actions;
- Identify and isolate where avian and bat mortality has occurred or has the potential to occur to minimize future incidents;
- Establish an avian and bat reporting system to document incidents of mortality caused by electrocution, heat, collision, and other project-related features;
- Assist Midway in compliance with state and federal laws regarding avian and bat species to avoid the threat of penalties and fines; and
- Improve Midway's reliability and services by reducing power outages due to avian and bat interactions and by reducing repair costs due to electrocution of the animals.

1.3 IMPLEMENTATION OF THE BIRD AND BAT CONSERVATION STRATEGY

Midway would do the following to implement the BBCS and thus accomplish the identified goals and Mt. Wheeler Power would do the same in reference to the construction and maintenance of power lines. These actions would also be performed routinely after implementation of the BBCS to ensure goals are not only met but also maintained. Specifically, Midway would:

- Update mapped data and develop additional data when appropriate on concentrations of avian and bat species which may be impacted by the project;
- Avoid direct impacts to nesting birds during the avian breeding season;
- Identify the environmental and behavioral factors that lead to areas of high avian or bat use and potentially higher amounts of mortality;
- Assist in refining criteria and protocols to further avian and bat conservation; and
- Ensure the accuracy and detail of incident reporting.

1.4 BENEFITS OF A BIRD AND BAT CONSERVATION STRATEGY

As the foremost goal to any BBCS is reduced avian and bat mortality, avian and bat species are perhaps the most obvious to benefit when the goals of the BBCS are accomplished. While this is true, the practical effect of such a plan may also translate to advantages for Midway. As the BBCS would reduce avian and bat mortality resulting from bird and bat interactions with Midway facilities, costs associated with avian- and bat-related outages could be avoided or held to a minimum. These costs may include monetary losses such as lost revenue during avian- and bat-caused power outages or through the payment of fines and penalties, repair costs for equipment damaged by avian and bat interaction, or administration and managerial time directed toward avian and bat conflicts. The BBCS would reduce other costs that extend beyond monetary value, such as those attributed to negative public perception. The voluntary implementation of a BBCS would also support compliance with the state and federal regulations as described in the following section.

1.5 FEDERAL AND STATE AVIAN AND BAT PROTECTION LAWS, REGULATIONS, AND POLICY

1.5.1 Migratory Bird Treaty Act

The Migratory Bird Treaty Act (MBTA) (16 U.S.C. 703-712), which is administered by USFWS, is the cornerstone of migratory bird conservation and protection in the United States. It implements four treaties that provide for international protection of migratory birds. The MBTA states: "it shall be unlawful at any time, by any means or in any manner, to pursue, hunt, take, capture, kill…possess, offer for sale, sell…purchase…ship, export, import…transport or cause to be transported…any migratory bird, any part, nest, or egg of any such bird, or any product, whether or not manufactured, which consists, or is composed in whole or part, of any such bird or any part, nest, or egg thereof." The word "take" is defined as "to pursue, hunt, shoot, wound, kill, trap, capture, or collect, or attempt to pursue, hunt, shoot, wound, kill, trap, capture, or collect." In 1972, an amendment to the MBTA resulted in bald eagles (*Haliaeetus leucocephalus*) and other birds of prey being included in the definition of a migratory bird. The MBTA currently protects more than 800 migratory bird species, including waterfowl, shorebirds, seabirds, wading birds, raptors, and songbirds (USFWS, 2008).

1.5.2 Bald and Golden Eagle Protection Act

Under the authority of the Bald and Golden Eagle Protection Act (BGEPA) (16 U.S.C. 668-668d), bald eagles and golden eagles are provided additional legal protection. The BGEPA makes it unlawful to import, export, sell, purchase, barter, or take any bald eagle or golden eagle, their parts, products, nests, or eggs. As used in the BGEPA, "take" includes pursuing, shooting, poisoning, wounding, killing, capturing, trapping, collecting, molesting, or disturbing an eagle.

1.5.3 Endangered Species Act

The Endangered Species Act of 1973 (ESA) (16 U.S.C. 1531-1544) is administered by USFWS and the Commerce Department's National Marine Fisheries Service (NMFS). USFWS has primary responsibility for terrestrial and freshwater organisms, while NMFS has responsibility for marine species. These two agencies work with other agencies to plan or modify federal projects so that they would have minimal impact on listed species and their habitats. Protection of species is also achieved through partnerships with the states, with federal financial assistance and a system of incentives available to encourage state participation.

Section 9 of the ESA makes it unlawful for a person to "take" a listed species. Under the ESA, "take" is defined as "to harass, harm, pursue, hunt, shoot, wound, kill, trap, capture, or collect or attempt to engage in any such conduct." Through regulation, the word "harm" has been defined by the Secretary of the Interior as "an act which actually kills or injures wildlife by significantly impairing essential behavioral patterns, including breeding, feeding, or sheltering." However, permits for "incidental take" can be obtained from USFWS for take of endangered species, which would occur as a result of an otherwise legal activity.

1.5.4 BLM Policy

BLM has implemented policies for special status species found on BLM-managed lands. BLM's list of special status species includes species that are listed or proposed for listing under the ESA and species requiring special management consideration to promote their conservation, and reduce the likelihood and need for future listing under the ESA. Additionally, all federal candidate species, proposed species, and delisted species (for five years after delisting) would be conserved as BLM sensitive species (BLM, 2008).

1.5.5 Nevada Regulations

The State of Nevada has identified wildlife species that are declining in their range throughout Nevada or are otherwise rare and at risk of extinction. Sensitive and protected animal species are protected in Title 45 of Nevada Revised Statutes (NRS) (NRS 501.100 through 503.104). Classification of wildlife species and related regulations are detailed in Chapter 503 of Nevada Administrative Code (NAC).

1.6 ENFORCEMENT OF THE MBTA, BGEPA, AND ESA

The MBTA is a strict liability statute wherein proof of intent is not an element of a violation. Wording is clear in that most actions that result in a "take" or possession (permanent or temporary) of a protected species can be a violation. A violation of the MBTA by an individual can result in a fine of up to $15,000 and/or imprisonment for up to six months for a misdemeanor, and up to $250,000 and/or imprisonment for up to two years for a felony. Fines may be doubled for organizations. Penalties increase greatly for offenses involving

commercialization or the sale of migratory birds or their parts. Violators of the BGEPA may be fined up to $100,000 or imprisoned for up to one year, or both. The BGEPA has additional provisions where in the case of a second or subsequent conviction of the BGEPA, penalties may be imposed of up to a $250,000 fine or two years imprisonment, or both. Felony violations of the ESA may result in fines up to $50,000 and/or one-year imprisonment (for crimes involving endangered species) and $25,000 and/or six months imprisonment (for crimes involving threatened species). Misdemeanor violations of the ESA may result in fines up to $25,000 for endangered species and $12,000 for threatened species (USFWS, 1998).

Although take is unlawful under the MBTA and BGEPA, and while the USFWS generally does not authorize incidental takes under these acts, the USFWS recognizes that some birds may be killed even after all reasonable measures to avoid a "take" are implemented. The USFWS Office of Law Enforcement carries out its mission to protect migratory birds not only through investigations and enforcement but also through fostering relationships with individuals and industries that proactively seek to eliminate impacts to migratory birds. While it is not possible under the act to absolve individuals, companies, or agencies from liability if they follow these recommended guidelines, the Office of Law Enforcement and the Department of Justice have used enforcement and prosecutorial discretion in the past regarding individuals, companies, or agencies who have made good faith efforts to avoid the "take" of migratory birds. The voluntary implementation of this BBCS is intended to proactively seek to eliminate impacts to migratory birds at the Pan Mine Project.

2.0 STUDY AREA

2.1 DESCRIPTION OF PROJECT AREA

According to the Pan Mine Plan of Operations and Reclamation Permit Application (Plan) prepared for the project, the project area is located approximately 22 miles southeast of Eureka, Nevada and 50 miles west of Ely, Nevada (Figure 1). The Plan states that the BLM Ely District Office, Egan Field Office administers all public lands within the Pan Mine Project area, which encompasses about 13,454 acres. Within this area, approximately 3,153 acres have been identified as proposed disturbance. No private, United States Forest Service, or state-owned lands are located within the Pan Mine Project area (Midway, 2012).

According to the Ely Resource Management Plan/Environmental Impact Statement (RMP/EIS) (BLM, 2007), the Pan Mine Project is located within Major Land Resource Area (MLRA) 28B. This MLRA is described in the RMP/EIS as occurring from 4,000 to 6,500 feet above mean sea level (AMSL) in basins and 6,500 to 13,000 feet AMSL in the mountains. The MLRA is also described as having bluebunch wheatgrass (*Pseudoroegneria spicata*), Indian ricegrass (*Achnatherum hymenoides*), needle and thread (*Hesperostipa comata*), muttongrass (*Poa fendleriana*), black sagebrush (*Artemisia nova*), winterfat (*Krascheninnikovia lanata*), antelope bitterbrush (*Purshia tridentata*), singleleaf pinyon (*Pinus monophylla*), and Utah juniper (*Juniperus osteosperma*).

The project area contains four vegetation community types: sagebrush community, intermountain cold desert scrub, lower montane woodland, and intermountain cliff and canyon. As many species may be found in only certain vegetation types, a discussion of what habitats are present in the project area shows if certain species may be present. Also, by describing the vegetation present in the project area, it can be determined which habitats may be the most impacted by the Proposed Action.

<u>Sagebrush Community</u>

The sagebrush community occupies approximately 63 percent of the project area in elevations ranging from 6,000 to 7,300 feet AMSL. It occurs on flats and areas with moderate to shallow slopes containing deeper soils usually adjacent to swales with gravelly, clay loam soils. Species observed in this community type during field surveys include an overstory comprised of basin big sagebrush (*Artemisia tridentata* ssp. *tridentata*), black sagebrush (*Artemisia nova*), broom snakeweed (*Gutierrezia sarothrae*), and rabbitbrush (*Ericameria* sp.). Dominant understory species includes whitestem blazingstar (*Mentzelia albicaulis*), squirreltail (*Elymus elymoides*), cheatgrass (*Bromus tectorum*), Sandberg bluegrass (*Poa secunda*), needle and thread, and saltlover (*Halogeton glomeratus*).

Intermountain Cold Desert Scrub

The intermountain cold desert scrub community occupies approximately six percent of the project area and occurs in elevations ranging from 5,900 to 6,400 feet AMSL. It occurs on flats and areas with shallow slopes in gravelly loam soils. Dominant overstory species includes shadscale (*Atriplex confertifolia*), spiny hopsage (*Grayia spinosa*), greasewood (*Sarcobatus vermiculatus*), black sagebrush, bud sagebrush (*Picrothamnus desertorum*), winterfat, and broom snakeweed. The understory is composed of grasses and forbs including desert globemallow (*Sphaeralcea ambigua*), Indian ricegrass, Sandberg bluegrass, squirreltail, cheatgrass, and saltlover. Intermountain Cold Desert Scrub occurs mostly in the lower elevations of the project area.

Lower Montane Woodland

The lower montane woodland community occupies approximately 35 percent of the project area and occurs on all slope aspects in elevations ranging from 6,500 to 7,300 feet AMSL. Dominant canopy species include singleleaf pinyon and Utah juniper with occasional occurrences of curl-leaf mountain mahogany (*Cercocarpus ledifolius*) and snowberry (*Symphoricarpos* sp.). Scattered areas within the lower montane woodland community, where rock outcrops occur on summits and side slopes, are dominated by curl-leaf mountain mahogany. Understory species includes basin big sagebrush, black sagebrush, low sagebrush (*Artemisia arbuscula*), rabbitbrush, Hood's phlox (*Phlox hoodii*), and desert frasera (*Frasera albomarginata*). Older, same-age pinyon-juniper stands in the southwest portion of the project area lack significant understory root-mass and considerable soil erosion is apparent (JBR, 2012a). This community type occurs in the southern and eastern portions of the area.

Intermountain Cliff and Canyon

The intermountain cliff and canyon community occupies approximately two percent of the project area and occurs on ridgelines in elevations ranging from 7,000 to 7,300 feet AMSL. It is commonly devoid of vegetation but would occasionally provide soil in cracks and crevices that contain various grasses and forbs. This community type occurs in the northern portion of the project area.

Other

Both reclaimed and unreclaimed pre-Midway disturbance occupies approximately five percent of the project area. Disturbed areas contain seeded species, such as crested wheatgrass (*Agropyron cristatum*) and blue flax (*Linum lewisii*), and annual invasive species, including cheatgrass, saltlover, and crossflower (*Chorispora tenella*).

2.2 DESCRIPTION OF PROPOSED PROJECT

Midway proposes to develop an open-pit gold mine within the project area with two larger pits and four small pits. Ore would be crushed on-site and then processed using a central heap leach facility. The projected mining period is 13 years, with associated construction, closure, reclamation and post-closure monitoring periods extending the project life to approximately 28 years. The pits, waste rock disposal areas (WRDAs), heap leach facility, roads, and ancillary facilities would result in about 3,200 acres of total disturbance. Upon completion of mining, the operation would be closed and reclaimed.

The Plan considers the authorized exploration disturbance in evaluating the proposed activities and mine components below.

- Establish a permit boundary that expands the 2011 exploration plan area to the Plan boundary.
- Construct, operate, close, and reclaim the following:
  - Two main open pits: the North Pan Pit and the South Pan Pit;
  - Four satellite pits: the Black Stallion, North Syncline, Syncline, and South Syncline pits;
  - Crushing facilities and associated stockpiles;
  - Two WRDAs;
  - Heap leach pad, conveyors, processing facilities, and ponds;
  - Water supply wells and delivery/storage system;
  - Haul and secondary roads;
  - Exploration within the mine area; and
  - Ancillary facilities including: power supply; stormwater controls; reagent, fuel, and explosives storage; buildings including administration, laboratory, security, warehouse, core shed, and parking; potable water supply and septic systems; maintenance shop; ready line; light vehicle wash; communications facilities; helicopter pad; plant growth medium and woody debris stockpiles; Class III waivered landfill; area for petroleum contaminated soils; monitoring wells; borrow areas; fencing; and yards and inter-facility disturbance.

The proposed surface disturbances within the Plan area are summarized in Table 1 and shown on Figure 1. Mining activities would be conducted within the facilities shown on Figure 2, while

exploration may occur anywhere within the Plan area. For permitting purposes, the mine area includes sufficient area to accommodate projected mining disturbance areas and buffer zones, as well as potential variations resulting from design modifications, such as engineering adjustments to the open pit perimeter, haul and secondary roads, and plant growth medium stockpiles. All of the areas between the mine components shown on Figure 2 are assumed to be disturbed and are categorized as "Ancillary Disturbance" as shown on Figure 2 and Table 1. Figure 2 also shows the placement of a fence to preclude access by the public and livestock.

Table 1 Summary of Proposed Disturbance within the Project Area

Component	Authorized Disturbance (acres)	Proposed Action Disturbance (acres)	Total Disturbance for Selected Alternatives (acres)
OPEN PITS			
South Pan Pit	0	247	247
North Pan Pit	0	92	92
Black Stallion Pit	0	13	13
South Syncline Pit	0	3	3
Syncline Pit[1]	0	0	0
North Syncline Pit[1]	0	0	0
WRDAs			
North and South	0	480	401
OTHER			
Roads[2]	21	160	181
Heap Leach Facility	0	321	321
Process Facilities	0	18	18
Process Ponds	0	15	15
Yards	0	15	15
Exploration	79	217	230
Ancillary Facilities	0	359	359
Inter-facility Disturbance	0	1,214	1,214
Transmission Line[3]	0	-	68
Total	**100**	**3,154**	**3,177**

[1]These pits would be covered with other facilities by the end of mining, so the total disturbance presented in this table does not include these pits.
[2]Includes the access, haul, and secondary roads.
[3]Transmission line acres accounted for in a Plan of Development submitted by Mt. Wheeler Power.

As part of the Proposed Action, Mt. Wheeler Power would construct, maintain, and supply electrical power to the project. A 69 kilovolt (kV) transmission line would ultimately connect to the Falcon to Gonder power line located approximately six miles north of Strawberry Road and U.S. Highway 50. The new 69 kV line would be built from El Dorado junction at Strawberry Road and U.S. Highway 50, west along U.S. Highway 50 (south of the Highway 50 right-of-way fence) to the mine access road, and south into the project area along the side of the mine access

road. The approximate length of the power line is 32 miles. The new 69 kV line would be constructed to avoid impacts to greater sage-grouse by approaching the project area from the west (Figure 3). The power line would consist of three conductors and one static line that would be supported with monopole structures that would be approximately 50 to 55 feet high (Figure 3). No crossbeams for the power poles are anticipated. The poles would be placed approximately 450 feet apart. Perch deterrents are requested by the BLM for protection of sage-grouse, with the intent to minimize the potential for increased predation by raptors. Line markers (flight diverters) would be placed on the lines where appropriate, to minimize avian collisions, particularly for sage-grouse. Once constructed, the minimum height above the ground for the lowest conductor would be 27 to 28 feet. Construction of this power line and maintenance road would disturb approximately 68 acres (MWP, 2012).

2.3 Avian and Bat Protection Measures and Modifications under the Proposed Action

2.3.1 Collision

2.3.1.1 Ancillary Facilities

The majority of the facilities that would be constructed for the project would be low to the ground and not likely to exceed a height of two stories. Additionally, these facilities would not be designed with windows, which would limit the potential for avian collisions. Given the design of these facilities, avian collisions would likely involve individuals flying low (landing or taking off). The use of perch deterrents on ledges, rooftops, and other areas, would limit the attractiveness of these facilities to avian species and further reduce the potential for collisions.

As the mining operations are anticipated to occur on a 24-hour basis, some lighting would be used at night. Aerial foraging avian species have been observed to feed on swarms of flying insects attracted to continuously burning artificial light sources at night (Lebbin et al., 2007). Some bat species would be anticipated to feed on swarms of insects attracted to artificial light sources as well, considering flying insects are primary forage for many bats. Birds and bats could potentially collide with the light pole structures while foraging.

2.3.1.2 Transmission Lines and Power Poles

This section, as well as Section 2.3.2, outlines transmission line and power pole design standards that Mt. Wheeler Power would be responsible for an effort to reduce avian and bat impacts. The transmission line poles would be constructed by Mt. Wheeler Power as typical monopole structures with three conductors and one static line. The monopole structures would require the use of guy wires for stability. The guy wires would lead from the ground to the pole to provide support. Both the static line and the guy wires are typically the smallest diameter wires and therefore the most likely to be involved in any collisions. Any static lines and guy wires would

be marked with recommended bird deterrent devices such as aerial marked spheres or spiral diverters (APLIC, 2012; USFWS, 2000).

In coordination and consultation with BLM and the Nevada Department of Wildlife (NDOW), the transmission line poles outside of the project perimeter fence, which separates facilities inside the plant fence from undisturbed foraging habitat, would be constructed by Mt. Wheeler Power with anti-perch devices, which would reduce avian use of the power poles and prevent raptors from preying on small mammals or other birds from perched positions on the poles. However, the power lines between poles may also be used as perches, especially for smaller raptors and corvids. Appendix A contains designs used to minimize the ability for raptors to perch on the power poles (APLIC, 2006).

Static transmission lines are the smallest diameter lines and therefore are potentially the most difficult for birds to see and avoid. In order to minimize collisions, static lines would undergo wire marking in areas of greatest risk for collision, these would be determined through consultation with BLM and NDOW. Typical, commonly accepted wire marking methods would be used as needed, including placing colored coils or hanging reflective/colored material from the static lines. Additionally, a portion of the transmission line would be constructed adjacent to two existing overhead transmission lines. This may contribute to the improved visibility of transmission lines since more would be present in a concentrated area.

2.3.2 Electrocution

The transmission line poles would be typical monopole structures constructed of a single wooden pole set up right into the ground without a continuous foundation. The transmission line would consist of three conductors as well as a single static line at the top. The distance between the three conductors would be a minimum of five feet on the tangent structures.

The use of wood reduces the potential for electrocution because wood is a poor conductor of electricity and there are fewer potential circuits present than when metal poles are used. Additionally, the power poles would be constructed in accordance with the raptor-safe design criteria recommended by the APLIC (2006). The APLIC recommends at least five feet of clearance between phases and any electrical ground. Each phase of the three-phase transmission line at the project would be spaced approximately five to seven feet from each other, depending on the power pole structure. There would be between six and seven feet of clearance from the upper conductor line and the single static line at the top (Figure 3). This would prevent birds, including golden eagles, which are expected to be the largest bird in the area, from completing an electrical circuit and suffering electrocution through the transmission lines. Appendix A contains the measures that may be used on the power poles to minimize the potential for electrocution of avian species.

2.3.3 Process Ponds

The two process ponds would contain liquid for the life of mine, approximately 13 years. These ponds would contain a solution containing sodium cyanide and potentially heavy metals and salts. When cyanide is ingested in migratory birds or bats, hydrocyanic acid can form within the individual and death results within one hour. If less than toxic levels are ingested, the cyanide is rapidly metabolized and excreted without apparent latent toxicity. Cyanide is not known to bioaccumulate in avian or bat species (Henny et al., 1994; O'Shea et al., 2000).

To reduce potential bat and avian mortality at the ponds, Midway would incorporate several protection measures, listed below, into the design and operation of the ponds. Within Nevada, these ponds are regulated by the Nevada Division of Environmental Protection and NDOW. Any water that may be deleterious to wildlife is regulated under NRS 502.390 and 503.430 and in particular, the applicant must obtain an industrial pond permit. The permit requires certain design parameters be incorporated and monitoring actions be enforced.

The process ponds would be constructed with side slopes of 3H:1V (Horizontal:Vertical) or steeper. This would ensure that there are no shallow areas in the ponds that would encourage or facilitate avian wading. Additionally, the ponds would be designed and operated so that a minimum freeboard of two feet is maintained at all times. The freeboard is essentially the distance from the top of the water surface to the top of the containment berm. The freeboard area would also be constructed to slopes of at least 3H:1V, ensuring that there are no gradual approaches or entry points to the ponds. The steep 3H:1V slope approach to the water surface would be difficult for birds to negotiate and would assist in deterring avian use of the water.

Even with these designs built into the construction of the process ponds, there would still be the potential for avian species to land on and use these ponds, particularly waterfowl. Therefore, the process solutions would be kept at a pH above 9.0 so that cyanide would not off-gas above the ponds. In addition, in order to prevent species from landing on the ponds, the entire surface would be covered with floating, hollow, high density polyethylene bird discs, called Phoenix Floats (phnxplastics.com), or similar deterrents. Phoenix Floats are hexagonal in shape and float on the surface of the ponds. The hexagonal shape allows them to float up on one another as the pond level drops and easily slide back off when the level rises so that there is never a time when process solutions are exposed. The hexagonal shape allows them to fit tightly together without gaps between them as bird balls would allow. Bird discs disguise the water and birds do not see these areas as containing water. The bird discs would fluctuate to the level of water in the ponds, readily shift around any in-water obstacles, and, because they are relatively flat, are unaffected by winds. While there have been no independent studies on the efficacy of bird discs, they are now the accepted mitigation measure used to deter avian use of industrial ponds.

Netting would not be used at the site because of the ambient weather in the area. In this climate, netting of a sufficiently small size to keep birds out cakes with wet snow and ice. When this occurs, it becomes weighted down, eventually tearing and sinking, or tearing its anchors out and sinking. For these reasons, floating bird discs are a much more effective, and adequate, means of preventing avian and bat mortality.

No standing solution is anticipated on top of the heap leach facility. The heap leach facility would be constructed from crushed or run of mine material with a minimum slope of one percent. Solution would be distributed through a drip system or using spray emitters and the heap designed with high permeability for solution to flow quickly into the heap leach facility. If any ponding is observed, it would be quickly remedied by ripping the surface to allow for faster permeability of the solution. No open solution ditches would be utilized as part of the heap leach facility. Solution would flow through perforated pipes in lined ditched covered with gravel and rock.

With the mitigation measures described above, it would be highly unlikely that any use of the ponds by avian or bat species would occur. However, if an actual impact beyond that anticipated occurs, potential additional mitigation would be determined collaboratively among Midway and USFWS, NDOW, and BLM. Several factors would be considered when making the determination, such as the avian or bat species impacted; whether that species is listed as threatened or endangered; the rarity of the species; the effects to the population level of that species; whether previous mortality of the species has been reported at the ponds; and total mortality of all species reported at the process ponds.

2.3.4 Greater Sage-Grouse Protection Measures

As part of the EIS process, a project-specific mitigation plan was developed. The following actions were included in the mitigation plan in order to minimize the possibility of impacting greater sage-grouse breeding, nesting, and brood rearing habitat (BLM, 2013a).

The on-site mitigation provided below has been developed in response to impacts to greater sage-grouse from raptors perching on power lines near leks that facilitate predation and from noise and human activity that can cause mortality. During the spring of 2013, ambient noise levels were measured at the lek sites. The modeled results exceed the impact threshold of 10 dBA at the Southwest Pancake lek from construction activities and at the East Blackpoint lek from mining activities.

The off-site mitigation provided below has been developed in response to permanent disturbance to greater sage-grouse Preliminary Priority Habitat (PPH) and Preliminary General Habitat (PGH).

These actions can also protect other avian species and Midway would implement the following measures:

On-Site Mitigation

- Modified transmission line structures, including line strike diverters, and perch deterrents would be used for proposed transmission lines constructed within 3.2 miles of known greater sage-grouse leks of unknown and active status and within PPH and PGH designated habitats or as determined by consultation with BLM and NDOW biologists. All modifications to the transmission lines, including line strike diverters, and perch deterrents would be approved by BLM, NDOW, and or the USFWS prior to installation. Consultation with Mt. Wheeler Power would occur in reference to the utilization of said power lines.

- No construction or new ground disturbance would occur from March 1 through May 15 from one hour before sunrise to three hours after sunrise, within two miles of active greater sage-grouse leks.

During the spring of 2013, ambient noise levels were measured at the lek sites. The modeled results exceed the impact threshold of 10 dBA at the Southwest Pancake lek from construction activities and at the East Blackpoint lek from mining activities. Midway would limit noise at leks to less than 10 decibels above ambient from March 1 through May 15 from one hour before sunrise until three hours after sunrise. Midway would submit a plan subject to BLM approval that specifies the steps Midway would take to ensure that noise levels would remain below 10 decibels greater than ambient. Midway would conduct noise monitoring between March 1 and May 15 of each year to ensure that noise levels are achieved. If monitoring shows that noise thresholds are exceeded, Midway would employ mitigation measures as outlined in the BLM-approved plan. Suggested mitigation measures include:

- Restrict activities from March 1 through May 15 from one hour before sunrise until three hours after;

- Reduce vehicle speed limits on the access road during the period from March 1 through May 15;

- Restrict the use of engine brakes; and

- Other appropriate mitigation measures that reduce noise levels at leks.

Off-Site Mitigation

Off-site mitigation would be developed and approved by the BLM, of which the key components would include:

- Complete off-site mitigation of disturbed PPH on a three to one basis, meaning that for every one acre that is disturbed by the project within PPH, Midway would restore or enhance three acres of habitat either adjacent to the project, within the Diamond Population Management Unit (PMU), or within adjacent PPH habitats.

- Complete off-site mitigation of disturbed PGH, on a two to one basis.

Midway would be given a mitigation offset for the cost of the United States Geological Survey sage-grouse study for up to 50 percent of its total mitigation obligation from the project.

A Wildlife Working Group would be established and would consist of members from BLM, NDOW, and Midway to determine specific off-site mitigation steps, ensure compliance, and monitor progress.

3.0 SPECIES OF INTEREST

3.1 SENSITIVE SPECIES CRITERIA AND UTILIZATION OF PROJECT AREA

In this BBCS, the term "sensitive species" encompasses all avian and bat species that are protected by any one or more of the laws, policies, or regulations described in Section 1.5. Specifically, this includes:

- All avian and bat species that are listed as threatened or endangered species or are proposed or candidates for listing under the ESA as amended;
- All avian species extended protection under the MBTA;
- Bald eagles and golden eagles extended protection under the BGEPA;
- All avian or bat species that the State of Nevada extends protection to through NRS 501.100–503.104, NRS 527.050, and/or NRS 527.60–527.300; and
- All species identified as BLM sensitive species in Nevada.

Regardless of whether a bat or bird species is protected by regulation, law, or agency directive, the ultimate goal of this BBCS is to provide protection to all avian and bat species that may interact with the project facilities.

3.2 SENSITIVE SPECIES POTENTIALLY OCCURRING WITHIN THE PROJECT AREA

According to the Draft EIS prepared for the project (BLM, 2013b), a concise list of potentially occurring protected wildlife species was compiled from data from the USFWS; the BLM Sensitive Species list for Nevada; the Nevada State Protected, Threatened, and Sensitive Species lists in NAC 503.030, NAC 503.050, NAC 503.075, and NAC 503.080; and from surveys conducted in and around the project area. Biologists from USFWS, BLM, and NDOW were consulted on several occasions to provide additional input regarding sensitive species. The Draft EIS also lists the potential likelihood of each identified species to occur within the project area. According to the Draft EIS, the sensitive species listed in Table 2 have been observed in the project area or have potential to occur in the project area.

Table 2 BLM Sensitive Species Potentially Occurring in the Pan Project Area

Species Name		Potential to Occur on Project Site	Documented During Surveys
Common	**Scientific**		
Pallid Bat	*Antrozous pallidus*	Potential roosting habitat is available in rocky outcrops within and adjacent to the project area.	No
Townsend's Big-Eared Bat	*Corynorhinus townsendii*	Potential roosting habitat is available in rocky outcrops within and adjacent to the project area.	No
Big Brown Bat	*Eptesicus fuscus*	Potential roosting habitat is available in rocky outcrops within and adjacent to the project area.	No
Spotted Bat	*Euderma maculatum*	Potential roosting habitat is available in rocky outcrops within and adjacent to the project area.	No
Greater Western Mastiff Bat	*Eumops perotis*	Potential roosting habitat is available in rocky outcrops within and adjacent to the project area.	No
Allen's Lappet-Eared Bat	*Idionycteris phyllotis*	Potential roosting habitat is available in rocky outcrops within and adjacent to the project area.	No
Silver-Haired Bat	*Lasionycteris noctivagans*	Potential roosting habitat is available in rocky outcrops within and adjacent to the project area.	No
Western Red Bat	*Lasiurus blossevillii*	Potential roosting habitat is available in rocky outcrops within and adjacent to the project area.	No
Hoary Bat	*Lasiurus cinereus*	Potential roosting habitat is available in rocky outcrops within and adjacent to the project area.	Yes
California Leaf-Nosed Bat	*Macrotus californicus*	Potential roosting habitat is available in rocky outcrops within and adjacent to the project area.	No
California Myotis	*Myotis californicus*	Potential roosting habitat is available in rocky outcrops within and adjacent to the project area.	No
Small-Footed Dark-nosed Myotis	*Myotis melanorhinus*	Potential roosting habitat is available in rocky outcrops within and adjacent to the project area.	Yes

Species Name		Potential to Occur on Project Site	Documented During Surveys
Common	**Scientific**		
Long-Eared Myotis	*Myotis evotis*	Potential roosting habitat is available in rocky outcrops within and adjacent to the project area.	No
Little Brown Myotis	*Myotis lucifugus*	Potential roosting habitat is available in rocky outcrops within and adjacent to the project area.	No
Fringed Myotis	*Myotis thysanodes*	Potential roosting habitat is available in rocky outcrops within and adjacent to the project area.	No
Long-Legged Myotis	*Myotis volans*	Potential roosting habitat is available in rocky outcrops within and adjacent to the project area.	Yes
Yuma Myotis	*Myotis yumanensis*	Potential roosting habitat is available in rocky outcrops within and adjacent to the project area.	No
Western Pipistrelle	*Pipistrellus hesperus*	Potential roosting habitat is available in rocky outcrops within and adjacent to the project area.	No
Brazilian Free-Tailed Bat	*Tadarida brasiliensis*	Potential roosting habitat is available in rocky outcrops within and adjacent to the project area.	Yes
Golden Eagle	*Aquila chrysaetos*	Potential roosting habitat is available in rocky outcrops within and adjacent to the project area.	Yes
Northern Goshawk	*Accipiter gentilis*	Potential nesting habitat is available in trees within and near the project area. However, no aspen is present.	No
Western Burrowing Owl	*Athene cunicularia*	Potential nesting and foraging habitat is available throughout the project area.	Yes
Ferruginous Hawk	*Buteo regalis*	Potential nesting and foraging habitat is available in pinyon-juniper woodland throughout the project area.	Yes
Swainson's Hawk	*Buteo swainsoni*	Potential nesting and foraging habitat is available throughout the project area.	Yes
Peregrine Falcon	*Falco peregrinus*	Potential foraging habitat is available throughout the project area.	No
Greater Sage-grouse	*Centrocercus urophasianus*	Potential nesting and foraging habitat is available throughout the project area.	Yes

Species Name		Potential to Occur on Project Site	Documented During Surveys
Common	**Scientific**		
Pinyon Jay	*Gymnorhinus cyanocephalus*	Potential nesting and foraging habitat in pinyon-juniper woodlands is available throughout the project area.	Yes
Bald Eagle	*Haliaeetus leucocephalus*	Potential nesting habitat is available throughout and adjacent to the project area. Potential foraging habitat is available throughout the project area.	No
Loggerhead Shrike	*Lanius ludovicianus*	Potential nesting and foraging habitat is available throughout the project area.	Yes
Black Rosy Finch	*Leucosticte atrata*	Potential winter habitat is available throughout the project area.	No
Sage thrasher	*Oreoscoptes montanus*	Potential nesting and foraging habitat is located throughout the project area.	No
Brewer's sparrow	*Oreoscoptes montanus*	Potential nesting and foraging habitat is available throughout the project area.	Yes

During field surveys of the project area, an AnaBat detector was used along rocky outcrops near the proposed mine and along foraging habitat within the Southwest Power Line Alternative. Four species of bat (hoary bat, small-footed dark-nosed myotis, Brazilian free-tailed bat, and long-legged myotis) were detected. Suitable roosting habitat for the other bat species is present in and around the project area. Through consultation with NDOW, three sage-grouse leks were identified within three miles of the project area that were of concern (Figure 4). Two of these leks are identified as active and one is inactive.

Most avian species that occur within the project area would be considered protected species under the MBTA, as the act protects all native birds commonly found within the Ely District, with the exception of gallinaceous species (upland game birds) and introduced, non-native species. Other birds, such as the golden eagle or pinyon jay, are protected by the MBTA in addition to other listings, such as the BGEPA or listing on the Nevada BLM Sensitive Species list. Other birds, such as greater sage-grouse, are not protected under the MBTA but are listed as a candidate species for listing under the ESA.

Both ground surveys and aerial surveys for nesting golden eagles were conducted in 2011, 2012, and 2013 (JBR, 2012b, 2012c, and 2013). The aerial survey in 2011 was conducted on June 28 and the ground survey was performed in early July. The 2011 survey area included a five-mile buffer from the proposed project area and transmission line. The 2012 surveys were conducted

outside the nesting season for golden eagles (i.e., August 3 and 4), nonetheless, documented existing golden eagle nests. The 2012 survey area included a five-mile buffer of the Southwest Power Line Alternative transmission line, which generally overlaps the project area boundary.

During the aerial survey conducted during the 2011 nesting season, one active/occupied golden eagle nest and 16 inactive golden eagle nests were located. Two unoccupied golden eagle nests were located within the proposed mine project area. Both nests are in proximity to each other (~0.1 mile apart), which means they are likely alternate nests within a nesting territory. These nests are located in the northern portion of the Pancake Range (Figure 4) and are within 0.30 mile from a proposed WRDA. Both nests would have clear views of the proposed mine and main access road. During the 2011 aerial survey and subsequent ground survey, no activity was observed although both nests were in good condition. The active and occupied golden eagle nest found during the 2011 raptor survey is located near Island Mountain in the southern portion of the Diamond Mountains north of U.S. Highway 50. During the aerial survey, a single golden eagle was observed in the nest and given the time of year, the eagle may have been a fledgling. During the ground survey, an adult golden eagle was seen circling in the area. This nest was approximately four miles northwest of the project area (JBR, 2012b). The 2012 survey, within five miles of the Southwest Power Line Alternative route, identified more golden eagle nests; however, since the survey was conducted outside the nesting season, the status of the nests was not determined (JBR, 2012c). Although all nests were unoccupied at the time of the survey, two nests appeared to be active in 2012, based on the presence and amount of whitewash. The two nests within the mine boundary appeared maintained but whitewash was not noted. The aerial survey in 2013 was conducted on May 7, 2013 and the ground survey was performed on June 24 through 28 and July 12, 2013. The 2013 survey area included a 10-mile buffer from the proposed project area and the Southwest Power Line Alternative. During the 2013 surveys, 33 golden eagle nest sites were identified, in addition to the 19 nest sites previously identified (JBR, 2013). Great Basin Ecology, Inc. conducted aerial surveys for an adjacent project in June 2013. These surveys resulted in an additional eight nests, three of which were thought to have been used in the 2013 nesting season (GBE, 2013). The two golden eagle nests within the northern portion of the project area were unoccupied in 2013, and have been since their discovery, as were 13 other previously identified golden eagle nests. Four golden eagle nest sites, identified in the 2011 survey, were not observed during the 2013 survey. At this time, there are a total of 52 identified golden eagle nesting territories representing 62 nests within a 10-mile buffer of the project area, including the two nests within the project area (JBR, 2013). All JBR-identified raptor nests are displayed on Figure 4. However, the information displayed on Figure 4 is at the Section level; therefore, multiple nests may be present within a highlighted Section.

During all three years of raptor surveys, active/occupied nests for ferruginous hawk, prairie falcon (*Falco mexicanus*), and turkey vulture (*Cathartes aura*) have been observed (Figure 4). Additionally, numerous potential raptor nests have been found in the three years of surveying. Other raptors observed in or near the project area included northern harrier (*Circus cyaneus*), red-tailed hawk (*Buteo jamaicensis*), western burrowing owl, and Swainson's hawk.

Information was also obtained from NDOW relating to documented golden eagle and other raptor nests within a 10-mile radius of the project area. Nesting locations provided by NDOW include golden eagle, western burrowing owl, ferruginous hawk, and prairie falcon (Figure 4).

In addition to raptors, greater sage-grouse are known to occur in the vicinity of the project area. Populations of greater sage-grouse are allied closely with sagebrush (Connelly et al., 2000). The species has been identified as a sagebrush obligate, meaning that it requires sagebrush for some part of its life cycle. They use sagebrush for roosting, cover, and food. During the winter, more than 99 percent of their diet consists of sagebrush leaves and buds (NRCS, 2006).

The project area overlaps the Diamond PMU and the Butte/Buck/White Pine PMU. The boundary between these two greater sage-grouse specific management areas splits the project approximately in half. Greater sage-grouse from these two PMUs use the northern portion of the Pancake Range throughout the year, although only a small amount of data specific to this population's year-round whereabouts exists (Podborny, 2012).

The PPH and PGH data and maps for greater sage-grouse have been developed through a collaborative effort between the BLM and NDOW. The maps use existing data to create a statewide prioritization of greater sage-grouse habitat.

In addition to the suitable greater sage-grouse habitat associated with the project area, three greater sage-grouse leks have been identified within three miles of the project area. These leks are identified as the Southwest Pancake Summit, the East Black Point, and the Northeast Black Point leks. The Southwest Pancake lek and the East Black Point lek are considered "Active" by NDOW. The Southwest Pancake lek and the East Black Point lek represent significant breeding grounds for the population associated with the project area (NDOW, 2012). Only leks having the highest potential for impacts are presented on Figure 4. Greater sage-grouse and their sign were observed during the baseline surveys (JBR, 2012c).

The three greater sage-grouse leks identified within three miles of the project area have been monitored by NDOW for a number of years, two of which appear to have relatively high lek attendance (Figure 4). The Southwest Pancake Summit lek was identified in 1997 and historic counts show a peak of 23 male birds, a low of six, and an average count of 15. The East

Blackpoint lek was also identified in 1997 and historic counts show a peak of 76 male birds, a low of 21, and an average count of 36. The Northeast Black Point lek was identified in 1995 with 11 males that year but has shown no activity during subsequent visits. Each of the three leks shows a downward long-term trend.

Of the three leks that occur in the vicinity of the project area, the Southwest Pancake Summit lek is approximately 0.9 mile east of the proposed access road. The East Blackpoint lek is approximately 0.9 mile west of the proposed mine boundary, while approximately two miles east of the power line, but is out of line of sight of the power line. The third lek, Northeast Blackpoint lek is approximately 2.2 miles south of the terminus of the proposed power line. Only leks within three miles of the proposed project area and associated actions were assessed in the EIS (BLM, 2013b).

Other special status bird species that could potentially utilize the project area are shown in Table 2, which only represents a fraction of the birds that could utilize the project area. Avian species composition and density in the project area would vary with season and available habitat type.

4.0 THREAT ASSESSMENT

4.1 PAN MINE PROJECT COMPONENTS

The following are mine project components that may pose mortality or injury threats to avian and bat species that may use the project area.

4.1.1 Open Pits

Avian species potentially utilizing the open pits may include raptors and corvids (ravens and crows), which may find the uneven pit walls suitable for nesting. The open pit may also provide perching opportunities for raptors. However, the mining operations at the open pits are anticipated to be conducted continuously (24 hours a day, seven days a week). Additionally, an average of one blast per day is anticipated. The combined activity in the open pits would likely be sufficient to prevent any long-term nesting attempts by raptors or other species. As previously mentioned, activity in the open pits would occur at night and would therefore require the use of artificial lighting. This lighting is likely to attract insects, which may in turn attract bats to the area.

4.1.2 Process Ponds

The proposed project would require the use of two processing ponds for barren and pregnant solution. The solution is directed to the ponds from the heap leach facility. Pregnant solution is the solution from the leach facilities that contains appreciable gold content while the barren solution has had any gold removed. The fluids and chemicals that would be stored in the two processing ponds would be a closed loop system where fluids from the barren pond are used in the heap leach facilities. That fluid is then processed from the pregnant solution pond, the gold removed, and then cycled back to the barren pond.

The two ponds would be constructed to a 15-foot depth with 30-foot-wide crests to provide access. The two ponds would be sized to contain the following components:

- Dead storage for pump operations (bottom four feet of the pond);
- Operating processing fluid storage;
- Draindown process fluid storage;
- Storage of projected accumulations from a 100-year, 24-hours storm event; and
- Freeboard (top two feet of the pond).

Given the general lack of free-standing water in the region, avian species would likely be attracted to the two ponds. While many species of migratory birds may use the ponds, the most logical species include ducks and wading birds. In addition to avian species, the presence of water would likely attract insects, which in turn would attract bats and birds to the area.

4.1.3 Transmission Lines and Power Poles

Transmission lines and poles may potentially be utilized as perching and roosting habitat for many bird species. Regardless of whether they are foraging or nesting, birds on or near the ground surface may feel susceptible to predators. Since the transmission lines and poles would be located well above the tallest vegetation in the project area, birds perched or roosting on these structures have a more open and distant view of their surroundings. The awareness of their surroundings, combined with the protection of perching or roosting at heights well above terrestrial predators, would appeal to many species.

Raptors are opportunistic and may use power poles for a number of purposes, including nest sites, high points from which to defend territories, and perches from which to hunt prey. Hunting from a perched position is energetically efficient for a bird, provided the bird has a view of quality prey habitat. Generally, the power poles would place raptors at a considerable elevation above the surrounding terrain, offering an ideal hunting position and high point for defending territory. Nesting on power poles would allow a raptor a high point from which to defend the nest and diminishes the threat of nest predation from reptiles and mammals.

4.1.4 Ancillary Facilities

The proposed project would involve the construction of numerous ancillary facilities within the project area, as listed below. These facilities would provide suitable nesting substrate to several small to mediums sized avian species in the project area. Several of the ancillary facilities would also have the potential to introduce alternate sources of water in the area (e.g. light vehicle wash, potable water system, etc). These areas would have the potential to attract various migratory birds.

- Reagent, fuel, and explosives storage;
- Buildings including administration, laboratory, safety/security, truck shop, warehouse, helicopter pad, and associated parking;
- Potable water and septic systems;
- Fire water supply;
- Waste management including a Class III landfill;
- Ready line (temporary equipment staging area);
- Light vehicle wash;
- Communication facilities;
- Area to store petroleum contaminated soils;
- Monitoring wells;
- Borrow areas;
- Plant growth medium and woody debris stockpiles;
- Fencing; and
- Yards and inter-facility disturbance.

4.2 CAUSES OF AVIAN AND BAT MORTALITY

Section 2.3.1 discusses the protection measures and modifications for the proposed project that would occur to reduce the potential for mortality occurring from collision, electrocution, and the process ponds. This section discusses the various environmental conditions, species behavior and agility, etc. that can cause avian and bat mortality.

4.2.1 Collision

4.2.1.1 Ancillary Facilities

The potential for avian and bat species to collide with the various support buildings under the proposed project would be present when avian species are in flight during adverse environmental conditions, such as rain, fog, strong winds, or other similar periods of low visibility. Avian and bat species are also subject to collision with the facilities when flying while distracted. Potential distractions could include foraging, territorial chases, escape from predators, nearby human activity, or other such action that results in aggressive and swift flight, or erratic and fear-driven flight. Birds do collide with windows in buildings, which may be due to the reflections of surrounding landscape in the windows (Cornell, 2013). Microwave towers and repeaters are proposed for communications, these towers have not generally been implicated as hazards to birds or bats, though any structure may pose a collision hazard.

4.2.1.2 Transmission Lines and Power Poles

Avian and bat species are susceptible to collisions with the transmission lines and power poles, particularly newly installed ones.

The risks to avian species relate to a species characteristics; in particular the birds' body size, weight, wing shape, flight behavior, and nesting habits. For example, literature shows that, in general, birds of prey are good fliers, have the ability to avoid obstacles, and are not prone to collisions. It is when they are engaged in certain activities (e.g., territorial defense, pursuing prey) that their collision risk increases (Harness et al., 2003; Olendorff and Lehman 1986 as cited by APLIC, 2012).

These same risk factors could be cross-walked to bat species. Bats are most active in low-light to dark hours. While bats typically navigate and forage by emitting and receiving high-frequency sound (echo-location), bats not actively echo-locating may fail to detect the transmission lines or poles when in flight.

Avian species have been documented colliding with transmission lines and a number of factors contribute to this risk. APLIC (2012) outlines collision risk factors for avian species, these include:

- Exposure to collisions is largely a function of behavior. Specific behaviors (such as flushing, courtship displays, and aerial hunting) may distract birds from the presence of power lines;
- Exposure is increased for birds that make regular and repeated flights between nesting, feeding, and roosting areas in proximity to power lines;
- Susceptibility to collisions is partially a function of wing and body size and vision. Larger, heavy-bodied birds with short wing spans and poorer vision are more susceptible to collisions than smaller, lighter-weight birds with relatively large wing spans, agility, and good vision;
- Environmental conditions (such as inclement weather and darkness) may distract birds from the presence of power lines or obscure their visibility; and
- Engineering aspects, including design and placement, can increase or decrease the exposure for collisions.

4.2.2 Electrocution

4.2.2.1 Transmission Lines

Avian electrocutions can occur when a bird completes an electric circuit by simultaneously touching two energized parts or an energized part and a grounded part of the electrical equipment. The reason birds may complete an electric circuit can be attributed to two interrelated factors: environmental factors and engineering factors (APLIC, 2006 and 2012).

Environmental factors are naturally occurring factors that affect avian use of power poles. The behavioral and biological characteristics unique to individual avian species determine in part how that species would utilize power poles, and affect their potential to suffer electrocution from such use. Behavioral and biological characteristics include the physical size and shape, foraging characteristics, flight pattern, and territorial traits of the species. Environmental factors also include the natural topography of the area, vegetation in the area, available forage and prey in the area, and weather. These factors affect the behavior of birds. Eagles are the most commonly reported electrocuted avian species, with golden eagles reported to suffer electrocution 2.3 times more frequently than bald eagles (Manville, 2005).

Engineering factors include the physical design and construction of the electrical system, including the transmission lines, power poles, transformers, and other components of the system. A bird may potentially come into simultaneous contact with two energized conductors or an

energized conductor and grounded hardware if the spacing between any of these two components is inadequate. If such contact were to occur, an electric circuit would be completed and electrocution would result (APLIC, 2006 and 2012).

4.2.2.2 Bird Nesting

Nests on power transmission structures that pose the greatest risk to birds are those that are built in close proximity to energized conductors and hardware. While a nest that is not in close proximity to energized parts may not be an electrocution risk in and of itself, it would tend to cause the parent bird and possibly nest predator birds to routinely land on other parts of the power pole or surrounding poles that may be unsafe (APLIC, 2006 and 2012). In the project area, the species most likely to nest on power poles are ravens and raptors.

4.2.3 Process Ponds

Since existing water sources are relatively scarce in the region surrounding the project area, process ponds tend to attract bats and various avian species. Both the pregnant and barren process ponds would contain high levels of contaminants that if ingested, could result in mortality of an individual. The primary contaminant in these ponds that poses a threat to avian and bat species is sodium cyanide. Sodium cyanide has been implicated in the deaths of thousands of avian species in Nevada (Henny et al., 1994). The majority of these deaths occurred from ingestion of cyanide at the ponds or from small puddles if free-standing sodium cyanide exists on top of the leach pile. While ingestion is generally thought to be the primary method of cyanide mortality, inhalation and percutaneous exposure (i.e. physical contact) are also possible.

Bats could potentially ingest the leach solution from the ponds and consequently suffer cyanide toxicity, which could cause illness or death of the bat (O'Shea et al., 2000). Bats that forage on insects at the process ponds or near the ponds could potentially fall into the ponds and drown if no escape route is available or found. Bats and birds that have fallen into ponds may also be identified as ideal prey by raptors since they may become exhausted or distracted while struggling to escape the water. Additionally, bats that feed on insects that are found near the ponds could indirectly ingest the cyanide.

4.3 EFFECTS TO AVIAN AND BAT SPECIES

4.3.1 Effects from Project Construction

4.3.1.1 Open Pits and Waste Rock Disposal Areas

As a result of project construction removing approximately 835 acres of potential foraging habitat for special status bat species and golden eagles and nesting and foraging habitat for migratory birds, direct impacts would occur to golden eagles and migratory birds. However, the project would not restrict bird movement throughout the area, nor would it restrict bat movement

throughout the Lower Newark Valley. Most of this habitat consists of sagebrush community, which is the dominant habitat in the surrounding area.

Most birds are highly mobile, and initial construction activities would not occur during nesting periods; therefore, it is unlikely that grading activities associated with project construction would result in bird injury or death because most birds can flee the area. However, a few species such as burrowing owls may be more susceptible to injury or death during grading activities because they may hide in their burrows and not be able to flee in time. Grading activities could destroy nests; however, disturbances to nesting birds would be circumvented by avoidance and minimization measures discussed in Section 6.2.1.

Increased noise levels during construction may cause birds to avoid the area temporarily, possibly disrupting normal behavior patterns. Increased noise levels have been shown to adversely affect greater sage-grouse and golden eagles. Lyon and Anderson (2003) showed that increased noise levels near leks that repeatedly disturb birds may lead to males and females abandoning leks. A total of three leks (two active and one inactive) occur within three miles of the project area and may therefore be impacted. Suitable nesting habitat for golden eagles is present within one mile of the proposed project area. General reactions of golden eagles to noise and disturbance include (Pagel et al., 2010):

- Agitation behavior (displacement, avoidance, and defense);
- Increased vigilance at nest sites;
- Change in forage and feeding behavior; and
- Nest site abandonment.

While golden eagles may be initially disturbed by an increase of noise in the project area, they have been known to habituate to increased noise levels. Over time and with regular exposure to the increased noise levels, an individual may return to near baseline behavior.

4.3.1.2 Transmission Lines and Power Poles

Direct effects to golden eagles and migratory birds from construction activities would be similar to those associated with construction of the open pits and WRDAs in that potential foraging habitat would be lost. The construction of the Southwest Power Line Alternative would disturb approximately 68 additional acres.

Direct effects to bats from the Southwest Power Line Alternative construction activities would be similar to those associated with the Proposed Action and construction of the open pits and WRDAs in that an additional 84 acres of potential foraging habitat would be lost.

4.3.1.3 Process Ponds

Direct effects to golden eagles and migratory birds associated with construction of the process ponds would be the same as those associated with construction of the pits and WRDAs, transmission line, and power poles in which 15 acres of potential foraging habitat would be lost.

Direct effects from construction of the evaporation ponds to a variety of bat species would include the temporary removal of approximately 15 acres of potential foraging habitat. Construction of the process ponds would not restrict bat migration throughout the area.

4.3.1.4 Ancillary Facilities

Direct effects to golden eagles and migratory birds associated with construction of the ancillary facilities would be the same as those associated with construction of the other components as described above in which 2,338 acres of potential foraging habitat would be lost.

Direct effects from construction of the ancillary facilities to a variety of bat species would include the removal of approximately 2,338 acres of potential foraging habitat. Construction of the ancillary facilities would not restrict bat migration throughout the area.

4.3.2 Effects from Project Operations

4.3.2.1 Open Pits and Waste Rock Disposal Areas

A potential direct effect of the project operations on golden eagles, migratory birds, and bats is the death or injury resulting from blasting operations associated with pits development. Blasting is anticipated to occur on a daily basis. Any avian species in the vicinity of the blasting operations would potentially suffer mortality or injury directly from the blast or from flying debris. This impact would be alleviated somewhat by the around-the-clock activity at the open pits, which tends to keep wary wildlife away. The daily blasting itself may aid in deterring any avian or bat species from entering the blast radius although a small number of individuals may enter the area after the charges are set and before they are detonated.

As stated in Section 4.3.1.1, an increase of people and noise from project operations at the open pits could impact golden eagles or greater sage-grouse. However, while construction impacts are generally short-term and would end after a relatively short period (six to nine months), the impacts from project operations would be long-term and last for the life of the mine.

4.3.2.2 Transmission Lines and Power Poles

Direct effects on migratory birds resulting from project operation of the transmission line may include injury or mortality from transmission line collisions and/or electrocutions, as discussed in Section 4.2.

In addition to collisions and electrocutions, electromagnetic fields may affect birds that roost or nest near transmission lines. Electromagnetic fields could affect a number of factors including but not limited to fertility rates, nest success, egg quality, and hatch success. Some studies suggest that effects of electromagnetic fields are species-specific, so the complete range of effects for birds in the area is unknown (BLM, 2013b).

Not all direct impacts of the transmission line may be adverse. Recent research shows that raptors and corvids may benefit from the presence of transmission lines because they may provide more roosting or nesting opportunities (Steenhof et al., 1993). This study also found that nest success for golden eagles was higher (10 percent) for nests on transmission lines than for nests in cliffs. Conversely, the increased perching opportunities for raptors are a known threat to greater sage-grouse. Raptors that prey on greater sage-grouse would have additional perching locations, which may increase their predation on sage-grouse.

Introduction of a new transmission line throughout the valley may increase perching opportunities for raptors, owls, and other avian predators. These avian species may increase the predation pressures on vulnerable species, such as other bird species or bat species in the area.

4.3.2.3 Process Ponds

Direct effects may include bird or bat injury or mortality during operation because of the presence of process ponds associated with the facility, as discussed in Section 4.2.

4.3.2.4 Ancillary Facilities

The operation of the ancillary facilities in the project area would have minimal impacts to avian and bat species. The primary impact for the operations of these areas would be from an increase of personnel and vehicles in the area. Noise and human disturbance would have a temporary impact on migratory birds and would displace them to areas outside the active mining area. The intensity of these impacts would vary from species to species but the impacts from project operations are anticipated to be long-term, lasting the life of the project.

5.0 CORPORATE POLICY

Midway and Mt. Wheeler Power would voluntarily adopt and implement the avian and bat protection measures as described in this BBCS to reduce the potential for mortality that could result from the project.

5.1 TRAINING

In order to effectively implement the BBCS, Midway would ensure that all appropriate personnel (Facilities Maintenance Department, Resident Officer in Charge of Construction, etc.) undergo training on the issues and protocols outlined in the BBCS. This training would ensure that all appropriate personnel have a thorough understanding of the BBCS and their responsibility to avian and bat protection and regulatory compliance.

5.2 PERMIT COMPLIANCE

There may be situations where Midway or Mt. Wheeler Power find it necessary to obtain additional federal and state permits regarding avian or bat species as it relates to mortality and to avian nest removal and relocation. These could include incidental take permits, collection or salvage permits, and nest removal and relocation permits. In such a situation, Midway would work with the federal and state resource agencies listed in Section 9.0, to determine which permits are necessary and to acquire relevant permit applications. Under no circumstances would Midway or Mt. Wheeler Power perform any activity requiring a permit without first obtaining the proper permit or authorization to do so.

6.0 IMPLEMENTATION AND ADAPTIVE MANAGEMENT ACTIONS

It is primarily Midway's responsibility to follow the methodology outlined below. However, Mt. Wheeler Power would also follow the methodology outlined below during power line inspection and maintenance procedures.

6.1 AVIAN AND BAT REPORTING SYSTEM

6.1.1 Purpose of the Avian and Bat Reporting System

In order to assess the effectiveness of the BBCS and prioritize avian and bat protection needs, Midway would report, monitor, and manage all bat and avian injury or mortality in accordance with the methodology below. All appropriate Midway personnel, including managers, supervisors, line crews, and engineers would be provided with instruction on implementing the methodology and properly reporting bat and avian mortality. The reporting of avian and bat mortality would be standard practice by Midway for the duration of the operation of the project. Reporting of avian nesting sites would also be performed according to the methodology below.

6.1.2 Avian Reporting System Components

6.1.2.1 Detection

Avian and bat injury or mortality would be detected through investigation of avian- or bat-caused power outages, through monitoring efforts during operation, and through incidental observations by Midway personnel or others. To improve the probability that birds or bats that have suffered injury or death do not go undetected, Midway field staff would be directed to remain alert for birds and bats within the project area and near the project area. The detection of avian nest sites would occur through monitoring efforts during operation and through incidental observations.

6.1.2.2 Response and Documentation to Injured, Deceased, and Nesting Birds

In the event that an avian or bat injury or mortality is detected through monitoring efforts or incidental observations, Midway personnel would record the circumstances and conditions associated with the death or injury. Among the information recorded would include photographs and the date and time that the bird or bat was detected, the location where the bird or bat was detected (in NAD 83, UTMs), the apparent cause of injury or mortality, and if possible, the species of the bird or bat. The animal would be collected and kept in a freezer until positive identification and cause of death is determined. Midway personnel would be provided with a standardized Quarterly Wildlife Mortality Report Form for recording the necessary information when an incident is detected. An example form is provided in Appendix B. This information is compiled quarterly and submitted to NDOW as required by the existing Industrial Artificial Pond Permit held by Midway.

For reporting incidents by Mt. Wheeler Power, coordination with Midway environmental staff, USFWS, and obligatory reporting through the USFWS on-line reporting or other acceptable reporting system (see Section 9.0) would be sufficient.

Midway would perform a site assessment in response to any power outage that may occur in order to determine the cause and circumstances resulting in the outage. If it is determined that the power outage is related to avian interaction with the utility system, Midway would record the pertinent avian information using the standardized Avian Incident Form (Appendix B). Assuming the bird causing the outage suffers mortality from the incident, the information recorded would include the species of the bird, the nearest power pole number if applicable, the specific cause of the fatality if possible, and as much other relevant data as possible. Photographs of the bird carcass would be taken to accompany the standard reporting form if possible. It is unlikely that bat species would be capable of causing a power outage due to the spacing of the lines and the size of these smaller sized mammals.

In the event that an avian nesting site is observed through monitoring or incidental observations within the project area, Midway personnel would record the circumstances and conditions associated with the nest site and nest. The recorded information would be used to determine if the nest and its locations present risk of injury or mortality to the nesting birds, and if the nest presents risk to the functionality of the solar project.

6.1.2.3 Remedial Action

While there are no legal provisions for an unauthorized take of protected species, the USFWS recognizes that some avian species may be killed even after all reasonable measures to avoid a take are implemented. Based upon the information gathered from site investigations and reported on Avian Incident Forms, USFWS, BLM, NDOW, and Midway would determine whether implementation of remedial protection measures is substantiated. This determination would be dependent on the frequency of incident occurrences at a particular facility, the species that suffered mortality, the likely effectiveness of remedial actions, and agency input and guidance. Likewise, these same factors would determine what types of remedial protection measures and practices Midway would implement if such measures are determined necessary.

6.1.3 Reporting

Midway's Environmental Representative would complete and submit a Quarterly Wildlife Mortality Report Form (Appendix B) to NDOW every quarter in accordance with NDOW's Industrial Artificial Pond Permit. Although this form would be for NDOW submittal, it could be used for other mortality monitoring studies, if required, at the site and would be available to regulatory agencies should data be requested. Midway's Environmental Representative would also complete the USFWS's online "Bird Fatality/Injury Report", an online database of

voluntarily submitted incidents of bird mortalities and injuries resulting from electrocutions or collisions with utility structures, or other reporting method as directed by the USFWS. The intent of the database is to gain information that can be used to prevent future avian mortality.

Mortality of a bald eagle or golden eagle would be immediately reported to the USFWS, BLM, and NDOW. Any other avian nesting or avian and bat mortality data reported in the area by persons not employed by Midway would be recorded by Midway in the USFWS online database, or other method as directed by the USFWS.

6.1.4 Disposal Procedures for Injured, Deceased, and Nesting Birds

The USFWS issues permits to take, possess, or transport bald and golden eagles under the BGEPA. Considering that mortality of a golden or bald eagle is unlikely to result from the project, especially after implementation of the mitigation measures described in this BBCS, the need for a take permit under the BGEPA is not warranted at this time. Midway personnel are strictly prohibited from handling, transporting, or disposing of a golden or bald eagle carcass without a permit issued under the BGEPA. As a result, in the unlikely event that such mortality does occur, Midway would contact the USFWS and NDOW immediately to report the incident and arrange for retrieval and receipt of the carcass. The BLM would also be notified of the mortality. In the event that an eagle mortality occurs, Midway would conduct a Resource Equivalency Analysis and meet with the agencies to determine appropriate compensatory mitigation and to determine if further avoidance measures should be implemented.

Under the MBTA, it is unlawful to collect, salvage, or otherwise have in possession any raptor or raptor part, including feathers, without a state and federal permit. Most other avian species with potential to occur in the project area, including those that are not raptors, would be protected under the MBTA as well. There may be occasion however, for Midway or appointed biologists to collect bird carcasses in order to determine the cause of death, for disposal purposes, for temporary collection for onsite inspection, or for extraction from electrical components. If such occasion becomes necessary, Midway would coordinate with the USFWS, BLM, and NDOW to determine the need for a permit and, if necessary, would apply for permits to allow the handling of dead and injured birds. Midway would immediately notify USFWS and NDOW regarding any apparent injury or death occurring to an eagle during project activities. Midway would ensure that any injured eagle would be immediately transported to the nearest federally permitted eagle rehabilitator. Dead eagles would be reported to the USFWS Division of Migratory Bird Management and Law Enforcement within 48 hours and shipped to the eagle repository in Colorado. A Migratory Bird Salvage permit maybe required. Programmatic Eagle Permits are available and would be discussed in detail in the Eagle Conservation Plan for this project. An incidental take permit as well as potentially a nest permit may be required for this project. The

salvage and shipment of eagles would be included in the permit and could be handled by Midway or appointed biologists.

The USFWS has online "Bird Fatality/Injury Report" (https://birdreport.fws.gov/) for incidents related to electrical systems.

Some of the bat species with potential to occur in the project area are considered BLM sensitive species in the state of Nevada. Several of the species are also classified as protected by the State of Nevada. In the event that a bat sustains injury or experiences death from interaction with facilities, Midway or Midway appointed biologists may need to handle, transport, or dispose of bat carcasses. If the need for such actions becomes apparent, Midway would coordinate with the BLM and NDOW to ensure that if any permits are necessary they are obtained and that all activities are in accordance with applicable regulations and laws.

6.2 MORTALITY REDUCTION MEASURES

6.2.1 Avoidance and Minimization

Midway has agreed to several measures to avoid and minimize impacts to avian and bat species during project construction and operation that are discussed in Section 2.3.

In order to minimize impacts to migratory birds during initial construction activities, Midway would avoid land-clearing activities such as vegetation removal during the avian breeding season (March 15 to August 31). Midway would conduct nesting surveys for migratory birds if disturbance needs to occur between April 1 and July 31, within seven days of disturbance. In coordination with the BLM, an avoidance buffer would be determined and the nest would be avoided to prevent destruction or disturbance until the birds are no longer present.

During project operations, vehicles would travel on project roads to minimize destruction of the native habitat in the project area, which would minimize habitat impacts and crushing of avian and bat species during project-related activities.

Pre-construction clearance surveys for western burrowing owl would occur prior to any surface disturbance occurring from March 15 through August 31. If occupied western burrowing owl nesting territories are encountered, Midway would avoid the area within 0.25 miles of the active territory until a qualified biologist has determined the young have fledged and the nesting territory has been abandoned for the season. If disturbance of these areas is determined to be unavoidable, consultation with the appropriate BLM and NDOW wildlife biologists would occur to develop mitigation techniques.

6.2.2 Assessment and Implementation Approaches

6.2.2.1 Reactive Approach

The reactive approach would include implementation of adaptive management actions after avian or bat mortality has occurred. As incidents occur, Midway would respond appropriately through documentation via the Avian Reporting System (Section 8.0). The post-construction monitoring procedures described in Section 9.0 would also report and record mortality impacts resulting among avian and bat species interacting with the project facilities. These reports would be provided to USFWS, NDOW, and BLM. The reported mortality impacts would be assessed by the three agencies in collaboration with Midway to determine whether the impact justifies mitigation by implementation of adaptive management actions. This determination would include several factors such as the avian or bat species impacted, whether that species is listed as threatened or endangered, the rarity of the species, the effects on the population level of that species, and consideration of previous mortality resulting to that species at the project site, or as a result of interaction with that project facility. Adaptive management actions would be developed based on many of these same factors. The development of specific adaptive management actions would occur collaboratively among the USFWS, NDOW, BLM, and Midway, and would be based on scientific data, effective actions implemented at similar projects, new technology developed during the life of the project, and other similar or related information. Continued post-construction monitoring at the process ponds would reveal if these adaptive management techniques have been successful in minimizing mortality as intended. The success of the techniques shall be determined collaboratively as well.

Not all impacts would warrant implementation of adaptive management techniques, such as reducing avian mortality at the process ponds by implementing various avian deterrent devices at the ponds according to species and seasons. Although the mortality of a bat or bird or several bats and birds would occur for a reactive measure to be implemented, the population benefits through minimization or removal of the risk originally causing the mortality.

6.2.2.2 Preventative Approach

Preventative measures would include all of the initial protection measures described in this document that would be constructed into the project components in order to minimize mortality, such as placement of bird discs on the surface of the process ponds or raptor-safe power poles and transmission lines. Preventative measures attempt to avert potential bat and avian mortality before the potential becomes reality. Effective preventative measures can help prevent possible violations of the MBTA, ESA and BGEPA.

Preventative measures also include mitigation measures implemented to minimize or eliminate the potential for avian mortality resulting from non-operational risks associated with the project,

such as construction impacts. Appendix C contains several of the mitigation measures that Midway would implement for non-operational impacts.

6.3 AVIAN ENHANCEMENT OPTIONS

Midway would continue to protect natural resources and promote actions that benefit local and regional bird and bat populations. Midway would limit project disturbance to the area within the perimeter fence to the extent possible thus, maintaining local vegetation outside of the project perimeter fence that would maintain nearby nesting and foraging habitat for avian and bat species. Midway would avoid construction of new roads, and if necessary, new roads outside of the perimeter fence would be kept to a minimum.

In addition to enhancing habitat, Midway would install anti-perching guards on power poles outside of the project fence perimeter. Anti-perching guards reduce or inhibit perching by predatory birds leading to the overall safety of the immediate wildlife habitat. Based on agency consultation and approval, nesting platforms or nesting boxes could be constructed by Midway at a future date. Such construction would depend on future observations and monitoring data during operation of the facility, and would be coordinated with USFWS, BLM, and NDOW.

6.4 MORTALITY AND MONITORING STUDIES AND MITIGATION

6.4.1 Goals and Objectives

The primary goal of the post-construction monitoring program is to ensure that the adaptive management approach is as successful as possible at minimizing the potential for avian and bat mortality sustained from interactions with the project components during operations. In order to accomplish this goal, it is critical that an estimate of the impacts of the project facility to avian and bat species is obtained regularly. This would ensure that the adaptive management actions that have been implemented are routinely assessed for effectiveness and that avian and bat mortality remain minimized. To facilitate this, the objective of the post-construction monitoring program is to:

- Estimate direct impacts to birds and bats in terms of mortality resulting from operation of the project facilities; and
- Estimate the success of adaptive management actions that have been implemented to minimize avian and bat mortality and, if necessary, identify other actions to implement.

Midway would consider refinement of monitoring methods and mitigation practices described below and adoption of new survey techniques or protocols as they become available. Refinement of the monitoring program may also occur through consultation with the USFWS, BLM, and/or NDOW. The monitoring program may be adjusted to include additional objectives as determined necessary during implementation and practice, or through consultation with USFWS, BLM, and/or NDOW.

6.4.2 Post-Construction Monitoring Components

Monitoring of the project components would focus on the constructed transmission lines and process ponds.

6.4.2.1 Methods

Transmission Lines

Should monitoring be required through consultation with USFWS and/or NDOW, the intensity of the monitoring program would be determined as well as the locations of the monitoring efforts would be determined prior to construction of the transmission line.

Process Ponds

Daily inspection of the process facilities where permitted solutions are located would be conducted on a daily basis. All avian or bat mortalities found would be reported to Midway's Environmental Representative within 24 hours. This information would be reported quarterly to NDOW via the quarterly mortality report form.

6.4.2.2 Monitoring Golden Eagle Nest Territories

Monitoring a golden eagle nesting territory would follow the survey methodology and protocols outlined in the USFWS Interim Golden Eagle Technical Guidance and Protocols (Pagel et al., 2010) for ground surveys or other methodology acceptable to USFWS, BLM, and/or NDOW. This survey protocol is intended to standardize procedures to identify occupied areas and inventory and monitor golden eagles within the direct and indirect impact areas of planned or ongoing projects where disturbance may cause take. Additionally, the protocols intend to minimize potential observer related disturbance to golden eagles by requiring that surveys are conducted by experienced biologists.

Monitoring shall include all golden eagle nests within the mine permit boundary and within one mile of the boundary or as directed by the USFWS. Monitoring would continue for at least five years after project construction. The length of time is intended to capture whether the mine may be impacting nesting golden eagles.

Goals and Objectives:

- Record and report occupancy and productivity of local golden eagle territories;
- Determine nesting chronology;
- Evaluate whether and which activities or conditions may be affecting golden eagles; and
- Determine if the nesting territory within the project area becomes abandoned.

At least two surveys would be conducted during the year along all suitable nesting habitat for golden eagles within a visual sight-line of the project following protocols outlined by Pagel et al.

(2010). During breeding season, at least two surveys would be conducted to capture behaviors such as courtship, nest building, incubating, nesting period, and fledging. The first survey would be conducted in March and the second survey in May. Scheduling the surveys at these times would bracket the typical nesting period and provide information on the nesting success of golden eagles and other raptors in and around the project area. Additional surveys may be conducted if necessary. Observation points should be established to offer an unobstructed view of the nest locations and surrounding habitat. Observations should last at least four hours per site and observations of behavior should be documented. All birds that are observed would be documented, especially those of other raptor species, particularly if nests are occupied or if courtship, territorial, or similar behavior is noted.

Surveys should commence during the first two weeks of March and should end by mid-May, unless unusual seasonal variation disrupts the breeding season. Surveys should be conducted prior to construction of the projects through the life of the project or as required by USFWS. If after three years of monitoring, no activity is observed at a nest site, it would be considered inactive and only monitored every other year after that. All documented nests within one-mile of the mine and within line-of-sight would be monitored annually as outlined above during the first five years of project implementation or as required through consultation with USFWS.

Annual reports would be compiled and submitted to USFWS, BLM, and/or NDOW. The reports would include methodology, dates and times of nest territory monitoring, species encountered, other raptor behavior observed, observed use of or behavior around project components, golden eagle nesting behavior (courtship, nest building, incubating, feeding, etc.), and any observed nestling and/or fledgling. After the first year report, all subsequent reports would have the previous years' summaries included.

6.4.3 Mitigation and Adaptive Management

Specific mitigation measures for impacts to avian and bat species from the project have not been specified; however, USFWS would contribute to accessing site-specific mitigation.

Over the course of operation and maintenance of the project, Midway's Environmental Department would gather, review, and report the monitoring data from site investigations and any mortality reports resulting from structures that are observed creating avian mortality issues. The information received from the monitoring data would be used to prioritize, in collaboration with the agencies, future changes in monitoring and addressing potentially problematic areas and/or structures. Midway understands that ensuring the protection of avian species along this project from year-to-year would be a dynamic process that may require different techniques and approaches to reduce avian mortality. Close coordination with the agencies would be important in managing and adapting this plan to future conditions.

7.0 QUALITY CONTROL

Periodically, Midway would assess various parameters and protection measures as described in the current BBCS to ensure that it is as efficient and effective as possible. Parameters that Midway would assess periodically include:

- Assessing remedial action techniques through follow-up surveys to evaluate their effectiveness in reducing avian and bat mortality;
- Assessing avian and bat protection devices to identify products preferred for avian and bat protection as well as ease of application and durability;
- Assessing mortality reporting procedures to ensure that discoveries of avian mortalities are properly documented;
- Assessing compliance with company procedures to ensure that personnel are consistently following company methods for avian- and bat-safe construction, mortality reporting, nest management, etc.; and
- Assessing public and agency opinions on system reliability and avian protection.

These parameters would be assessed during each periodic review of the BBCS if necessary or if appropriate for that period. Additional parameters other than those listed above may be assessed during review of the BBCS if determined necessary by Midway. Although it is only practical to periodically revise or update the BBCS, the quality control component would be an ongoing process. Daily observations, internal operating procedures, personnel input, and new technologies would be applied to assessments during the periodic reviews of the BBCS. Revisions and updates to the BBCS would be made in consultation with USFWS, BLM, and NDOW. Revisions and updates to the BBCS would be addressed with personnel at the project area.

8.0 PUBLIC AWARENESS

A public awareness program can be an integral part of a BBCS. This program can be used to enhance general public awareness and support for a project's BBCS. It allows stakeholders such as government agencies, Tribes, non-profit organizations, wildlife rehabilitators, and other interested parties an opportunity to provide input to the decision-making process, enabling all parties to work openly and collaboratively toward recommendations that can be effectively implemented. This collaboration often leads to improved relationships within the community and to more efficient and positive projects. The relationships developed through this process may also encourage the public to report bird and bat mortalities and encourage them to seek assistance for birds and bats that have been injured in power line related accidents (APLIC and USFWS, 2005).

Midway would include avian and bat protection in its ongoing public awareness campaign. Ongoing public awareness would include Midway's cooperative and innovative efforts to minimize avian and bat mortality, effectiveness of the BBCS, and ongoing monitoring to detect problem areas. Public awareness may be made available through brochures, websites, advertisements, or other media.

9.0 KEY RESOURCES

Midway would consult with the following key resources to assist in providing expertise in permitting, bird and bat populations and behavior, and avian- and bat-safe design features.

- United States Fish and Wildlife Service
  Division of Migratory Birds: http://www.fws.gov/migratorybirds/ContactUs.htm.
  Contacts: http://www.fws.gov/migratorybirds/ContactUs.html

  Bird Fatality/Injury Reporting Program – For Use by Electric Utility Industry
  https://birdreport.fws.gov/

  Migratory Bird Permits, 50CFR21
  http://access.gpo.gov/nara/cfr/waisidx_03/50cfr21_03.html
  Eagle Permits, 50CFR22
  http://access.gpo.gov/nara/cfr/waisidx_03/50cfr22_03.html

  Depredation Permit:
  This permit would authorize Allied Nevada to remove and destroy a limited number of active nests when built on power line structures and substations or other areas that are an imminent fire or other hazard. This permit may also require removal of nests to be conducted outside the nesting season. Permit application and requirements can be found here: http://www.fws.gov/forms/3-200-13.pdf

  Special Purpose Permit:
  This permit is available for emergency removal of nests from transmission or distribution systems or other facilities to prevent electrocution or other eminent mortality hazard. These permits are limited and allow the removal and relocation of active nests (with eggs or young); allows for recovery of sick or injured migratory birds and the transportation of those birds to a wildlife rehabilitation facility holding federal and state permits. Specific to this permit are handling instructions for eagles and federally listed species.

  Contact:

  REGION 8
  U.S. Fish and Wildlife Service California, Nevada
  Migratory Bird Permit Office
  2800 Cottage Way
  Sacramento, CA 95825

  Tel. (916) 414-6464
  Fax (916) 414-6486
  Email *permitsR8MB@fws.gov*

- Nevada Department of Wildlife
  Eastern Region Mining Biologist, Elko: (775) 777-2300
  Quarterly Wildlife Mortality Reporting Form:
  http://www.ndow.org/uploadedFiles/ndoworg/Content/public_documents/Forms_and_Resources/Special_Permits/Blankmortform.pdf

  NDOW-Scientific Collection Permit:
  This permit allows for removal of inactive nests from project facilities to prevent outages or hazards (excludes nests of eagles and endangered species); allows for removal or relocation of active nests that could be affected by construction, reconstruction, modifications, or maintenance activities- on a case-by-case basis; pick up sick or injured birds and other non-listed wildlife species and transport to rehabilitation facilities holding state and federal permits; salvage dead birds and other non-listed wildlife species; eagles and endangered species must be delivered/received by the USFWS.

  Application and instructions can be found here:
  http://www.ndow.org/uploadedFiles/ndoworg/Content/public_documents/Forms_and_Resources/Special_Permits/Instructions%20-%20Scientific%20Collection-Possession-Banding%20Permit.pdf

- Bureau of Land Management
  Ely District Office, Egan Field Office, BLM Biologist: Marion Lichtler (775) 289-1819

- Great Basin Bird Observatory
  http://www.gbbo.org/about_contact.html

- Western Bat Working Group
  http://www.wbwg.org/

- Avian Power Line Interaction Committee
  http://www.aplic.org/mission.php

These resources would be utilized as necessary and would further ensure that Midway has a successful and effective BBCS. Resources other than those listed may also be consulted, including consultants, company specialists, and other mining facilities with proven effective avian and bat protection programs.

10.0 LITERATURE CITED

Avian Power Line Interaction Committee (APLIC). 2006. *Suggested practices for avian protection on power lines: The state of the art in 2006*. Washington, D.C. and Sacramento, CA: Edison Electric Institute, Avian Power Line Interaction Committee, and California Energy Commission.

Avian Power Line Interaction Committee (APLIC). 2012. *Reducing Avian Collisions with Power Lines: The State of the Art in 2012*. Edison Electric Institute and APLIC. Washington, D.C.

Avian Power Line Interaction Committee (APLIC) and United States Fish and Wildlife Service (USFWS). 2005. *Avian protection plan (APP) guidelines, A joint document prepared by The Edison Electric Institute's Avian Power Line Interaction Committee (APLIC) and U.S. Fish and Wildlife Service (USFWS), April 2005*. Available from http://www.aplic.org/resources.htm

Bureau of Land Management (BLM). 2007. Ely Proposed Resource Management Plan and Final Environmental Impact Statement. November 2007.

Bureau of Land Management (BLM). 2008. Manual 6840, Special status species management. Washington, D.C.: Bureau of Land Management.

Bureau of Land Management (BLM). 2013a. Mitigation Plan for the Pan Mine Project. Bureau of Land Management, Ely District Office.

Bureau of Land Management (BLM). 2013b. Draft Environmental Impact Statement For the Pan Mine Project. Case File NVN-090444. Bureau of Land Management, Ely District Office.

Connelly, John W., Schroeder, Michael A., Sands, Alan R., and Braun, Clait E. 2000. Guidelines to Manage Sage Grouse Populations and their Habitats. Wildlife Society Bulletin 2000, 28(4): 967-985. Accessed on July 30, 2012 online at: http://sagemap.wr.usgs.gov/

Cornell Lab of Ornithology (Cornell). 2013. Keeping Birds Safe Around Windows. Accessed on April 17, 2013 online at: http://www.allaboutbirds.org/Page.aspx?pid=1184

Great Basin Ecology, Inc. (GBE). 2013. American Vanadium Corp. Gibellini Project Golden Eagle Surveys. April and June 2013. Raw point data.

Harness, R., S. Milodragovich, and J. Schomburg. 2003. Raptors and power line collisions. Colorado Birds 37: 118-122

Henny, C. J., R. J. Hallock, and E. F. Hill. 1994. Cyanide and migratory birds at gold mines in Nevada, USA. *Exotoxicology*, 3, 45-58.

JBR Environmental Consultants, Inc (JBR). 2012a. *2011 Vegetation Baseline Survey Report, Pan Project, White Pine County, Nevada*. Prepared for Midway Gold Corp. JBR Environmental Consultants, Elko, Nevada. JBR Project Number B.A11278.00, JBR Report Number 1051 Final. January 17, 2012.

JBR Environmental Consultants, Inc (JBR). 2012b. *2011 Wildlife Baseline Survey Report, Pan Project, White Pine County, Nevada*. Prepared for Midway Gold Corp. JBR Environmental Consultants, Elko, Nevada. JBR Project Number B.A11278.00, JBR Report Number 1057 Final. April 18, 2012.

JBR Environmental Consultants, Inc (JBR). 2012c. *2012 Raptor Nest Survey Alternative Transmission Line Route Pan Project, White Pine County and Eureka Counties, Nevada*. Prepared for Midway Gold U.S. Inc. JBR Environmental Consultants, Inc., Elko, Nevada. JBR Project Number B.A12344.00, JBR Report Number 1100. October 8, 2012.

JBR Environmental Consultants, Inc (JBR). 2013. *2013 Golden Eagle Nesting Survey, Pan Mine Project, White Pine County, Nevada*. Prepared for Midway Gold Corp. JBR Environmental Consultants, Inc., Reno, Nevada. JBR Project Number B.A13124.00. September 10, 2013.

J.C. Brennan & Associates, Inc. 2013. Baseline Noise Assessment for the Midway Gold Pan Mine Project. May 29, 2013.

Lebbin, D.J., M.G. Harvey, T.C. Lenz, M.J. Andersen, and J.M. Ellis. 2007. Nocturnal migrants foraging at night by artificial light. *The Wilson Journal of Ornithology*, 199(3), 506-508.

Lyon A.G., and S.H. Anderson. 2003. Potential gas development impacts on sage-grouse nest initiation and movement. *Wildlife Society Bulletin* 31:486–491.

Manville II, Albert M. 2005. Bird strike and electrocutions at power lines, communication towers, and wind turbines: state of the art and state of the science - next steps toward mitigation. In *U.S. Department of Agriculture, Forest Service, General Technical Report PSW-GTR-191* (pp. 1051 – 1064). Albany, CA: U.S. Department of Agriculture, Forest Service, Pacific Southwest Research Station.

Midway Gold Corporation (Midway). 2012. Pan Mine Plan of Operations and Reclamation Permit Application (BLM Case File Number NVN-078305) (Permit No. 0228). Revised May 2012.

Mt. Wheeler Power (MWP). 2012. Mt. Wheeler Power, Inc. Highway 50 to Pan 69 KV Transmission Line Project White Pine County, Nevada, Plan of Development. October 2012.

Natural Resources Conservation Service (NRCS). 2006. Profile for the Greater Sage-grouse. February 2006. http://www.plant-materials.nrcs.usda.gov

Nevada Department of Wildlife (NDOW). 2012. Nevada Department of Wildlife Management Units [Map]. 1in=25miles. Accessed July 19, 2012 online at: http://www.ndow.org/hunt/maps/unitmap.shtm

O'Shea, T.J., D.R. Clark, Jr., and T.P. Boyle. 2000. Impacts of mine-related contaminants on bats. In: Voories, K.C., and D. Throgmorton (eds.). Proceedings of bat conservation and mining: a technical interactive forum, November 14-16, 2000, St. Louis, Missouri. Alton, IL; Carbondale, IL: U.S. Department of Interior, Office of Surface Mining and Coal Research Center, Southern Illinois University. p. 276-292.

Pagel, J.E., D.E. Whittington, and G.T. Allen. 2010. *Interim golden eagle inventory and monitoring protocols; and other recommendations*. Arlington, VA: Division of Migratory Birds, U.S. Fish and Wildlife Service.

Podborny, Mike. 2012. Game Biologist, Nevada Department of Wildlife. Personal communication with Josh Vittori, Biologist for JBR Environmental Consultants, Inc., Reno, Nevada office. July 6, 2012.

Steenhof, K., M. N. Kochert, and J.A. Roppe. 1993. Nesting by raptors and common ravens on electrical transmission line towers. *Journal of Wildlife Management* 57:272-281.

United States Fish and Wildlife Service (USFWS). 1998. *Endangered Species Act Section 7 Consultation Handbook*. Available online at: http://www.fws.gov/endangered/esa-library/index.html#consultations

United States Fish and Wildlife Service, Division of Migratory Birds (USFWS). 2000. Service Interim Guidelines for Recommendations on Communications Tower Siting, Construction, Operation, and Decommissioning. Accessed on September 27, 2010 online at: http://www.fws.gov/migratorybirds/CurrentBirdIssues/Hazards/towers/comtow.html

United States Fish and Wildlife Service (USFWS). 2008. United States Fish and Wildlife Service, Migratory Bird Management Program, program overview. Accessed on September 16, 2010 online at: http://www.fws.gov/migratorybirds/NewReportsPublications/FactSheets/MBM%20Fact20Sheet.pdf

FIGURES

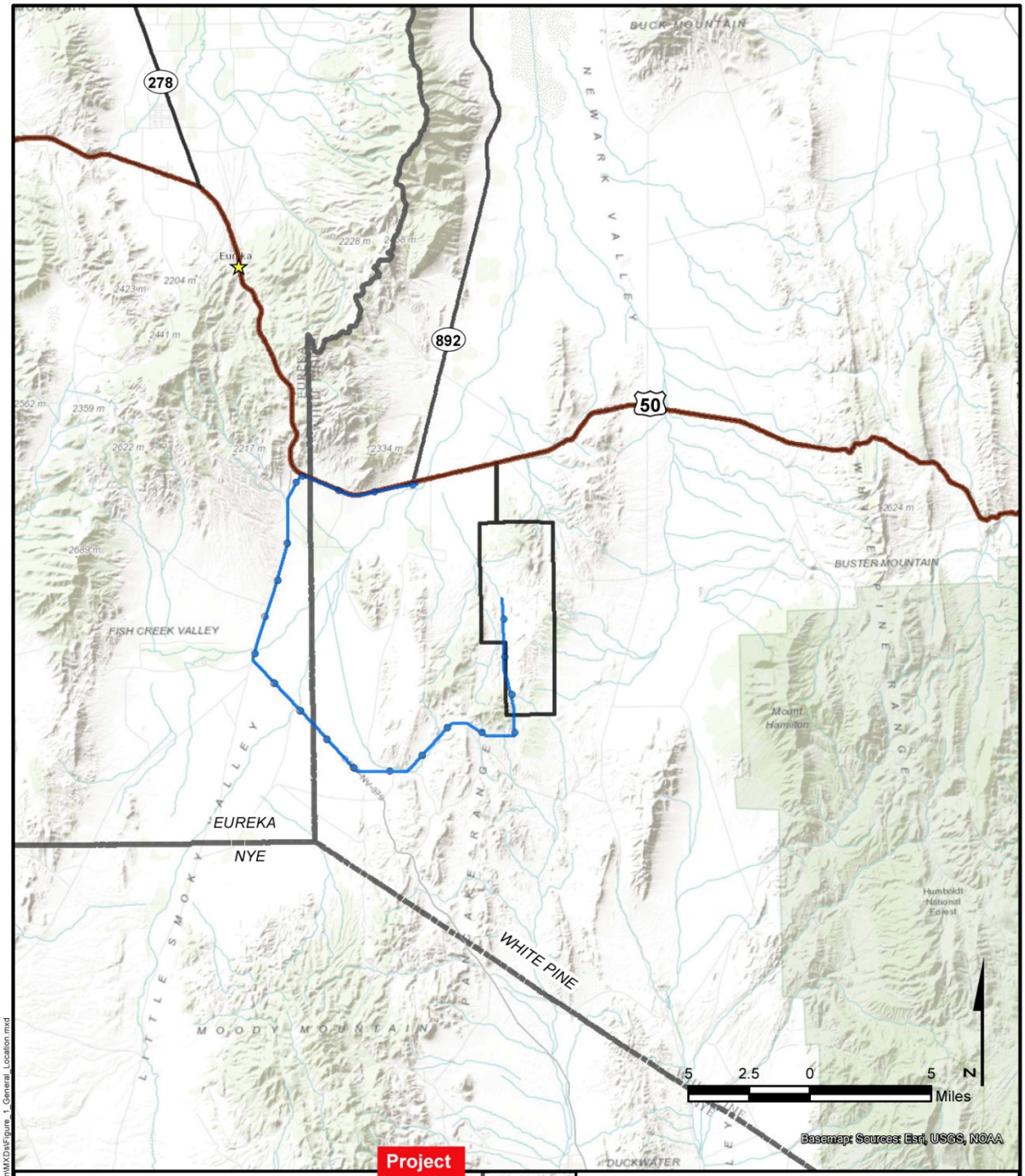

Project Area

Southwest Power Line

MIDWAY GOLD
PAN MINE BIRD AND BAT
CONSERVATION STRATEGY

FIGURE 1
PROJECT LOCATION

JBR

DRAWN BY CHJ	DATE DRAWN 10/23/2013
SCALE 1 in = 6 miles	
PROJECT B.A12051.00	

X:\N\Clients\MidwayGold\Pan_Avian_Protection_Plan\MXD\s\Figure_1_General_Location.mxd

This document is for reference purposes only and should not be used as a legal document. JBR makes no guarantees to the accuracy of the data contained herein or any loss resulting therefrom.

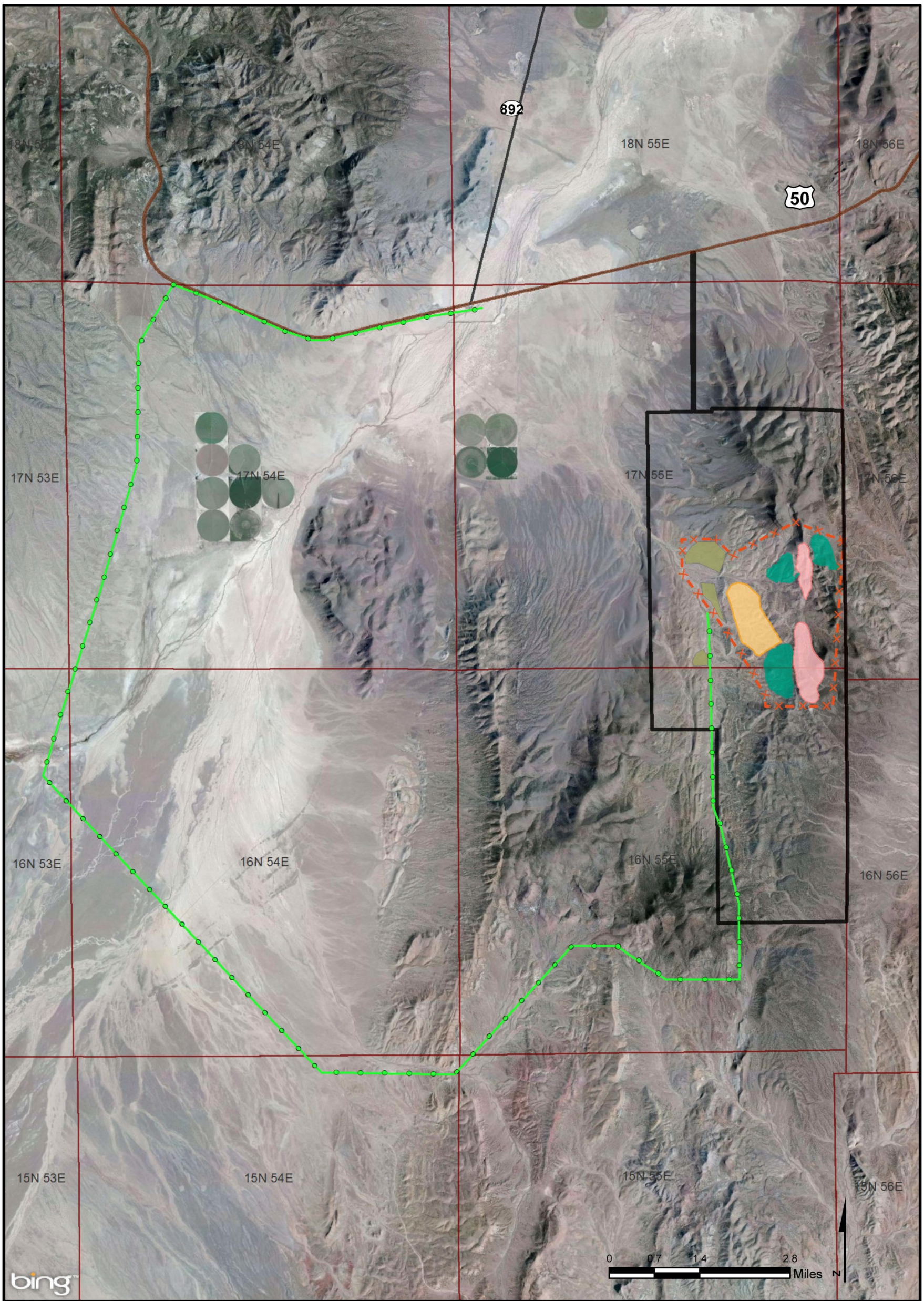

Southwest Power Line

Fence

Project Area

Heap Leach Pad

Pit

Borrow Area

WRDA Alternative

MIDWAY GOLD
PAN MINE BIRD AND BAT
CONSERVATION STRATEGY

FIGURE 2
PROPOSED FACILITIES

JBR

DRAWN BY CHJ	DATE DRAWN 10/22/2013
SCALE 1 in = 1.4 miles	
PROJECT B.A12051.00	

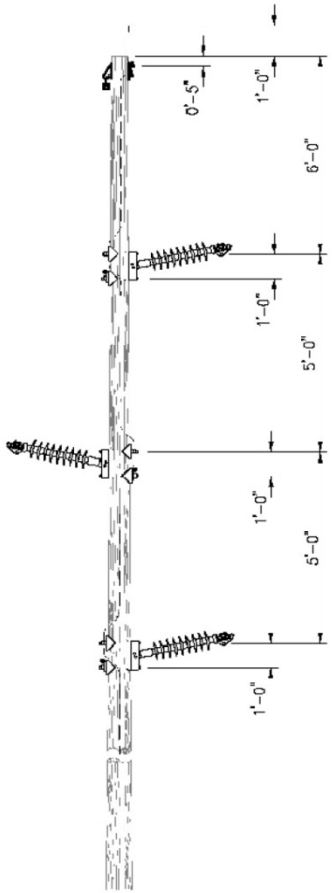

Single Circuit Tangent Structure

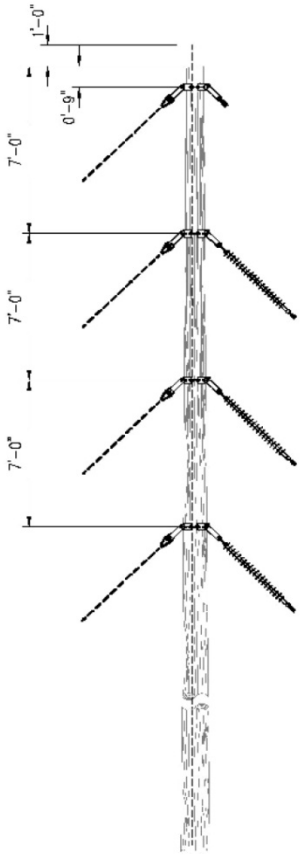

Single Circuit Running Angle Structure

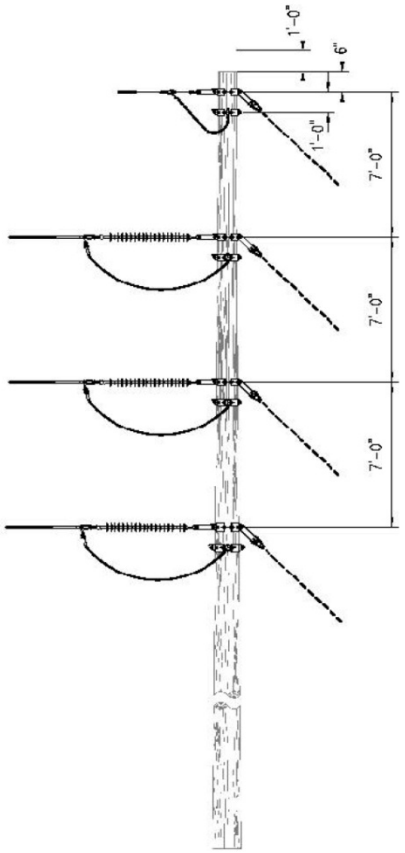

Single Circuit Dead Structure

Drawing Source	Plan of Operations
Drawn By	SRK Consultants
Date Drawn	October 2011

MIDWAY GOLD
PAN MINE BIRD AND BAT
CONSERVATION STRATEGY

FIGURE 3
TRANSMISSION LINE STRUCTURES

JBR

DRAWN BY	CHJ	DATE DRAWN	
SCALE	Not To Scale		
PROJECT	B.A12051.00		

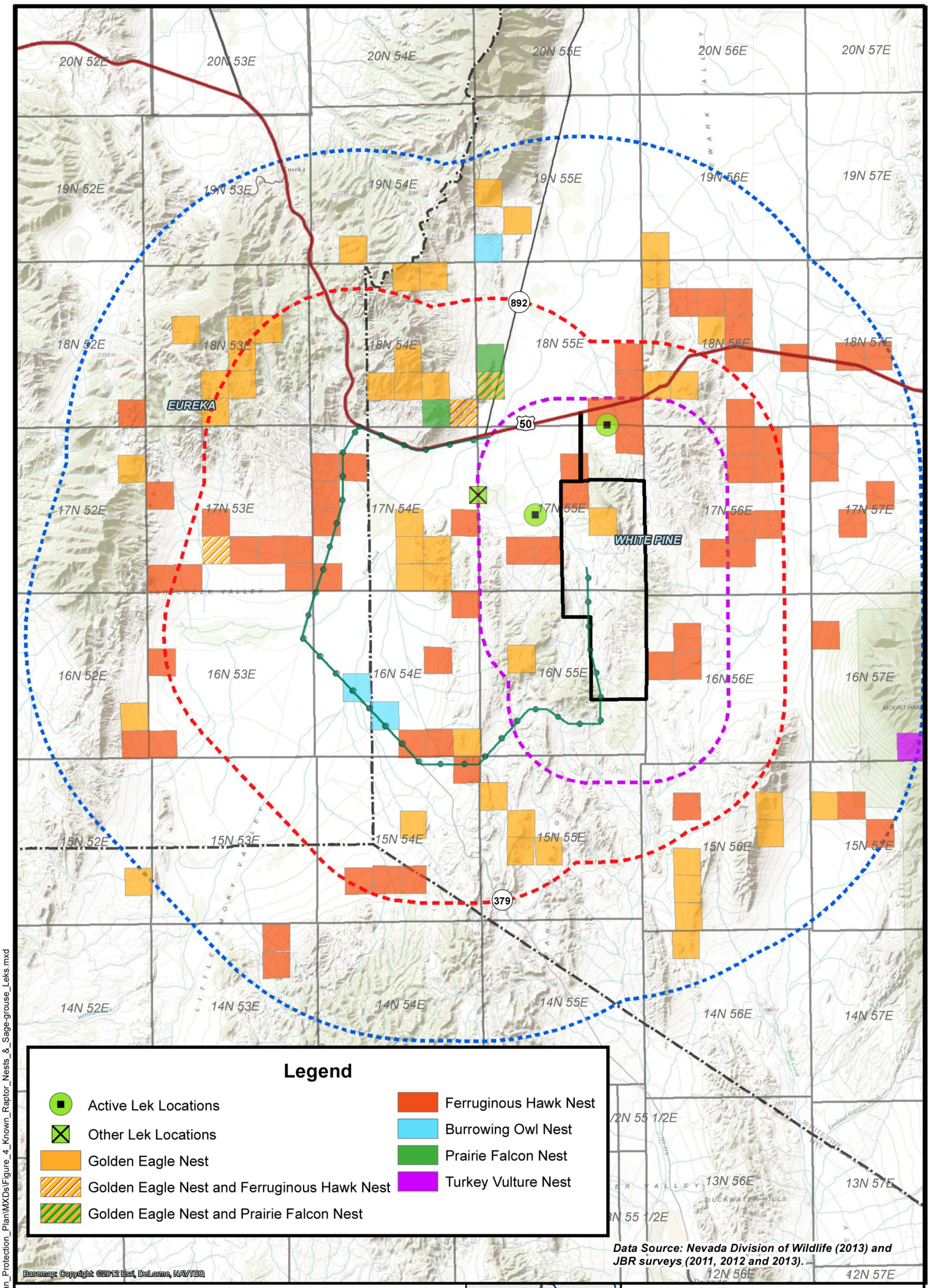

Project

3-Mile Sage-Grouse Buffer

5-Mile Raptor Buffer

10-Mile Raptor Buffer

Southwest Power Line Alternative

3 1.5 0 3 Miles

N

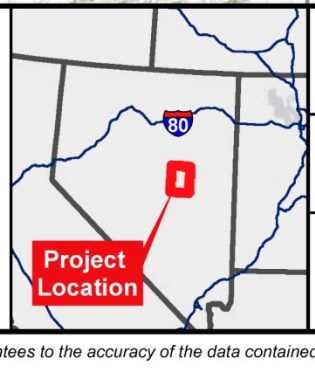

MIDWAY GOLD
PAN MINE BIRD AND BAT
CONSERVATION STRATEGY

FIGURE 4
KNOWN LOCATIONS OF RAPTOR NESTS
AND SAGE-GROUSE LEKS

JBR

DRAWN BY CHJ	DATE DRAWN 10/18/2013
SCALE 1 in = 3 miles	
PROJECT B.A12051.00	

Path: X:\NV\Clients\MidwayGold\Pan_Avian_Protection_Plan\MXDs\Figure_4_Known_Raptor_Nests_&_Sage-grouse_Leks.mxd

This document is for reference purposes only and should not be used as a legal document. JBR makes no guarantees to the accuracy of the data contained herein or any loss resulting therefrom.

APPENDIX A

APLIC Guidance on Power Line Construction

CONSTRUCTION DESIGN STANDARDS*

In certain habitats that have power equipment and the potential for avian interactions, the design and installation of new facilities, as well as the operation and maintenance of existing facilities should be bird friendly. Inclusions of accepted construction standards for both new and retrofit techniques are highly recommended for inclusion in an APP. Companies can either rely upon construction design standards found in APLIC's *Suggested Practices for Raptor Protection on Power Lines: The State of the Art in 1996* and *Mitigating Bird Collisions with Power Lines: The State of the Art in 1994*, or the most current editions of these documents, or may choose to develop their own internal construction standards that meet or exceed these guidelines. These standards should be used in areas where new construction should be avian-safe, as well as where existing infrastructure needs to be retrofitted. An APP bird policy may require that all new or rebuilt lines in identified avian use or problem areas be built to current safe standards. Implementing avian-safe construction standards in such areas will reduce future legal and public relations problems and enhance service reliability.

New Construction

Distribution, transmission and substation construction standards must meet National Electric Safety Code (NESC) requirements and should provide general information on specialized construction designs for avian use areas. Avian-safe construction, designed to prevent electrocutions, must provide conductor separation of 60 inches between energized conductors and grounded hardware, or must cover energized parts and hardware if such spacing is not possible. Some common examples of avian- safe construction and retrofit techniques to reduce electrocution risks are presented in this section. Additional information can be found in *Suggested Practices for Raptor Protection on Power Lines.*

In areas where birds frequently collide with conductors/ground wires, or where

* Only examples of common structure configurations are presented in these Guidelines. See current edition of *Suggested Practices* for additional configurations and recommendations.

Modification of Existing Facilities

Modification of existing facilities is necessary when dead and/or injured protected birds are found, where high-risk lines are identified, or concerns of legal compliance are at issue. A “problem pole” is one where there has been a documented avian collision, electrocution, problem nest material or where there is a high risk of an avian mortality. The need for this remedial action may result when "problem poles" are identified through bird mortality records or field surveys, or when the company is notified by agency representatives or concerned customers. System reliability concerns due to bird interactions may also result in requests from field operations staff. Retrofitting to prevent electrocutions could include: 1) covering jumper wires, conductors and equipment; 2) discouraging perching in unsafe areas; 3) reframing; or 4) replacing a structure.

The objectives of remedial action are to:

1. Prevent or reduce avian mortality and outages related to bird electrocutions, collisions, or nests;
2. Provide 60-inch minimum horizontal separation between energized conductors and/or energized conductors and grounded hardware;
3. Insulate hardware or conductors against simultaneous contact if adequate spacing is not possible;
4. Discourage birds from perching in unsafe locations;
5. Provide safe alternative locations for perching or nesting; or
6. Increase the visibility of conductors or shield wires to prevent avian collisions.

Site-Specific Plans

The factors that create a hazard for birds near power lines are complex and often site-specific. Therefore, the most efficient solution for correcting a problem line is a site- specific plan that satisfies unique local conditions (*i.e.*, topography, avian populations, prey populations, land use practices, line configuration, adjacent wetlands, historical bird use areas, etc.). The plan is comprised of recommendations for the most appropriate remedial action to the poles or lines causing the problem, and should include a timetable for job completion. When a problem area or line is identified, a site meeting may be conducted with engineering and operations personnel to provide guidance on line modifications, and with company biologists or consultants to provide input on biological aspects of the affected species. The timeframe for action will be based on agency requests, public relations, budget, logistical and manpower constraints, as well as biological considerations that affect species vulnerability. The application of remedial measures to a few "problem poles" or spans can reduce problems over a wide area.

Electrocutions: Avian-Risk Designs

This section provides information about designs which have historically caused avian electrocution problems. These designs should be avoided in known raptor or other protected bird use areas and rural sites.

Most lines that electrocute raptors or other large birds are primary distribution lines. Problems occur most often when:

1. The distance between conductors is less than the wingspan or height of a landing or perching bird (see Figure 1).
2. Hardware or equipment cases are grounded and are in close proximity to energized conductors, energized parts or jumper wires (see Figure 2).

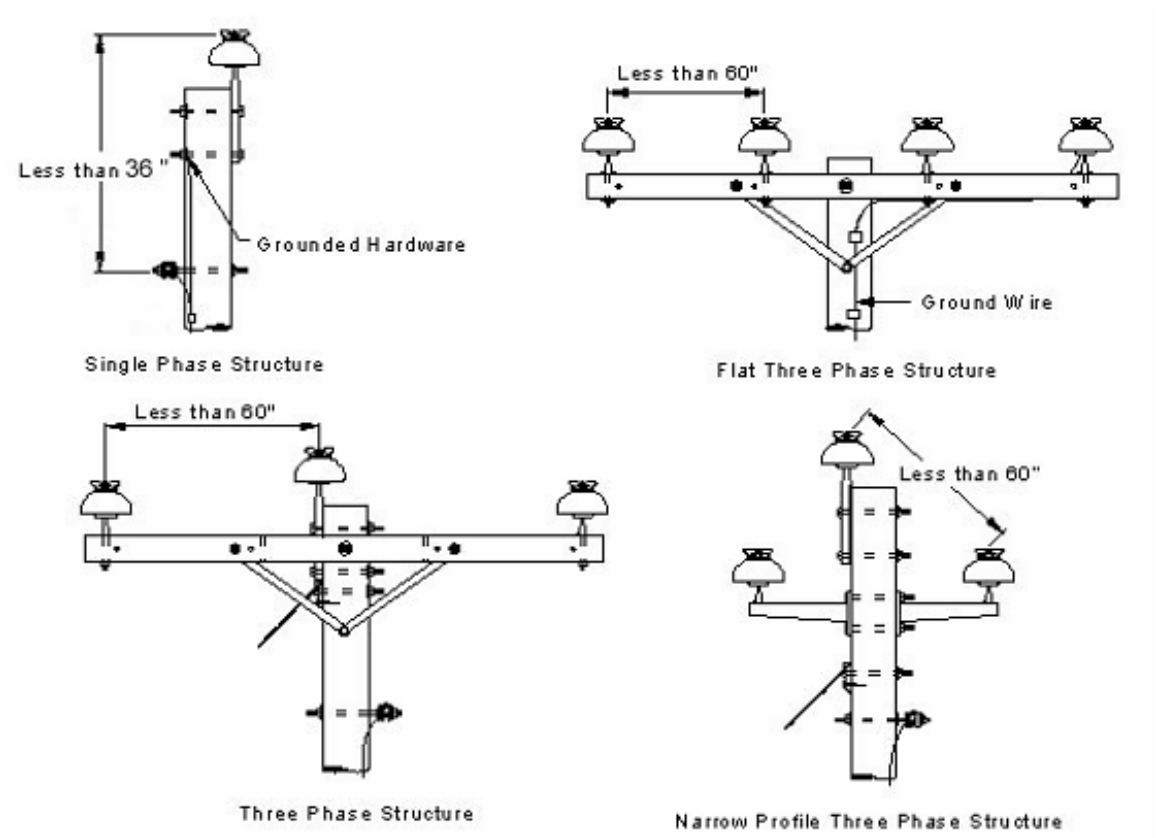

Figure 1 Typical Avian-Risk Structures

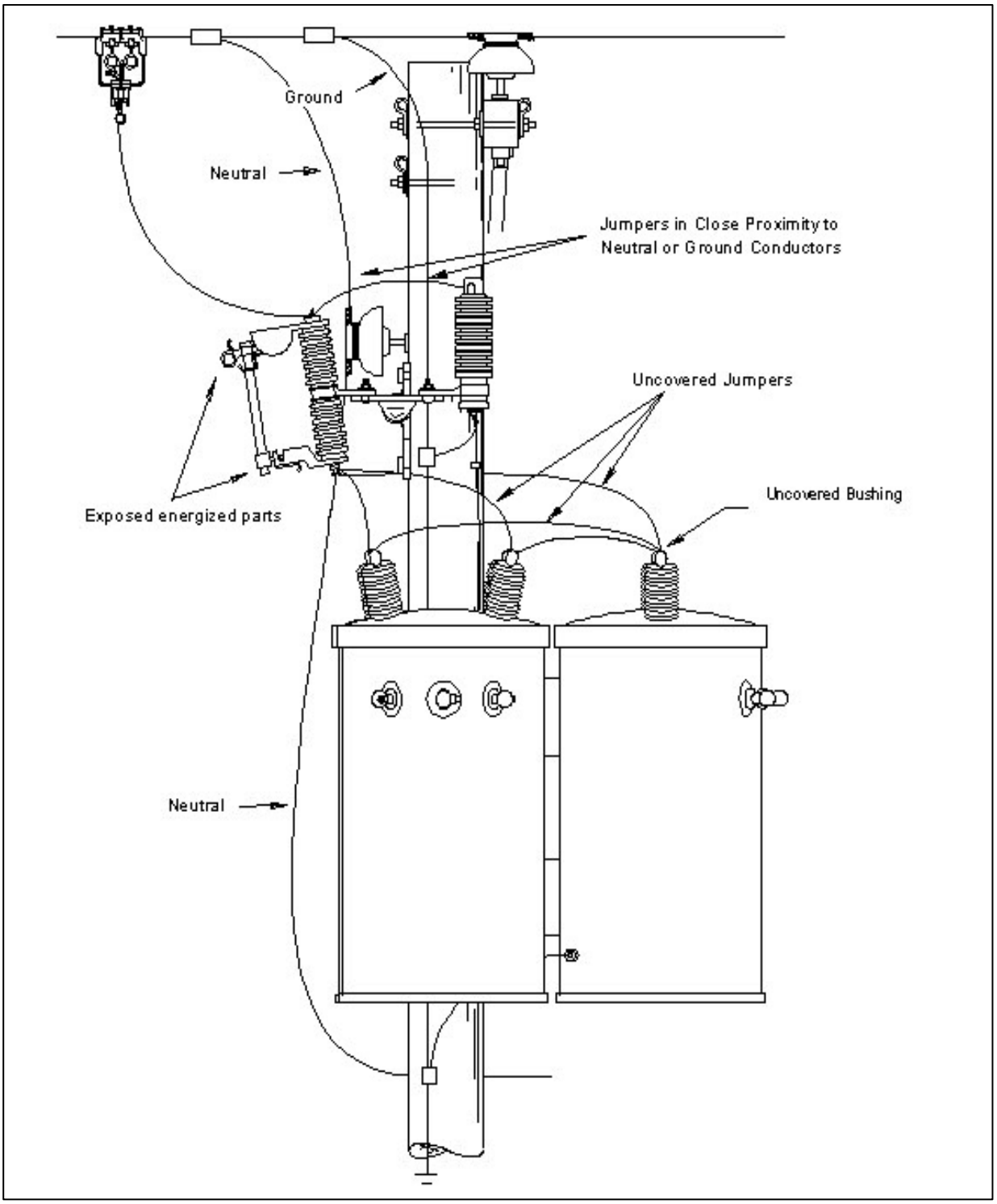

Figure 2 Typical Avian-Risk Equipment Structure

Minimizing Electrocutions: Avian-Safe Designs and Modifications

This section provides information on designs and criteria for constructing new lines or rebuilding existing lines to avian-safe standards.

Proper Design of New Facilities

The following dimensions for primary structures are intended for use in areas with populations of raptors or other large birds or in rural sites (areas outside city limits or beyond incorporated areas with commercial or residential development). Nonetheless, avian-safe construction should be considered to improve system reliability and avian protection whenever it does not conflict with other considerations. When a new line or extension is designed, avian-safe standards for construction of the distribution system should be followed (see Figures 3 and 4 for typical safe designs).

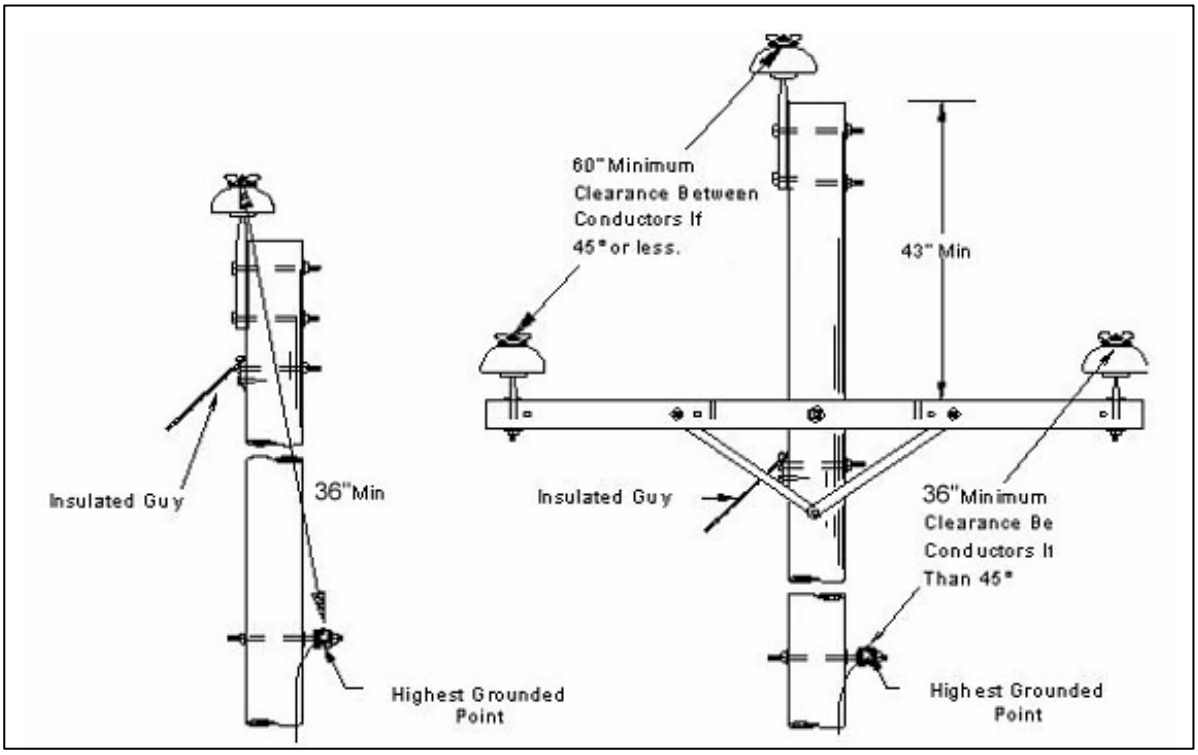

Figure 3 Typical avian safe structures: single phase (left), three-phase with lowered 8-foot crossarm (right).

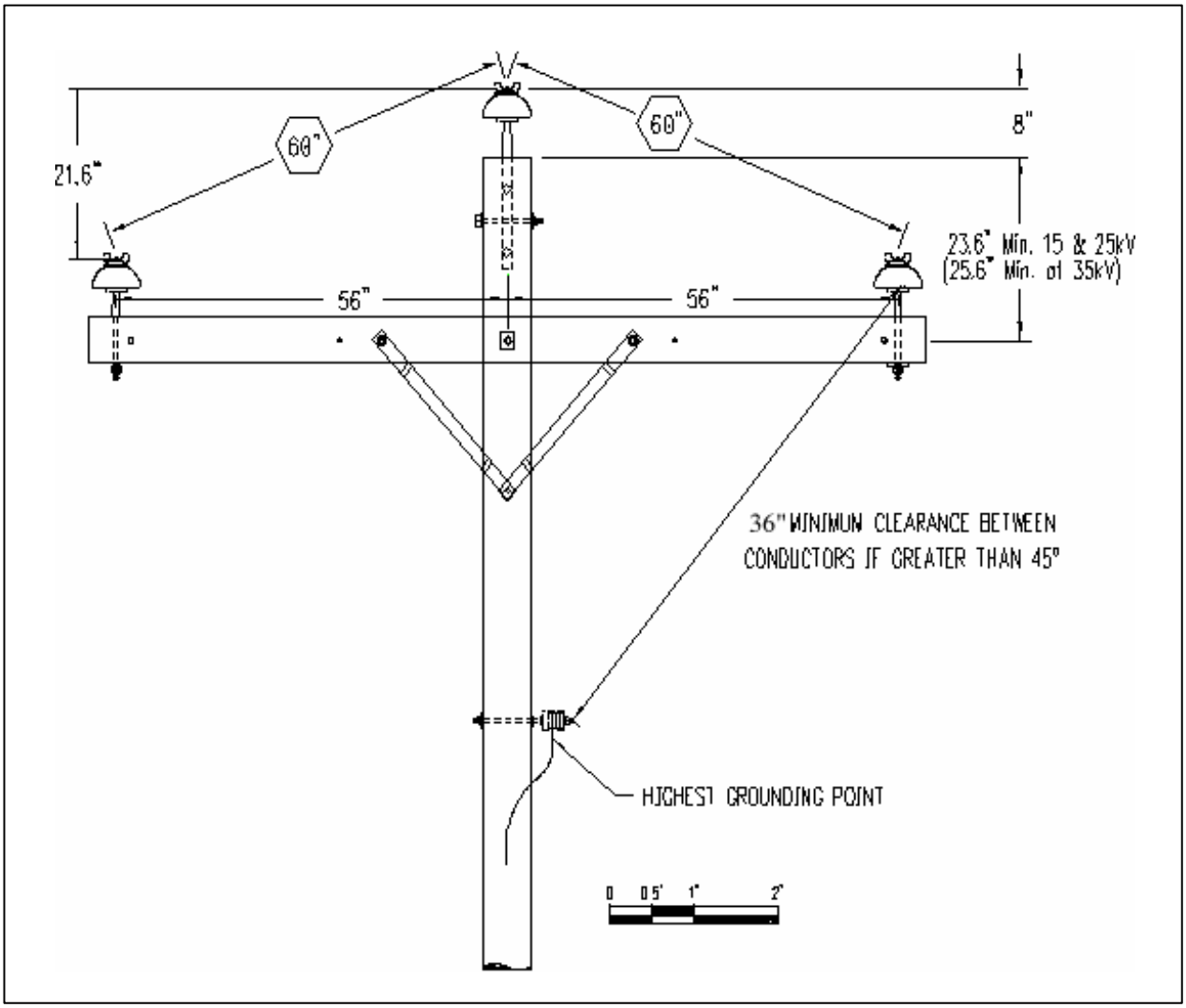

Figure 4 Typical Three-Phase Avian-Safe Structure with 10-foot Crossarm.

On single phase structures, a minimum vertical separation of 36 inches from phase to ground is needed to safely accommodate eagles and most wading birds (Figure 3). On three phase structures, a vertical clearance of at least 43 inches between un-insulated conductors, ground wires and grounded hardware on poles with 8-foot crossarms will provide the 60-inch required clearance (Figure 3). Separation can be accomplished by lowering crossarms and neutral attachments, or if vertical space is not available, an 8-foot crossarm can be replaced with a 10–foot arm (see Figure 4). If there is not enough pole height to drop the crossarm, a 10-foot crossarm can be the economical choice. Structural strength of the longer arm must be considered if the arm is replaced. Also, narrow rights-of-way may dictate the horizontal width of a crossarm, possibly requiring more pole height to achieve avian-safe spacing. Regardless of the configuration, hardware should not be grounded above the neutral position.

An alternate method for ensuring separation of energized conductors is to use vertical construction (see Figure 5). This is not the preferred method of separation, since considerable pole height is required to attain adequate clearance, making this an expensive solution. However, it may be useful in some situations, such as turning corners, where normal separation methods are not possible.

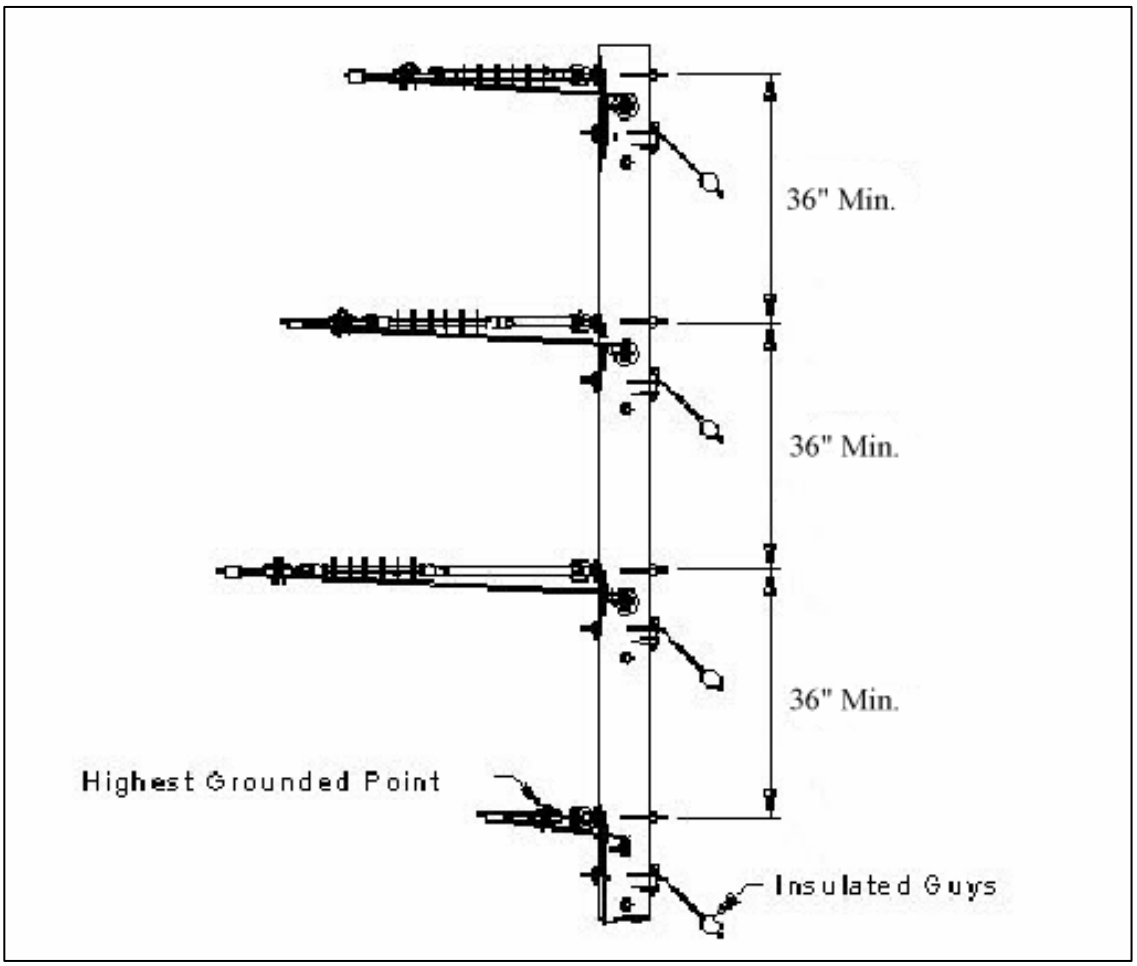

Figure 5 Typical Avian-Safe Three-Phase Vertical Corner Configuration

Modification of Existing Structures

On existing structures where raptors or other large birds have been electrocuted or injured, the preferred remedial measure is to provide 60–inch separation between energized conductors. Reframing using a 10–foot crossarm which allows 60–inch separation between conductors may be a suitable alternative to pole replacement.

However, pole replacement utilizing a safe design may be required on poles where bird mortalities have been documented and other safe modifications are not feasible due to pole height or condition.

Other remedial options include covering conductors and equipment or installing bird perch guards (triangles) or triangles with perches. These options do not offer total protection for birds, but may greatly reduce the chance of avian electrocutions. These options should be used when separation of the conductors is not possible, or where equipment is on the pole.

Perches and Guards

If conductor separation cannot be achieved and covering or reframing is impractical, perch guards (triangles) with optional perches may be used for large perching bird protection (Figure 6). Since raptors will often perch on the highest vantage point, the installation of perch guards between closely-spaced conductors and the placement of perches above existing arms and conductors may keep a bird from contacting energized parts or wires. Perches may not be effective when used without perch guards. Perches and guards, when properly installed, are not an absolute solution, but they do reduce the risk to birds. Ideally, when a perch guard is installed, an alternative, safe perch site should be provided. The open part of the crossarm, as shown in Figure 8, could serve as such a site. Perch guards are generally 18 to 22 inches wide and should not be used when conductor spacing is greater than 32 inches. When spacing is between 32 and 60 inches, use an insulator cover (see Figure 7) instead of a triangle or perch. Protective equipment should not be installed when conductors are more than 60 inches apart.

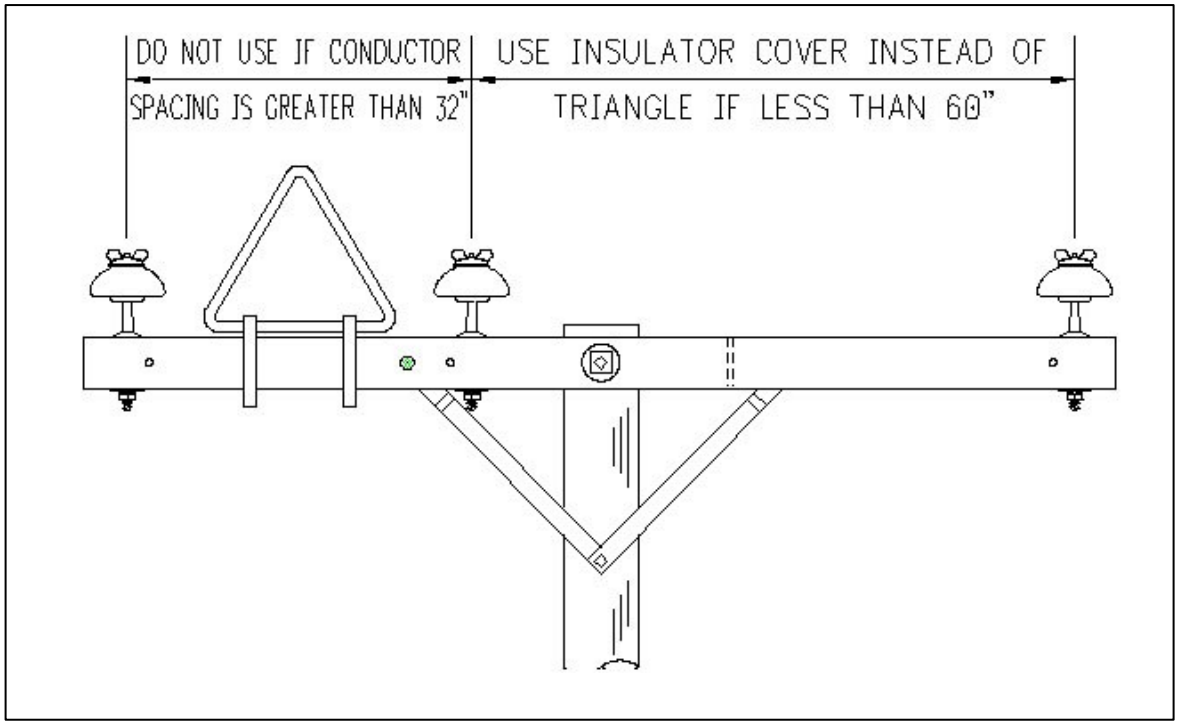

Figure 6 Properly Installed Perch Guard

Covering Conductors

Where adequate separation of conductors, or conductors and grounded parts, cannot be achieved, covering conductors may be the only solution short of reframing or replacing structures. Covering material should be used to cover both the conductor and the insulator. On three phase structures, the cover should extend a minimum of three feet from the pole top pin insulator (see Figure 7). Occasionally, on double circuits or distribution underbuild, a smaller (32 to 36- inch) one–piece cover may be used in areas where eagles or other large birds are absent. There are many manufactures of insulator covers. Insulator covers are similar to the temporary cover-ups used to protect crews working on energized lines. **However, the products should not be used for human protection or considered as insulation.**

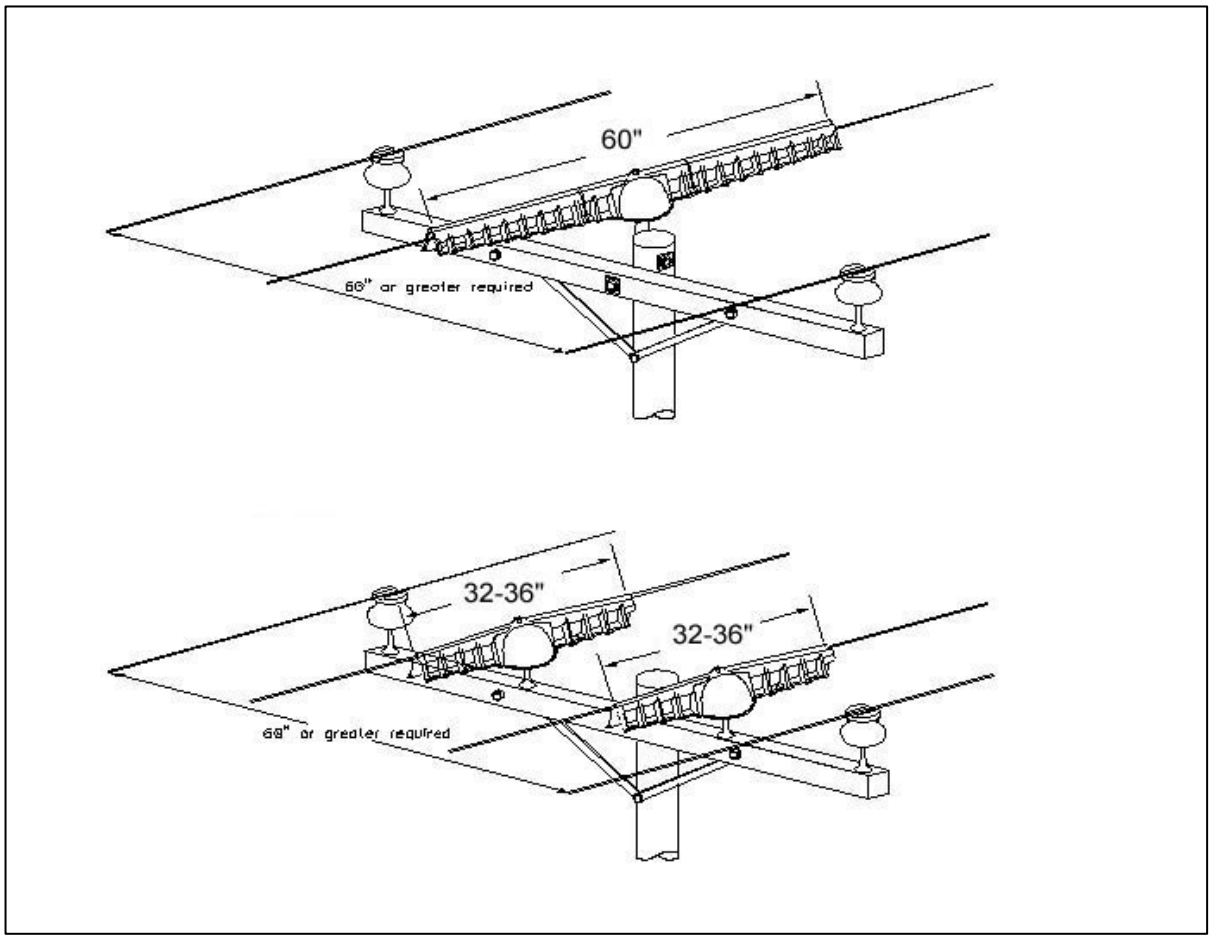

Figure 7 Conductor and Insulator Covers

Covering Equipment Parts

If transformers, cutouts or other energized or grounded equipment are present on the structure, jumpers, cutouts and bushings should be covered to decrease the chance of a bird electrocution (Figure 8). For jumper wires, use a bird jumper wire guard, cover-up hose or insulated power cable. For cutouts, various covers are available to fit different sizes and styles of cutouts. For bushings, use a bushing guard that provides the protection needed. (*Note* - Your APP should include specifications on materials your utility will accept).

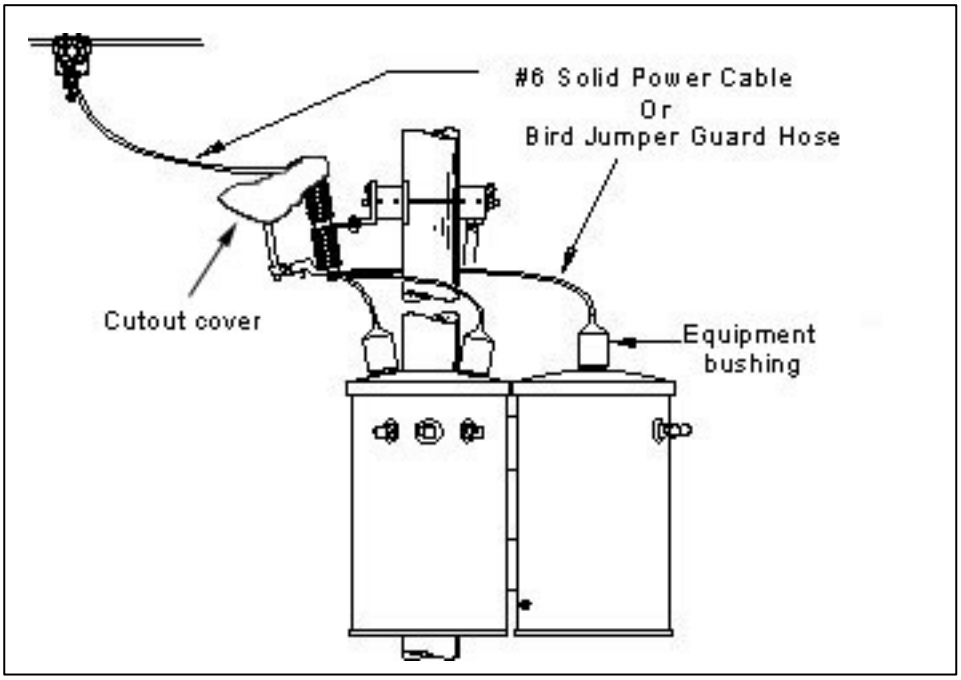

Figure 8 Hose and Bushing Caps

Collisions: Bird Protection

The proximity of a line to high bird-use areas, vegetation that may attract the birds, and topographical features that affect local and migratory movements should be considered when determining the extent of necessary remedial action or when siting a new line. Avoiding construction of new lines in areas of high bird use may be the best way to prevent or minimize collision issues.

On existing lines, the risk of collision may be reduced or eliminated by burying or relocating the line, reconfiguring the line, removing the overhead ground wire, or marking the line to increase visibility. Because in most instances remediation of only a few spans will eliminate the problem, burying, relocating or reconfiguring the line are not cost-effective solutions. Removal of the overhead ground wire may not be feasible due to operational or safety concerns. However, research indicates that marking the shield wire (transmission lines) or conductors (distribution lines) to increase visibility significantly reduces the incidence of avian collisions.

Marker balls, swinging markers, bird flight diverters, or other similar devices are commercially available products designed to increase the visibility of overhead wires to birds. Examples of one type of swinging marker and a bird flight diverter are shown in Figure 9. While

some older clamping devices could damage lines, some of the newer devices have been designed to prevent damage to lines.

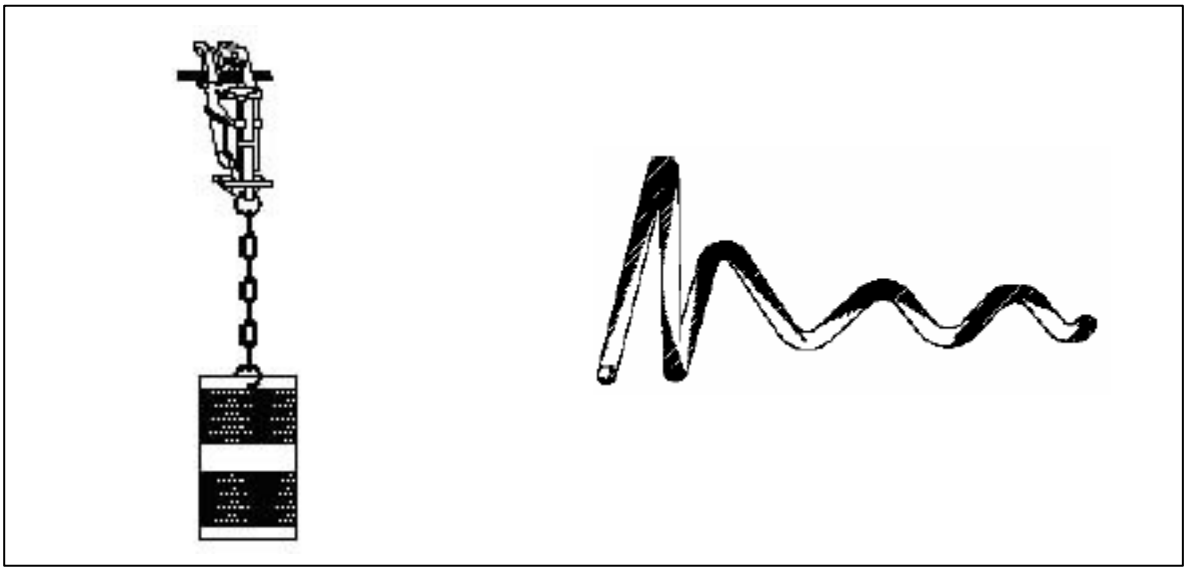

Figure 9 Swinging Marker Device (left) and Bird Flight Diverter (right)

APPENDIX B

Avian Incident and Nest Assessment Forms

NEVADA DEPARTMENT OF WILDLIFE ◆ HABITAT BUREAU

Industrial Artificial Pond Permit · Quarterly Wildlife Mortality Report Form

Project Title: _____ **Permit #:** _____

Address: _____ **County:** _____

City: _____ **State:** _____ **Zip:** _____

Mine ID # _____ **Report Year:** _____ **Quarter:** Jan – Mar ☐ Apr – Jun ☐ Jul – Sep ☐ Oct – Dec ☐

Wildlife Mortality Identification

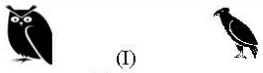 (I) **Raptors**	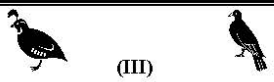 **(III) Upland Game**	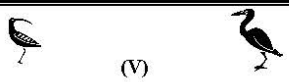 **(V) Shorebirds**
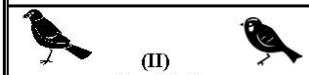 **(II) Songbirds**	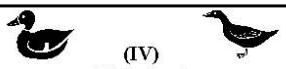 **(IV) Waterfowl**	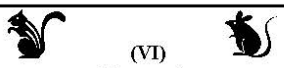 **(VI) Mammals**

Please list number and species under each category (DO NOT leave blank)

Example:

RAPTOR (I) 0
SONGBIRD (II) ..... 1 sparrow, 2 wren
UPLAND GAME (III) ..... 1 quail
WATERFOWL (IV) ..... 3 mallard, 1 bufflehead, 4 gadwall
SHOREBIRD (V) 0
MAMMAL (VI) ..... 4 mice, 2 skunk, 1 ground squirrel
OTHER ..... 2 lizards, 1 rattlesnake

Mortalities Associated <u>with</u> Permitted Pond Solutions or Structures

	Number and Species Identification **(DO NOT leave blank)**
RAPTOR (I)	_____
SONGBIRD (II)	_____
UPLAND GAME (III)	_____
WATERFOWL (IV)	_____
SHOREBIRD (V)	_____
MAMMAL (VI)	_____
OTHER	_____

(Report Mortalities NOT Associated with Permitted Pond Solutions or Structures on Back of Form)

REPORTER: _____ DATE: _____

ADDRESS: _____

CITY: _____ STATE: _____ ZIP: _____ PHONE: _____

Mortalities Not Associated with Permitted Pond Solutions or Structures

	Number And Species Identification **(DO NOT leave blank)**
RAPTOR (I)	_____
SONGBIRD (II)	_____
UPLAND GAME (III)	_____
WATERFOWL (IV)	_____
SHOREBIRD (V)	_____
MAMMAL (VI)	_____
OTHER	_____

(Report Mortalities Associated with Permitted Pond Solutions or Structures On Front Of Form)

Remarks:

_____

_____

_____

_____

_____

_____

_____

_____

_____

_____

_____

Please comment on any circumstances which you feel may be important, particularly when you feel one or more mortalities may have occurred under unusual conditions.

Please submit form to the appropriate regional office listed below:

WESTERN REGION
NEVADA DEPARTMENT OF WILDLIFE
WESTERN REGION MINING BIOLOGIST
1100 VALLEY ROAD; RENO NV 89512
TELEPHONE: (775) 688-1500
COUNTIES: CARSON CITY, CHURCHILL, DOUGLAS, HUMBOLDT, LYON, MINERAL, PERSHING, STOREY, WASHOE

SOUTHERN REGION
NEVADA DEPARTMENT OF WILDLIFE
SOUTHERN REGION MINING BIOLOGIST
P.O. BOX 1032; TONOPAH NV 89049
TELEPHONE: (775) 482-3153
COUNTIES: CLARK, ESMERALDA, LINCOLN, NYE

EASTERN REGION
NEVADA DEPARTMENT OF WILDLIFE
EASTERN REGION MINING BIOLOGIST
60 YOUTH CENTER ROAD; ELKO, NV 89801
TELEPHONE: (775) 777-2300
COUNTIES: ELKO, EUREKA, LANDER, WHITE PINE

Example 7. Dead bird/nest reporting form. This form can be used in conjunction with the Bird Mortality Tracking System software available from APLIC.

Dead Bird/Nest Form

Operations Area:

Dead Bird (circle one)		**or**	**Nest (circle one)**
Crow/magpie/raven	Eagle		Active
Hawk/falcon/osprey	Owl		Inactive
Small bird (protected)	Waterfowl		
Unknown species			

Bird Count_____

Date Found_____**Time Found**_____

Sign of Death (circle one)

Collision Electrocution Shot Unknown

County_____

Finder's Name_____

Finder's Phone_____

Line Name/Circuit No._____

Pole Identification No._____

Recommended Action (circle)

Dead Bird Actions	*Nest Actions*
Cover transformer equipment	Install nest platform
Install insulator cover(s)	Relocate nest
Install triangle(s)	Trim nest
Reframe structure	Install nest guards
Replace structure	Remove nest
Remove pole	Evaluate to determine appropriate action
De-energize	No action
Install bird flight diverters/fireflies	
Evaluate to determine appropriate action (Provide action in comments)	
Continue to monitor line (Justification required)	
No action (Justification required)	

Comments_____

APPENDIX C

Partial List of Avoidance and Minimization Measures for Non-Operational Impacts

Pre-Construction Migratory Bird Nesting Surveys

- All ground-disturbing activities will be conducted outside the migratory bird nesting season (March 15 – July 31). If ground-disturbing activities cannot be avoided during this time period, pre-construction nest surveys shall be conducted by a BLM-approved biological monitor with the following guidelines:

- For raptors specifically, the holder will use the USFWS Utah Field Office Guidelines for Raptor Protection from Human and Land Use Disturbances (1999) to determine appropriate survey areas and disturbance buffers for active nests.

- For all non-raptor bird species, surveys shall cover all potential nesting habitat in and within 300 feet of the area to be disturbed.

- Surveys must be conducted between sunrise and three hours post-sunrise when birds are most active.

- Because there are no standardized disturbance buffers for active non-raptor bird nests, if active nests are detected, a no-disturbance buffer zone (as determined by USFWS, NDOW, and BLM) will be established. Nest locations shall be mapped and submitted to the BLM as needed.

- Active bird nests will not be moved during the breeding season unless the holder is expressly permitted to do so by the USFWS, BLM, and NDOW.

- All active nests and disturbance or harm to active nests will be reported within 24 hours to the USFWS, the BLM, and NDOW upon detection. The biological monitor will halt work if it is determined that active nests are being disturbed by construction activities, until further direction or approval to work is obtained from the appropriate agencies.

Golden Eagle Nest Monitoring

- Nest monitoring will be performed in accordance with the *Interim golden eagle inventory and monitoring protocols; and other recommendations* (Pagel et al., 2010);

- Monitoring of the known golden eagle nest will be required during construction and at least five years post-construction;

- Monitoring can and should be done from the main road;

- At least two observation periods per season shall be completed between March and June. Observation periods will last at least four hours, or until nest occupancy can be confirmed. Observation periods will be at least 30 days apart; and

- Surveyors need to be experienced with raptor identification and survey techniques. A report of findings should be submitted to Midway, NDOW, and BLM that includes dates, times, species seen, activity, etc.