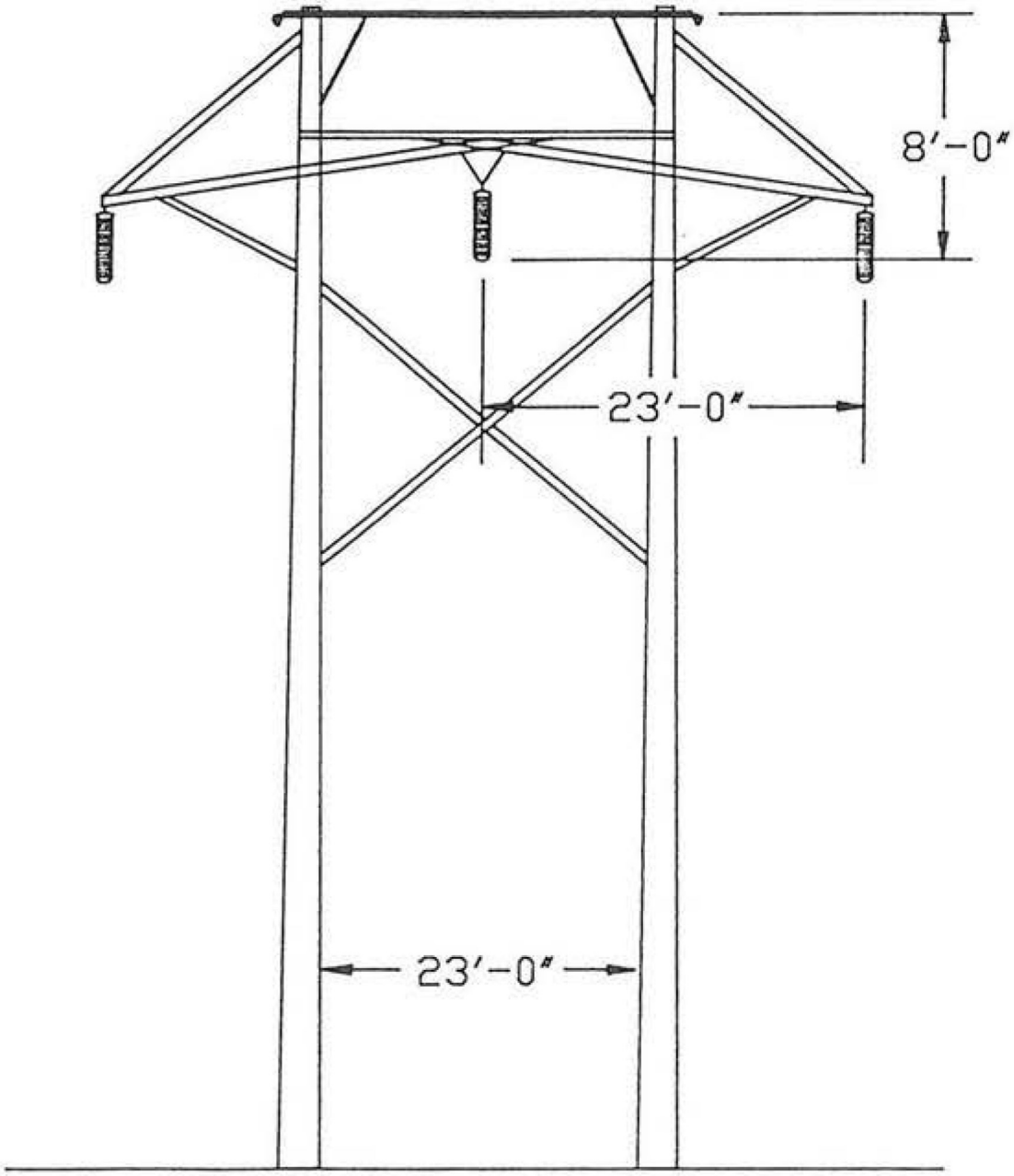

Figure 4
230 kV Wood H-Frame Structure