UNITED STATES DEPARTMENT OF THE INTERIOR
BLM, BOISE DISTRICT

EA #DOI-BLM-ID-B011-2011-0016-EA-NCA Joint Fire Science Project

Applicant (if any): **BLM Action**	Proposed Action: To construct three experimental treatment blocks totaling 363 acres (4.5 miles of fence) in the Morley Nelson Snake River Birds of Prey National Conservation Area (NCA), and apply a range of restoration-based fuel treatments, including mowing, targeted grazing, herbicide application, and native plant seeding. (Part of a cooperative project between BLM, U.S. Geological Survey (Joint Fire Science) and the Idaho Army National Guard.		EA No. DOI-BLM-ID-B011-2011-0016-EA
State: **Idaho**	County: **Ada**	District: **Boise**	
Prepared By: **FRFO ID Team**	Title: NCA Joint Fire Science Project		Report Date: 1/24/2012

LANDS INVOLVED

Meridian	**Township**	**Range**	**Sections**	**Acres**
Boise	02 S	01 E	22, 23, 26, 27, and 28	363

Consideration of Critical Elements	N/A or Not Present	Applicable or Present, No Impact	Discussed in EA
Air Quality			X
Areas of Critical Environmental Concern	X		
Cultural Resources			X
Environmental Justice (E.O. 12898)		X	
Farm Lands (prime or unique)	X		
Fish Habitat	X		
Soils/Floodplains			X
Forests and Rangelands			X
Migratory Birds			X
Native American Religious Concerns			X
Invasive, Nonnative Species			X
Wastes, Hazardous or Solid	X		
Threatened or Endangered Species			X
Social and Economic	X		
Water Quality (Drinking/Ground)			X
Wetlands/Riparian Zones	X		
Wild and Scenic Rivers (Eligible)	X		
Wilderness Study Areas	X		

Table of Contents

1.0 Introduction 4
1.1 Need for and Purpose of Action 4
1.2 Summary of Proposed Action 5
1.3 Location and Setting 5
1.4 Conformance with Applicable Land Use Plan 6
1.5 Relationship to Statutes, Regulations, and Other Requirements 6
1.6 Scoping and Development of Issues 7
2.0 Description of the Alternatives 8
2.1.1 Alternative A - No Action/Continue Present Management 8
2.1.2 Alternative B - Proposed Action 8
2.1.3 Alternative C 14
3.0 Affected Environment and Environmental Consequences 15
3.1 Soil Resources 16
3.1.1 Affected Environment – Soils and Watershed 16
3.1.2 Environmental Consequences – Soils and Watershed 16
3.1.2.1 Alternative A 16
3.1.2.2 Alternative B 17
3.1.2.3 Alternative C 18
3.2 Upland Vegetation 19
3.2.1 Affected Environment – Vegetation Including Noxious and Invasive Species 19
3.2.2 Environmental Consequences – Vegetation Including Noxious and Invasive Species 19
3.2.2.1 Alternative A 19
3.2.2.2 Alternative B 20
3.2.3 Alternative C 20
3.2.4 Affected Environment (Wildlife) 20
3.2.5 Environmental Consequences – (Wildlife) 21
3.2.5.1 Alternative A 21
3.2.5.2 Alternative B 21
3.2.5.3 Alternative C 21
3.3 Special Status Species Animals and Plants 21
3.3.1 Affected Environment –Special Status Species Animals and Plants 22
3.3.2 Environmental Consequences – Special Status Species Animals 22
3.3.2.1 Alternative A 22
3.3.2.2 Alternative B 23
3.3.2.3 Alternative C 24
3.4 Air Quality 24
3.4.1 Affected Environment – Air Quality 24
3.4.2 Environmental Consequences – Air Quality 24
3.4.2.1 Alternative A 24
3.4.2.2 Alternative B 24
3.4.2.3 Alternative C 25
3.5 Water Quality 25
3.5.1 Affected Environment – Water Quality 25
3.6 Cultural and Tribal Resources 25

3.6.1 Affected Environment –Cultural and Tribal Resources 25
3.7 Livestock Grazing 25
3.7.1 Affected Environment – Livestock Grazing 25
3.7.2 Environmental Consequences – Livestock Grazing 26
3.7.2.1 Alternative A 26
3.7.2.2 Alternative B 26
3.7.2.3 Alternative C 26
3.8 Cumulative Impacts 26
3.9 Consultation and Coordination 27
3.10 List of Preparers 28
3.11 List of Agencies, Organizations, and Individuals Consulted 28
3.12 Public Participation 28
4.0 Literature Cited 29
5.0 List of Figures, Tables and Appendices 34

Environmental Assessment # DOI-BLM-ID-B011-2011-0016

Joint Fire Science NCA

1.0 Introduction

1.1 Need for and Purpose of Action

The Snake River Plain ecoregion experiences the highest fire density (occurrence and geographic extent) in the western United States, with wildfire occurring much more frequently than under historic conditions. Cheatgrass (*Bromus tectorum*), a widespread invasive annual grass, has played a major role in reducing the fire return interval, leading to a loss of native shrubs and herbaceous plants. Sagebrush communities on the Snake River Plain and adjacent foothills were identified as either converted to cheatgrass, or at high risk of conversion (Whisenant 1990, Suring et al. 2005).

The 483,000-acre Morley Nelson Snake River Birds of Prey National Conservation Area (NCA) is located in the heart of the Snake River Plain in southwestern Idaho, adjacent to the state's capitol, Boise, and largest population center. The NCA was established in 1993 to protect a unique environment that supports one of the world's densest concentrations of nesting birds of prey (Kochert et al. 2003). Falcons, eagles, hawks and owls are found there in unique profusion and variety. It is part of the Bureau of Land Management's (BLM) National Landscape Conservation System (NLCS).

The NCA's enabling legislation [16 United States Code (USC) 460iii-2; 107 Stat. 304] emphasizes the conservation, protection, and enhancement of raptor populations and habitat and values associated with the scientific, cultural, and educational resources of public lands in the NCA. Tied to this legislation are specific resource management plan (RMP) objectives and goals (2008c), such as:

- Restoration of 130,000 acres of shrub habitat
- Completion of 100,000 acres of fuels management projects
- Conversion of 100,000 acres of annual grasslands to a perennial plant community
- Designation of up to 5,000 acres for research purposes

Frequent wildfires and other disturbances have converted over seventy percent of the NCA landscape from native sagebrush habitat to a non-native annual dominated system. More than 59% of the NCA burned between 1980-2003, and ~32% has burned two or more times during that period. Only 37% of the NCA is still occupied by native shrublands leading to a loss of habitat for raptor prey base species (Kochert et al. 2004a).

The proposed project area burned most recently in 1985, and was drill seeded and chained with rangeland seed mixes dominated by non-native perennial grasses to provide site stabilization. However, these treatments can incur unwanted impacts, including removal of biological soil crusts, extant native bunchgrasses, and mixing of soil profiles, which alter biophysical and biological soil properties (USDI 2000) In addition, the seeded plants may be of limited ecological value for raptor prey base species (Yensen 1992), reduce the re-establishment success

of shrub species (Eliason 2008) and reduce general above- and below-ground ecological functional group diversity (Pellent et al. 2005).

As a result of these disturbance legacies, raptor prey habitat has been significantly reduced. Recovery of native vegetation structure and diversity, including shrub cover and herbaceous perennial plants, is critical to protecting crucial raptor prey base, increasing resilience to climate change, and reducing wildfire frequency. Despite Federal mandates to restore degraded rangelands (Healthy Lands Initiative 2007) and reduce fire risk on public lands (National Fire Plan 2008a), there is often little information on how restoration treatments in sagebrush steppe actually influence fuel loads, despite various application methods (Perryman et al. 2003). There are few such investigations, within project sites on the Snake River Plain, despite such additional national, multi-agency efforts like the Sagebrush Steppe Project and Great Basin Restoration Initiative.

The proposed cooperative project would provide the experimental framework and necessary replication to provide information on the effectiveness of treatments, such as mowing, grazing, herbicide application, and seeding with native species that demonstrate more competitive characteristics (Leger 2008). To accomplish this, the U.S. Geological Survey (USGS) and BLM would address three primary questions specific to the project: 1) What are current fuel loads along successional/invasion gradients in sagebrush ecological sites in the NCA?; 2) How do fuel reduction treatments and grazing practices influence fuels in invaded areas formerly dominated by sagebrush?; and 3) What are the fine-scale spatial patterns of fuels across landscapes, and how can management actions be used to alter these patterns?

To determine the effects of these fuels treatments on below-ground resources, a tandem study would be conducted by Boise State University's (BSU) Department of Biological Sciences' principal investigator, Marie-Anne DeGraaf. The questions posed by her research would focus on: 1) How do grazing and fire reduction treatments affect net soil sequestration and soil organic matter dynamics?, and 2) How do these treatments create a "legacy effect", e.g. long-term changes in below-ground resources?

1.2 Summary of Proposed Action

Three experimental treatment blocks, totaling 363 acres (4.5 miles of fence) in the NCA would be constructed, and a range of fuel treatments applied within. Fuel treatments would include mowing residual, non-native vegetation, herbicide applications to control invasive annual vegetation, grazing, and drill and broadcast seeding of native Great Basin plant species.

1.3 Location and Setting

The project area is located 20 miles south of Kuna, Idaho and extends southeast of Dedication Point (Figure 1). It is within Ada County at an elevation of 3,100 feet. Average annual precipitation is 7.88 inches at Swan Falls Dam and 10.06 inches at Kuna 2 NNE (Western Regional Climate Data 2012).

1.4 Conformance with Applicable Land Use Plan

LUP/Document	Sections/Pages	Date Approved
Snake River Birds of Prey National Conservation Area - Resource Management Plan and Record of Decision	Soil (pp. 2-7 and 2-8); Vegetation (pp. 2-8 - 2-10) Wildland Fire Ecology (pp. 2-26 – 2-28)	2008
Bruneau-Kuna Management Framework Plan	Terrestrial Wildlife and Watershed sections.	1993

The Proposed Action would be in conformance with the 2008 NCA Resource Management Plan Record of Decision (USDI 2008b).

In addition, the Wildland Fire Ecology objectives identify management actions specific to the use of biological, chemical, and mechanical fuels treatment methods to implement conversion of annual dominated grassland to perennial plant communities (p. 2-28).

1.5 Relationship to Statutes, Regulations, and Other Requirements

The following laws, executive orders, regulations, manuals, and policies provide the foundation for management of public land:

- Federal Land Policy and Management Act of 1976, as amended (FLPMA)
- National Environmental Policy Act of 1969, as amended (NEPA)
- BLM *Final Vegetation Treatments Using Herbicides on BLM Lands in 17 Western States Programmatic Environmental Impact Statement*, 2007

Executive Order 13186 expressly requires that Federal agencies evaluate the effects of proposed actions and, in furtherance of the purposes of the Migratory Bird Treaty Act (16 U.S.C. 703-711), the Bald and Golden Eagle Protection Acts (16 U.S.C. 668-668d), and the Fish and Wildlife Coordination Act (16 U.S.C. 661-666c), on migratory birds (including eagles) pursuant to NEPA "or other established environmental review process;" restore and enhance the habitat of migratory birds, as practicable; identify where unintentional take reasonably attributable to agency actions is having, or is likely to have, a measurable negative effect on migratory bird populations; and, with respect to those actions so identified, the agency shall develop and use principles, standards, and practices that will lessen the amount of unintentional take, developing any such conservation efforts in cooperation with the Service

<u>Cultural Resource Laws and Executive Orders</u>

The BLM is required to consult with Native American tribes to "help assure (1) that federally recognized tribal governments and Native American individuals, whose traditional uses of public land might be affected by a proposed action, will have sufficient opportunity to contribute to the decision, and (2) that the decision maker will give tribal concerns proper consideration" (USDI, BLM Manual Handbook H-8120-1). Tribal coordination and

consultation responsibilities are implemented under laws and executive orders that are specific to cultural resources which are referred to as "cultural resource authorities," and under regulations that are not specific which are termed "general authorities." Cultural resource authorities include the National Historic Preservation Act of 1966, as amended (NHPA), Archaeological Resources Protection Act of 1979 (ARPA), and Native American Graves Protection and Repatriation Act of 1990, as amended (NAGPRA). General authorities include the American Indian Religious Freedom Act of 1979 (AIRFA), NEPA, FLPMA, and Executive Order 13007-Indian Sacred Sites. The proposed action is in compliance with the aforementioned authorities.

Southwest Idaho is the homeland of two culturally and linguistically related tribes: the Northern Shoshone and the Northern Paiute. In the latter half of the 19th century, a reservation was established at Duck Valley on the Nevada/Idaho border west of the Bruneau River. The Shoshone-Paiute Tribes residing on the Duck Valley Reservation today actively practice their culture and retain aboriginal rights and/or interests in this area. The Shoshone-Paiute Tribes assert aboriginal rights to their traditional homelands as their treaties with the United States, the Boise Valley Treaty of 1864 and the Bruneau Valley Treaty of 1866, which would have extinguished aboriginal title to the lands now federally administered, were never ratified.

Other tribes that have ties to southwest Idaho include the Bannock Tribe and the Nez Perce Tribe. Southeast Idaho is the homeland of the Northern Shoshone Tribe and the Bannock Tribe. In 1867 a reservation was established at Fort Hall in southeastern Idaho. The Fort Bridger Treaty of 1868 applies to BLM's relationship with the Shoshone-Bannock Tribes. The northern part of the BLM's Boise District was also inhabited by the Nez Perce Tribe. The Nez Perce signed treaties in 1855, 1863 and 1868. BLM considers off-reservation treaty-reserved fishing, hunting, gathering, and similar rights of access and resource use on the public lands it administers for all tribes that may be affected by a proposed action.

1.6 Scoping and Development of Issues

The Morley Nelson Snake River Birds of Prey NCA conducted internal scoping with an interdisciplinary team of Four Rivers Field Office and NCA specialists, USGS, Idaho Army National Guard, and Rocky Mountain Research and Experiment Station. External public scoping was conducted through electronic posting of the information package to the BLM Idaho State website and dissemination of hard copies to 16 individuals, non-governmental organizations and agencies between October 26, 2011 and November 28, 2011. Two comments, one email and one phone call, were received during the scoping process. They are summarized below:

Resource Advisory Council (RAC) member Ted Hoffman recommended that heavy grazing use, approaching 80% utilization, in alternate years with light use, such as 30% utilization, would provide information on the utility of prescriptive, strategic fuel reduction in different strips in different years. He also suggested a third seeding treatment consisting of just exotic plants, such as crested wheat and forage kochia. He also stated that he recognized that these additional treatments would increase the cost and the labor involved in this research.

Western Watersheds Project representative Katie Fite asked whether this was "just another fuel-break project". She was also concerned that grazing would not be excluded for a long enough period and that the effects of additional fencing were not being considered in relation to actually controlling or removing livestock instead of constructing more fencing to keep livestock from rehabilitation sites in general.

2.0 Description of the Alternatives

2.1.1 Alternative A - No Action/Continue Present Management

No treatments would be implemented to investigate fuel loading and restoration treatment effectiveness. No restoration or enhancement would occur within this portion of the NCA.

2.1.2 Alternative B - Proposed Action

Three experimental treatment blocks, totaling 363 acres (4.5 miles of fence), would be constructed in the NCA (Figure 1). Block 4 (Big Foot Fire) would not require additional fencing. Fuel treatments, including mowing of residual, non-native vegetation, herbicide applications to control invasive annual vegetation, grazing, and drill and broadcast seeding of native Great Basin plant species, would be randomly applied to plots within each block. The following describes the methods and treatment design specifications for the proposed action.

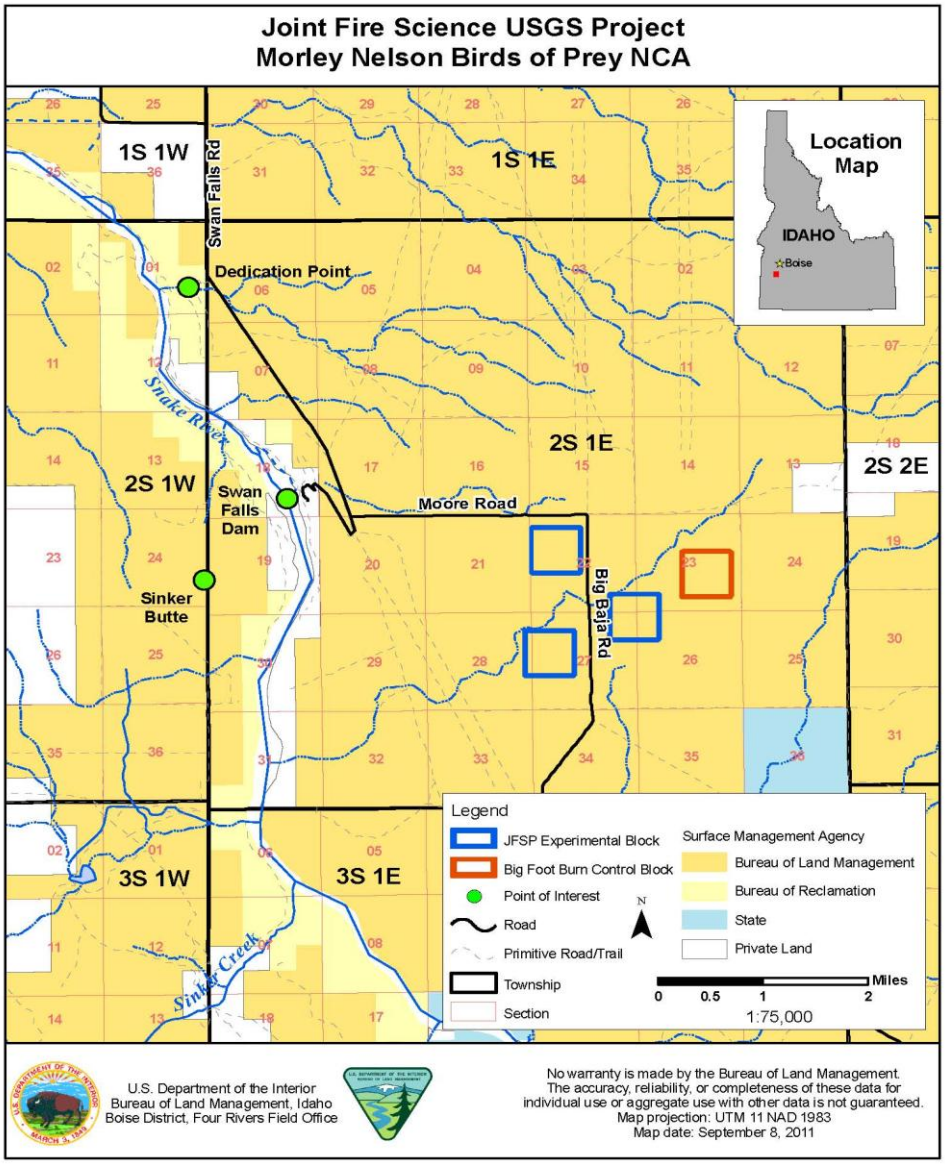

Figure 1. Proposed Project Area and Location of Treatment Blocks, Morley Nelson Snake River Birds of Prey National Conservation Area, Ada County, Idaho. (Red depicts block located in the 2011 Big Foot Fire)

<u>Treatment Types and Block - Plot layout:</u> In each experimental block (outlined in blue in Figure 1), there would be four weed (mowing and herbicide), two grazing, and two drill seed treatments randomly applied to the 2.5-acre plots (Table 1, Figure 2). A total of 4.47 miles of fence would be constructed to exclude livestock from half of each of the blocks (Table 2, Figure 2). The fourth block location (outlined in red in Figure 1) burned in the August 8, 2011 as part of the Big Foot wildfire and has been fenced as part of an Emergency Stabilization treatment, (DOI-BLM-ID-B010-2011-0068-DNA). No additional fencing would be required in or around Block 4 and treatments would only include drill seeding and weed treatments. All fence

construction would follow BLM standards that incorporate wildlife protection specifications (BLM Handbook H-1741 and HB-1741).

Table 1. Treatment Types Proposed for Experimental Plots in the Morley Nelson Snake River Birds of Prey NCA, Ada County, Idaho

Weed Treatment Types	Grazing Treatment Types	Seed Treatment Types
Mowed	Grazed	Seeded
Herbicide	Ungrazed (fenced control)	Not seeded (control)
Mowed and Herbicide		
No treatment (Control)		

Figure 2. Treatment Block Design* and Dimensions, Morley Nelson Snake River Birds of Prey NCA, Ada County, Idaho

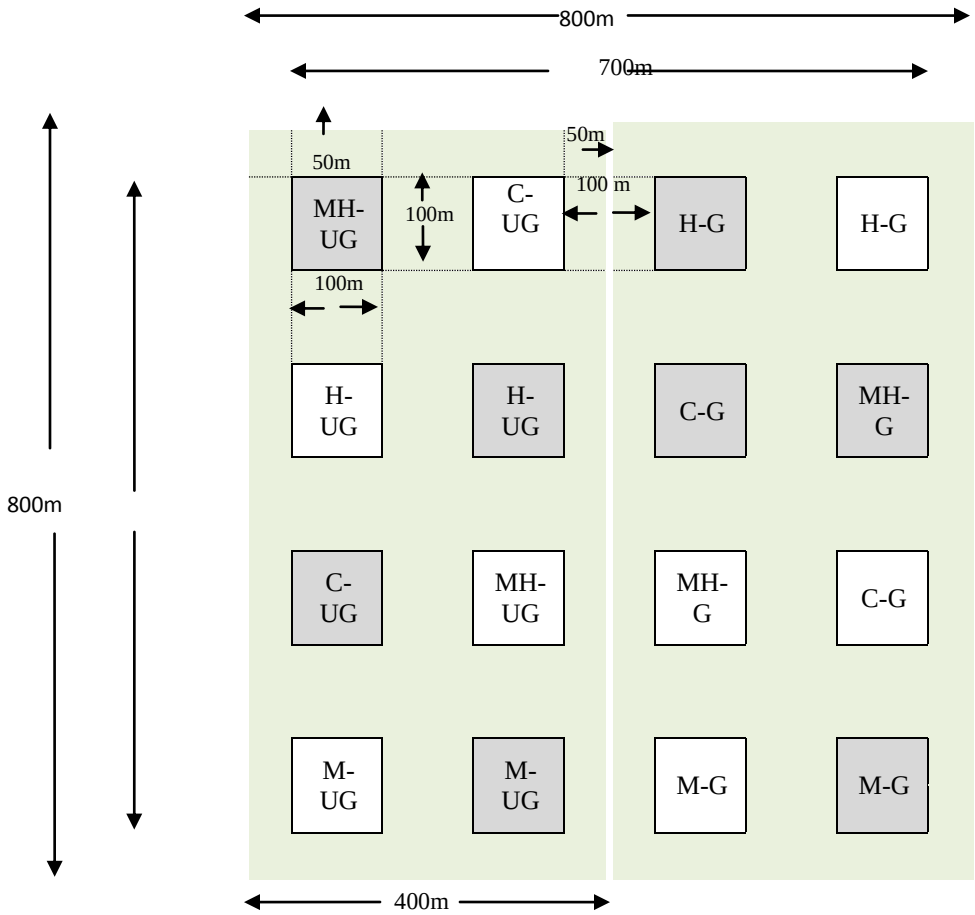

*Plot treatments for illustration only.

Treatment/Block Layout Legend:

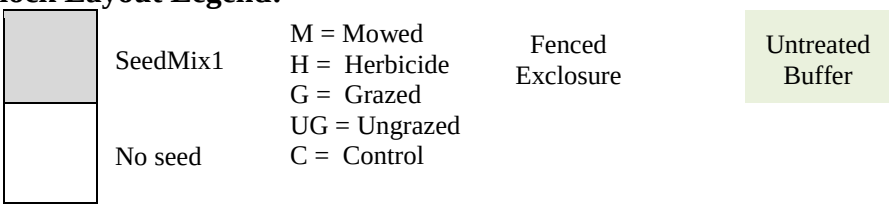

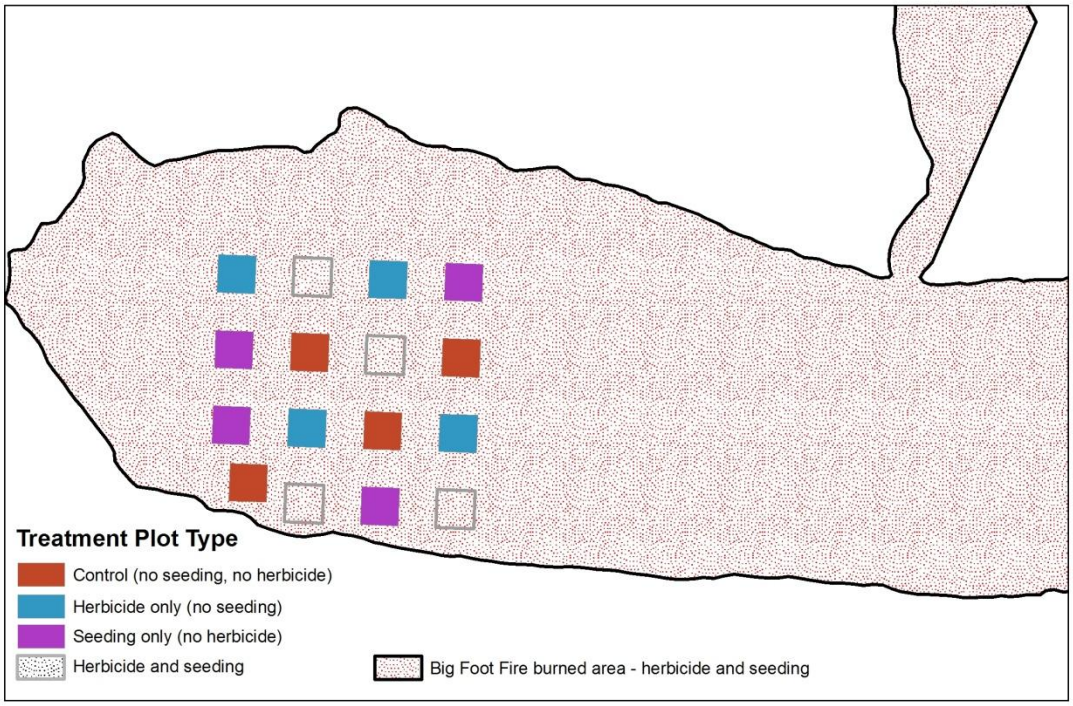

Figure 3. Big Foot Burn (F9BN) and Associated Fourth Block Design (red), Morley Nelson Snake River Birds of Prey NCA, Ada County, Idaho

General Treatment Descriptions

Mowing: Mowing would involve above-ground removal of vegetation to a two-inch stubble height, using a standard rubber-wheeled tractor (rotomower). Mowing treatments would occur between late May and mid-June.

Figure 4. Example of a Standard Rotomower

Herbicides: The following herbicides would be used as site preparation treatments to increase seeding success. Herbicide treatments would include a range of active ingredient (a.i.) amounts (Table 2)) depending on site conditions such as amount of surface litter. All a.i. amounts would be consistent with herbicide label recommendations.

Minimum Rates

Herbicide	oz a.i./acre	oz a.i./plot	oz a.i./block	oz a.i./all blocks
Glyposate	5.0	12.4	98.8	395.4
Imazapic	3.0	7.4	59.3	237.2
2-4D	10.0	24.7	197.7	790.7

Maximum Rates

Herbicide	oz a.i./acre	oz a.i./plot	oz a.i./block	oz a.i./all blocks
Glyposate	10.0	24.7	197.7	790.7
Imazapic	6.0	14.8	118.6	474.4
2-4D	10.0	24.7	197.7	790.7

Table 2. Range of herbicide Active Ingredient (a.i) amounts.

Herbicide would be applied using an all-terrain/utility terrain vehicle (ATV/UTV) and boom system. Application methods would strictly follow label specifications. The proposed herbicides are BLM-approved per the *Final Vegetation Treatments Using Herbicides on Bureau of Land Management Lands in 17 Western States Programmatic Environmental Impact Statement* (PEIS) (http://www.blm.gov/wo/st/en/prog/more/veg_eis.html).

Grazing: Livestock would be herded by a BLM permittee through the experimental "grazing" plots as a fuel reduction treatment. This would occur as regular fall/winter grazing use, per an existing BLM grazing permit in the Sunnyside Allotment.

Seeding: A native and native/cultivar seed mix would be applied using a minimum till drill. Table 3 provides a list of species that would be planted, depending on seed availability.

Plant Species	**Common Name**
Artemisia tridentata ssp. *wyomingensis*	Wyoming big sagebrush
Ericameria nauseosa	rubber rabbitbrush
Krascheninnikovia lanata	winterfat
Poa secunda	Sandberg bluegrass and associated cultivars
Elymus elymoides	bottlebrush squirreltail and associated cultivars
Elymus wawawaiensis	Snake River wheatgrass
Achillea millefolium var *occidentalis*	Western yarrow and associated cultivars
Eriogonum umbellatum	sulphur buckwheat
Lomatium dissectum	fern-leaf biscuitroot
Penstemon acuminatus	sharp-leaf penstemon

Table 3. Sample Species Used for Drill Seeding Treatment (Seeding Rates and Amounts Dependent Upon Species Availability)

Figure 5. Example of Till Depth of a Minimum Till Drill

Soil sampling: Within each treatment block, nine cores per subplot (100 meters x100 meters), in each of the three blocks, would be sampled every three months throughout the duration of the three-year study, using a standard, hand-operated soil auger. The cores would be 4.2 centimeters (cm) in diameter with a 15 cm depth.

Figure 6. Example of Hand-Held Soil Auger

2.1.3 Alternative C

Treatments would be as described in Alternative B, but herbicide type would be restricted to glyphosate. This alternative would address the efficacy of one herbicide type and its affects versus the combination of all three herbicides; Glyphosate, Imazapic and 2,4-D to control invasive non-native plant species on fuel loading and restoration success.

2.1.4 General Treatment Design Features for Alternatives B and C

- No spraying of any herbicide would occur when wind velocity exceeds 10 miles per hour, per Idaho State Department of Agriculture standards, and on sites without 80%-90% live plant and/or plant litter cover.

- Application methods would strictly follow label specifications. The proposed herbicides are BLM-approved, per the 2007 *Final Vegetation Treatments Using Herbicides on Bureau of Land Management Lands in 17 Western States Programmatic Environmental Impact Statement* (PEIS) (http://www.blm.gov/wo/st/en/prog/more/veg_eis.html).
- Standard Operating Procedures for Applying Herbicides would be strictly enforced. (Appendix 1).
- Application of Glyphosate (a post-emergent herbicide) would occur when native Sandberg bluegrass (*Poa secunda*) is dormant to reduce impact to remaining extant stands of this native species.
- An Archaeologist approved by the Shoshone Paiute tribe, would be on-site during drill seeding treatments to stop operations if yet undiscovered archaeological resources are located. NCA staff will contact the tribe when drill operations begin in case the tribe wants to send an on-site tribal representative to be present.
- A minimum-till drill will be used to reduce soil and biological crust displacement and accompanying erosion risk.
- All vehicles, tools, and material used during project implementation would be pressure-washed prior to transport to the project site, to avoid the spread of noxious weeds.
- All improvements required for project implementation would be limited to the least intensive method required to meet project objectives, such as using existing tracks/trails where feasible for fence construction access.

3.0 Affected Environment and Environmental Consequences

Environmental consequences will include **direct and indirect**, impacts of the Proposed Action and alternatives. The impacts are analyzed to determine if the effects of an action are significant, requiring further analysis in an environmental impact statement. The No Action alternative is the baseline against which other alternatives are compared.

A "**direct**" impact is caused by the Proposed Action and occurs at the same time or place. An "**indirect**" impact is caused by the Proposed Action, but occurs later in time or is further removed in distance, but is reasonably foreseeable.

Cumulative impacts are impacts which result from the incremental impact of the action when added to other past, present, and reasonably foreseeable future actions regardless of what agency (Federal or non-federal) or persons undertake such actions. Cumulative impacts can result from individually minor but collectively significant actions taking place over a period of time.

3.1 Soil Resources

3.1.1 Affected Environment – Soils and Watershed

Soils

The majority of the project area soils are representative of a Loamy 8”-12” and Shallow Loamy 8”-12” ecological sites (NRCS 2011). The predominantly loess soils, formed in alluvium and residuum derived from sedimentary materials and basalt, occur on nearly level to moderately sloping basalt plains and alluvial terraces in the Snake River Sediments and Volcanic Plateaus, Hills, and Plains regions. They have moderate to high erosion potential without vegetative cover.

Snake River Sediments: Soils occur on nearly level to very steep dissected sedimentary terraces, and were formed in alluvium and residuum derived from sedimentary materials and mixed volcanics. They are moderately deep to very deep and well drained to excessively drained. The soils have an aridic or aridic-bordering xeric soil moisture regime and a mesic soil temperature regime.

Volcanic Plateaus, Hills, and Plains: Soils occur on nearly level to hilly structural benches, tablelands, foothills, and mountains. The more hilly area soils formed in residuum and slope alluvium derived from welded ryholitic tuffs, while those on the structural benches and tablelands formed in alluvium and residuum derived from basalt and welded ryholitic tuff. They are shallow to moderately deep and well drained, and have a xeric or xeric-bordering aridic soil moisture regime and a mesic or frigid soil temperature regime.

Biological Soil Crusts

Biological soil crusts are an important area component, but have experienced increasing alteration and fragmentation from fire and drill-seeding impacts. They function as living mulch, retaining soil moisture and discouraging annual weed growth (USDI 2000). Crusts reduce wind and water erosion, fix atmospheric nitrogen, and contribute to soil organic matter (Eldridge and Greene 1994; Belnap and Gillette 1997, 1998; McKenna-Neumann et al.1996). They also protect interspatial surface areas from various forms of erosion. By occupying this area between larger plants, the crusts enhance soil stability and moisture retention and site fertility (by fixing atmospheric nitrogen and contributing organic matter). In addition, biological soil crusts release polysaccharides which, in combination with lichen and moss rhizines, entrap and bind soil particles together, increasing the size of soil aggregates, and making it difficult for wind or water to move (USDI 2000).

3.1.2 Environmental Consequences – Soils and Watershed

3.1.2.1 Alternative A

Direct impacts would consist of annual fluctuations in vegetation and litter cover which would affect expected rates of soil movement within the project area’s loamy and shallow loamy ecological sites. No additional short-term impacts, outside intermittent soil displacement and redistribution by livestock associated with the current permit would occur.

Indirect impacts would consist of continued decline in soil nutrient cycling and water infiltration, which would affect long-term soil productivity and development and improvement of biological soil crusts (USDI 2000).

3.1.2.2 Alternative B

Direct impacts would consist of short-term, local impacts to the soil surface through livestock use, soil core installation, UTV's, mower and minimum till-drill to treat or access invasive weed infestations within the treatment blocks. This equipment use could compact soil, create new trails, and provide new weed transport and colonization sites. However, this disturbance would be negligible due to the small size and already impacted nature of the area.

Imazapic is moderately persistent in soils and has not been found to move laterally with surface water. Most imazapic is lost through biodegradation. Soil adsorption increases with decreasing pH and increasing organic matter and clay content. Little is known concerning the effects of imazapic on soil organisms or processes (ENSR 2005).

In its risk assessment (ENSR 2005), Groundwater Loading Effects of Agricultural Management Systems (GLEAMS) modeling estimated the proportion of applied imazapic lost by runoff for clay, loam, and sand at rainfall rates ranging from 5-250 inches per year. Runoff would be negligible in relatively arid environments, as well as areas with sandy or loamy soils. In clay soils, which have the highest runoff potential, off-site loss could reach up to 3.5% of the applied amount in very high rainfall regions. The model showed that as rainfall rate increases, maximum soil concentrations are reduced because of imazapic soil losses through percolation or runoff. Modeling also showed that longer-term concentrations in soil vary substantially with rainfall rates, ranging from about 1 to 2 mg a.i./kg soil in very arid soils.

2,4-D is rapidly inactivated in moist soil but its fate is largely dependent on pH (Aly et al 1964). In alkaline soil, 2,4-D is rapidly converted to a form susceptible to photo-degradation and biodegradation, and that does not readily adsorb to soil particles. In acidic soil, 2,4-D resists degradation (Johnson et al. 1995)).

The half-life of 2,4-D averages 10 days in moist soils, but can be longer in cold or dry soils or where the microbial community is missing (Tu et al. 2001). Warm, moist soil conditions that enhance microbial populations facilitate 2,4-D degradation (Foster et al. 1973). Also, 2,4-D has dissipated more rapidly in soils previously treated with it, presumably because of an increase in degrading bacteria after the first application (Smith et al. 1994).

Studies have generally shown that at typical application rates, no effect from 2,4-D can be detected on soil macroorganisms (Eijsackers et al.1976). Furthermore, most studies of 2,4-D effects on microorganisms concluded that the quantity reaching the soil from typical applications would probably not have a serious negative effect on most soil microorganisms).

Glyphosate Glyphosate is highly adsorbed on most soils especially those with high organic content. The compound is so strongly attracted to the soil that little is expected to leach from the applied area. Microbes are primarily responsible for the breakdown of the product. The time it takes for half of the product to break down ranges from 1 to 174 days. Because glyphosate is so

tightly bound to the soil, little is transferred by rain or irrigation water. One estimate showed less than two percent of the applied chemical lost to runoff. There is little information, however, to suggest that glyphosate is harmful to soil microorganisms under field conditions; some studies suggest it may benefit some (SERA 2003a). Single or repeated applications of glyphosate, at the recommended field concentration, had little effect on microbial communities.

Indirect impacts within 3-5 years impacts would include a reduction in fuel and invasive weed biomass, providing longer-term soil protection and stabilization through seeded and extant grasses' establishment. Replacing invasive weeds with perennial grasses and native shrubs would provide better soil surface coverage, thus allowing these species to minimize soil erosion and also trap blowing soil particles (Sheley and Petroff 1999, Lacey 1989). Replacing an annual dominated site with deep-rooted perennial species would reduce overall, long-term soil loss from erosion.

The indirect fate and transport of herbicides in soil is a function of their interaction with the soil environment. Chemical, physical, and biological soil processes influence herbicide availability, phytotoxicity, and fate and transport (Anderson 1982). Herbicides dissipate from soils by transport with water or wind, through chemical or biological degradation processes, or by immobilization through adsorption onto soil surfaces[1].

Herbicides may indirectly affect soil, through plant removal, resulting in physical and biological soil changes. Loss of plant material and soil organic matter can increase the soil risk of wind and water erosion, if no residual plant litter or biological soil crust is present. Direct application of two glyphosate herbicides (Roundup® and Accord®) on moss-dominated biological soil crusts had no short-term negative impact on moss cover (Youtie et al. 1999). Cover decreased significantly in control plots, from litter buildup of invading, exotic annual grasses, while cover stayed the same or increased slightly in treated plots. There is little research information on the effects of repeated application or long-term effects of glyphosate and other herbicides on biological soil crusts (USDI 2000).

3.1.2.3 Alternative C

Under this alternative, the direct effects of Glyphosate would be similar to the direct and indirect effects of Alternative B.

The indirect effects on soil resources would be restricted to the affects out-lined for Glyphosate. By restricting herbicide treatments to one chemical type, weed treatment effectiveness would be reduced since not all target species exhibit the same germination and phenological stages that are most susceptible to a particular herbicide's control. Less efficient weed treatments would affect soil and watershed resources in the long-term, by allowing weed biomass to increase fuel loading and associated fire risk, as well as decreasing seeded and extant species' capacities to establish. Establishment of deep rooted plant species would provide long-term soil and watershed stability and ecological function (Monson et al. 2004).

[1] Adsorption. The process whereby ions and molecules are bonded to the surface of soil colloids due to the electrical attraction between themselves and the colloidal particles.

3.2 Upland Vegetation

3.2.1 Affected Environment – Vegetation Including Noxious and Invasive Species

Prior to European settlement, the NCA was dominated by three principal vegetation communities: Wyoming big sagebrush (*Artemisia tridentata* ssp. *wyomingensis*), winterfat (*Krascheninnikovia lanata)*, and four-wing saltbush (*Atriplex canescens*), each with a complex understory of perennial grasses and forbs. These communities were often found as complexes, e.g. Wyoming big sagebrush/winterfat. Biological crusts consisting of lichens, algae, and mosses were another important part of the understory, and still exist in more intact portions of the NCA. By the 1980s, these vegetation communities had become highly altered by fire and other disturbances.

Frequent wildfires and other disturbances have converted over seventy percent of the NCA landscape from native sagebrush habitat to a non-native annual dominated system. More than 59% of the NCA burned between 1980-2003, and ~32% has burned two or more times during that period. Only 37% of the NCA is still occupied by native shrublands leading to a loss of habitat for raptor prey base species. The proposed project area burned most recently in 1985, and was drill seeded and chained with generic rangeland seed mixes to provide site stabilization. However, these treatments can incur unwanted impacts, including removal of biological soil crusts, extant native bunchgrasses, and mixing of soil profiles, which alter biophysical and biological soil properties (USDI 2000).

The current vegetation composition consists of cheatgrass (*Bromus tectorum*) stands interspersed with annual mustards *(Brassica* spp.), Russian thistle (*Salsola tragus)* and sparse pockets of native Sandberg bluegrass (*Poa secunda*). In August 2011, the Big Foot Fire consumed part of the proposed project area (Figure 1). Prior to the fire, vegetation composition was similar to the other proposed project area blocks. No noxious weed populations were found, based on surveys completed by Idaho Army National Guard (IDARNG) biologists in the Orchard Training Area (OTA), on June 17, 2011 and during August 2011.

3.2.2 Environmental Consequences – Vegetation Including Noxious and Invasive Species

3.2.2.1 Alternative A

Direct effects would include no biomass removal of invasive species or Sandberg bluegrass in excess of what occurs during permitted livestock operations.

Indirect effects would include the continued suppression of remnant native species, like Sandberg bluegrass, from increases in extent and vigor. Longer term impacts would include continued dominance of shallow rooted annual invasives that affect site productivity and decrease plant community nutrient cycling (Chambers et al. 2000). Fuel loading would increase, as well, and further reduce site capacity and ecological function.

3.2.2.2 Alternative B

Direct effects under this alternative would include mowing and grazing to reduce overall biomass of invasive weeds and to potentially increase the effectiveness of herbicide applications, as well as acting alone to temporarily reduce fuel loads. Additional effects would be mowing and grazing of the current year's plant production from residual perennial Sandberg bluegrass stands. Herbicide effects from Glyphosate applications would consist of some bluegrass individuals experiencing temporary, reduced biomass production (Bekedam 2004).

Chemical treatments are designed to employ both post- and pre-emergent herbicides that target the different invasive weed life stages. The application of a spring Glyphosate (post-emergent) treatment would control the first green-up of weeds, with a follow-up of 2,4-D to control late spring and early summer ones, e.g. Russian thistle and tumble mustard. The application of Imazapic (pre-emergent) in fall would affect the fall and spring germination of cheatgrass seed. Weed resistance to herbicides would be minimized by using multiple herbicides with different modes of action in the same application, alternating herbicides each year or alternating herbicide use with other effective treatment forms.

The BLM risk assessment for Imazapic (USDI 2005) analyzed varying model scenarios such as AGDRIFT used to estimate off-site translocation due to spray drift, and CALPUFF used to predict transport and deposition of herbicides in wind-blown dust. Based on these models and the employment of label and Standard Operating procedures (Appendix 1) no risks to "non-target" plants were determined. Imazapic has been used to control cheat grass throughout Idaho (Vollmer and Vollmer 2008c, Morris et a. 2009, USDI 2009, US Air Force 2010,) as well as in other Western states (Davidson et al. 2007, McIver 2011,Owen et al. 2011). No off-site non-target vegetation impacts have been documented by these projects.

Indirect effects would include a reduction in invasive weed and fuel cover by employing a range of mechanical and chemical treatments with different modes of action and a wider temporal range. The use of three different herbicides, that match target weed phenological periods, would increase treatment effectiveness and, in the long-term, decrease fuel loads and increase seeded and extant plant species' capacity to establish.

3.2.3 Alternative C

Direct effects would be similar to Alternative A as to mechanical removal of biomass, but herbicide effects would include a risk reduction for Imazapic to affect spatially isolated Sandberg bluegrass seed germination sites.

Indirect effects would result in a use restriction for a wider range of herbicides/types available to control diverse weed species within their phenological range, and increase the chance of these invasive species becoming herbicide resistant. Using only Glyphosate would reduce plant communities' benefits by increasing the growth, seed production, and competitiveness of targeted weeds, thus suppressing the release of seeded and extant species from competitive pressures (e.g., water, nutrient, and available space).

3.2.4 Affected Environment (Wildlife)

The NCA was established to conserve, protect, and enhance the most densely known nesting population of raptors, and their supporting habitat, in North America. The Piute ground squirrel and black-tailed jack rabbit are the two most important prey species for migrant, wintering, and breeding raptors; ravens; and some mammalian predators and reptiles. The greatest population density of Piute ground squirrels and black-tailed jack rabbits are found in sagebrush grasslands. Piute ground squirrels can be abundant following years of above-average precipitation in many habitat types, including exotic grasslands. However, severe population declines have been observed in annual grass areas following below-normal precipitation years. Black-tailed jack rabbits are most abundant in areas where sagebrush grassland still occur and are limited where sagebrush has been removed by wildfires.

3.2.5 Environmental Consequences – (Wildlife)

3.2.5.1 Alternative A

No direct impacts to wildlife would occur.

Indirect impacts of positive ecosystem and habitat benefits as a result of vegetation management could be reduced under this alternative. There would be an expected continued decline in the recovery of native habitat after wildfire.

3.2.5.2 Alternative B

Direct impacts to non-sensitive species under typical application scenarios and herbicides evaluated by the BLM pose negligible chronic or acute toxicity hazards to wildlife, and most are rapidly eliminated from animal systems once ingested or absorbed (Tatum 2004; Wagner et al. 2004). Response by wildlife to herbicide induced habitat alteration is highly variable. However, this proposed project covers such a minimal area (59 acres) for herbicide use that potential toxicity effects would be minimal. Piute ground squirrels and black-tailed jack rabbits are important non-special status prey species which could occur within or adjacent to study sites. Ground disturbing activities like mowing and planting could cause black-tailed jack rabbits to move from the activity itself, only to return after human activities concluded. Piute ground squirrels would use nearby burrows to escape from any ground disturbing activities.

The only big game species likely to occur in the area would be pronghorn antelope that occur in small numbers in the NCA. Pronghorn antelope require areas to obtain food and water in the proposed project area which is currently limited. The effects for other non-sensitive species in the area (reptile, mammalian, and avian) would be expected to be the similar to black-tailed jack rabbits or Piute ground squirrels for herbicide and ground disturbance effects.

Indirect effects would include decreased invasive weed and fuel cover that protects small native habitat tracks within the plots and along the fencelines.

3.2.5.3 Alternative C

Impacts would be similar to Alternative B, but the efficacy of annual weed removal treatment effects on invasive weeds would be less by restricting herbicide use to only Glyphosate.

3.3 Special Status Species Animals and Plants

3.3.1 Affected Environment –Special Status Species Animals and Plants

Special status animal (SSA) (Appendix 2) and plant (SSP) are those species listed (endangered, threatened), proposed for listing, or candidates under the Endangered Species Act (ESA) or considered sensitive by BLM. Listed and proposed species may also have designated or proposed Critical Habitat as defined under ESA. The policy of the BLM is to conserve ESA listed, candidate, and proposed species and their habitats and to mitigate adverse impacts to sensitive species.
SSA species occupy a variety of habitats in the project area (Appendix 2). There are no known threatened, endangered, or candidate animals or their habitat within the proposed project area. Due to fragmented sagebrush and winter fat cover and lack of riparian habitat, the project area provides limited habitat for sagebrush-dependent species, including three bat species (Townsend big-eared bat, spotted bat, and fringed myotis), five special status bird species (prairie falcon, ferruginous hawk, loggerhead shrike, Brewer's sparrow, and sage sparrow), and three special status reptile and amphibian species (Mojave black-collared lizard, longnose snake, and western ground snake). Wildlife clearances were conducted by Orchard Training Area (OTA) Idaho Army National Guard (IDARNG) biologists on June 17, 2011 and during August 2011.

No occurrences, potential habitat, suitable habitat or proposed critical habitat of slickspot peppergrass (*Lepidium papilliferum*), a federally listed threatened species, exists in the proposed project area. No other BLM Special Status plant species are known in the project area based on surveys completed by OTA biologists on June 17, 2011 and during August 2011. No environmental consequences of the proposed action or other alternatives would occur to Special Status Plant species.

Executive Order 13186 expressly requires that Federal agencies evaluate the effects of proposed actions and in furtherance of the purposes of the Migratory Bird Treaty Act (16 U.S.C. 703-711), the Bald and Golden Eagle Protection Acts (16 U.S.C. 668-668d), and the Fish and Wildlife Coordination Act (16 U.S.C. 661-666c), on migratory birds (including eagles) pursuant to NEPA "or other established environmental review process;" restore and enhance the habitat of migratory birds, as practicable; identify where unintentional take reasonably attributable to agency actions is having, or is likely to have, a measurable negative effect on migratory bird populations; and, with respect to those actions so identified, the agency shall develop and use principles, standards, and practices that will lessen the amount of unintentional take, developing any such conservation efforts in cooperation with the Service. The golden eagle is one of the premiere raptor species within the NCA and is not considered by the BLM as a special status species. Golden eagles are considered for the proposed project as they fall under the requirements of executive order 13186. Resident and wintering golden eagles are known to forage over the proposed project area.

3.3.2 Environmental Consequences – Special Status Species Animals

3.3.2.1 Alternative A

No direct impacts to special status animal species by herbicide use or other management actions would occur.

Indirect impacts would be a reduction of the positive ecosystem and habitat benefits as a result of vegetation management and an anticipated further decline in the recovery of native habitat after wildfire.

3.3.2.2 Alternative B

Direct impacts would include the disturbance to both prey and non-prey species special status species (from mowing and planting) currently utilizing the area, and potential direct exposure of three different herbicides on wildlife. However, impacts would be short term and expected to be minimal due to the limited time human disturbance would occur, and the limited wildlife exposure to herbicides on 59 out of 363 acres for the project area.

Herbicide treatments have been used to improve the success of perennial grass seedings in grasslands dominated by invading annuals in California (Vallentine 1989). Positive long term impacts would occur with vegetation treatments that promote a mixed sagebrush grass forb community. Habitat in these plot communities is improved by removing invasive species, and promoting production of sagebrush, perennial grasses and forbs. Though these are small plots, treatments can improve habitat structure, complexity, and layering to the benefit of species that rely on a diversity of plant types and cover to meet their daily needs. Particularly Piute ground squirrels that can function within a relatively small expanse of habitat. Perennial grasses and forbs would provide higher quality food to assist with improving survivability of adults and increase reproductivity. Several studies have shown that densities of songbirds and small mammals are greater in mixed communities than in pure grassland stands (USDI BLM 1991a). Without treatment, the grassland stands in this case would likely be dominated, especially post fire, by invasive annuals.

Summary information on the herbicide exposure risk factor for wildlife for the three herbicides to be utilized under Alternative B come from the *Final Vegetation Treatments Using Herbicides on Bureau of Land Management Lands in 17 Western States Programmatic Environmental Impact Statement* (PEIS) (USDI 2007b). Imazapic does not present any risks to wildlife in modeled scenarios (similar to chlorsulfuron, dicamba, fluridone, metsulfuron methyl, and sulfometuron methyl). Risk quotients for terrestrial wildlife were all below the most conservative Level of concern (LOC) of 0.1, indicating that direct spray of imazapic is not likely to pose a risk to terrestrial animals. Glyphosate applications pose low to moderate risk to several terrestrial wildlife receptors under multiple exposure scenarios involving applications at the typical and maximum application rates. Direct spray of a small animal and an insect, both assuming 100% absorption, poses a low risk at the typical application rate and a moderate risk at the maximum application rate. 2,4-D poses a risk to some terresterial wildlife under direct spray as well as ingestion of contaminated food scenarios. Direct spray of 2,4-D at both the typical and maximum application rates poses moderate risk to insects and small mammals, assuming 100% absorption of the herbicide. Small mammals face low risk from direct spray if 1st order dermal absorption is assumed. In addition, mammals and large birds would be at risk from the consumption of vegetation contaminated by 2,4-D at the application site. Large mammals and large birds would be at moderate acute and chronic risk for ingestion scenarios involving both the typical and maximum application rates (large birds face high acute risk for ingestion scenarios involving the maximum application rate), and small mammals face low acute risk for

ingestion scenarios involving the typical and maximum application rates. However, the overall design of the project only calls for small area (59 acres) to be treated with herbicide.

Indirect effects would include a reduction of non-native plant species cover which reduces the suitability of some habitats to support special status wildlife species. For example, the northern Idaho ground squirrel feeds on native bunchgrasses to fulfill a large portion of its dietary needs (USFWS 2000). These commensurate decreases in invasive weed and fuel cover would reduce protection of some small native habitat tracks within the plots and along fencelines.

3.3.2.3 Alternative C

Direct impacts regarding disturbance to wildlife would be similar to Alternative B. Negative impacts to wildlife could be slightly lower than under the other herbicide-use alternatives, based on lack of exposure to 2,4-D. Treatment size though is small so exposure to 2,4-D in alternative B is minimized.

3.4 Air Quality

3.4.1 Affected Environment – Air Quality

The project area's air quality is generally good due to its remoteness and limited amount of development/activity taking place. Air pollution can result from various sources, including UTVs, windblown dust, and wildfire smoke. Pollution from these sources would result in localized, temporary increases in fugitive dust and particulates and are not expected to exceed air quality standards. The area has not been classified, by the Environmental Protection Agency, as a Federal non-attainment/maintenance area; therefore, Federal actions are not subject to conformity determinations under 40 CFR 93.

3.4.2 Environmental Consequences – Air Quality

3.4.2.1 Alternative A

Direct impacts would consist of normal emissions of particulate matter generated by various sources, including wild and prescribed fires, agricultural activities, industrial emissions, dust suspended by vehicle traffic and construction equipment, and secondary aerosols formed by reactions in the atmosphere.

Indirect impacts would consist of increased retention of fuel loads and increased fire frequency, with accompanying local decreases in air quality.

3.4.2.2 Alternative B

Direct impacts would produce localized, exhaust releases from mowing, drill seeding equipment and UTV's. Some airborne dust would also be generated during equipment operation. No significant adverse or cumulative impacts are anticipated from the Proposed Action.

No indirect impacts are anticipated due to the short (3-4 week) time period that the mowing treatments would take. No cumulative impacts to air quality would occur as a result of the proposed action.

3.4.2.3 Alternative C

Impacts under this alternative would be the same as Alternative B.

3.5 Water Quality

3.5.1 Affected Environment – Water Quality

In 1972, Congress passed Public Law 92-500, the Federal Water Pollution Control Act, more commonly called the Clean Water Act (CWA). The goal of this act was to "restore and maintain the chemical, physical, and biological integrity of the Nation's waters" (Water Pollution Control Federation 1987). Federal agencies are responsible for water quality on lands they manage. Water quality best management practices are those practices that are the most effective, practicable, and economic means of preventing or reducing the amount of pollution from non-point sources, which are defined as sources that cannot be pinpointed but that can be best controlled by proper soil, water, and land management practices.

There will be no direct, indirect or cumulative impacts of the proposed action because of the implementation of best management practices and because of the physical site features within the project area such as; soil type, level topography and the high amount of live plant and plant litter. These site characteristics would make the risk of soil inputs into the Snake River highly unlikely.

3.6 Cultural and Tribal Resources

3.6.1 Affected Environment –Cultural and Tribal Resources

Cultural Resource Management and Environmental Management crews of the IDARNG conducted Class III Cultural Resource Surveys over the proposed project on June 17, 2011 and during August 2011. No cultural or historic properties were located within the area of potential effect (APE). The survey report has been reviewed by the NCA Archaeologist and Section 106 compliance has been completed. There would be no direct, indirect or cumulative impacts to cultural and tribal resources as a result of the proposed action.

3.7 Livestock Grazing

3.7.1 Affected Environment – Livestock Grazing

Sheep and cattle grazing occurs annually in the fall/winter. The Sunnyside Winter Allotment (00826) is grazed from December-February. The current authorized Animal Unit Month (AUM) allocation is 11,280. The permittees primarily use the same pastures each year. Diamond (2009) identified livestock grazing as a tool which could be used to reduce hazardous fuels. About 1,500 fuel break acres within the NCA were identified that could potentially benefit from

livestock grazing. To date, only 200 acres have been grazed for this purpose. The program has been limited by the lack of operators either interested or able to adequately manage their livestock in the required manner.

3.7.2 Environmental Consequences – Livestock Grazing

3.7.2.1 Alternative A

Direct effects would include no reduction in AUMs for this Sunnyside Fall/Winter Allotment pasture. No risk of animal herbicide exposure would occur.

Indirect effects would include an increase in unpalatable invasive plant species, thus inhibiting the establishment and growth of native species which provide a more sustainable forage base.

3.7.2.2 Alternative B

Direct effects of would include a reduction of 21 AUMs for the study's duration. Herbicide use would pose a potential risk to livestock; however, it would be minimized by ensuring no livestock were present during application and timing with periods of rest. Risk quotients for Imazapic for terrestrial animals were all below the most conservative Level of Concern of 0.1, indicating that even direct spraying would be unlikely to pose a livestock risk (ENSR 2005H).

Large mammals immediately consuming vegetation sprayed with Glyphosate face moderate, acute risk for high application rates of Glyphosate, e.g. 8 quarts/acre/year. The proposed application rates are below this threshold and are similar to spot treatments which reduce the vegetative areas potentially consumed (USDI 2007b).

Indirect effects would provide a benefit, over the long–term, by controlling unpalatable invasive plant species and promoting the establishment and growth of native species to provide a more sustainable forage base. No cumulative impacts to livestock grazing would occur as a result of the proposed action.

Longer term impacts would include a reduction in invasive weed and fuel which would decrease fuel loads and increase seeded and extant plant species' capacity to establish and potentially spread outside the project area.

3.7.2.3 Alternative C

Direct and indirect effects of Alternative C would be the same as Alternative B, but address the use of Glyphosate only.

3.8 Cumulative Impacts

The cumulative effects analysis area for this proposal is limited to T. 02 S, R.01 Ein Sections 22, 23, 26, 27, and 28 (Boise 7.5' Quad.). The spatial scale for cumulative impacts is confined to the project area. The temporal scale for cumulative impacts to resources is 10 years; which includes the time during implementation which is expected to be a total of 3 months. Localized impacts to the soil surface through livestock use, soil core installation, UTV's, mower and minimum till-drill to treat or access invasive weed infestations within the treatment blocks would be temporary. Livestock grazing and herbicide would be temporally and spatially restricted as well.

For-instance, biomass removal by grazing and/or herbicide would still allow regrowth of perennial native species and the project design features would minimize the risk of unintentional long impact to these native species by herbicides or livestock use.

For wildlife species small scale science projects related to habitat improvement, cause minimal disturbance and impacts from vegetative treatment utilizing herbicides. The proposal allows research to determine ways to improve native habitat restoration for additional projects where mitigation to reduce disturbance or effects of herbicides to wildlife would be developed. Similarly, the risks to non-target plants associated with herbicide applications amount to indirect risks to these wildlife species through alteration of their habitat. The short term disturbance associated with the proposal is far outweighed by the valuable information that can be obtained to expand on future projects to restore large tracks of habitat within the NCA.

The effects of the proposed action would not extend outside the area because the proposed activities would be conducted at such a small scale that none of the effects described above extend beyond the immediate area described. Past disturbances on this site include fire and drill seeding between 1980-2003. Additionally, there are no other present or reasonably foreseeable future projects proposed in the cumulative effects analysis area; therefore, by definition, there are no cumulative actions or impacts. There is no need to analyze effects beyond those directly and indirectly associated with the proposed action and alternatives.

3.9 Consultation and Coordination

Three separate consultation meetings, including one field outing, were conducted with the Shoshone Piute Native American Tribes via the Wings and Roots Native American Campfire process. The dates of these meetings were on September 28, 2011, October 18 (field trip) and on December 6, 2011 where final comments were received and treatment design criteria developed to reduce potential impacts on yet undocumented cultural resources.

3.10 List of Preparers

Name	Title	Resource/Agency Represented
Anne Halford	Restoration Ecologist	Restoration/BLM
Lonnie Huter	Weed Specialist	Weeds/BLM
Jill Holderman	Wildlife Biologist	Wildlife; T&E Species/BLM
Mark Steiger	Botanist	Botany; T&E Species/BLM
Dean Shaw	Archaeologist	Cultural Resources/BLM
Patricia Roller	Manager	Morley Nelson Snake River Birds of Prey NCA/BLM
Matt McCoy	Assistant Four Rivers Field Office Manager	Four Rivers Field Office/BLM
Seth Flanigan	NEPA Specialist	Boise District Office/BLM
Barbara Albiston	Writer-Editor	Boise District Office/BLM

3.11 List of Agencies, Organizations, and Individuals Consulted

Name	Title	Agency Represented
Doug Shinneman	Fire Ecologist	Snake River Field Station/USGS
Robert Arkle	Landscape Ecologist	Snake River Field Station/USGS
David Pilliod	Research Ecologist	Snake River Field Station/USGS
Nancy Shaw	Research Botanist	Rocky Mountain Research Station/USDA
Mike Pellent	Great Basin Restoration Initiative Coordinator	Idaho State Office/BLM
Charlie Baun	Biologist	Idaho Army National Guard
Jake Fruhlinger	Archeaologist	Idaho Army National Guard

3.12 Public Participation

The Morley Nelson Snake River Birds of Prey NCA conducted internal scoping with an interdisciplinary team of Four Rivers Field Office and NCA specialists, USGS, Idaho Army National Guard, and Rocky Mountain Research and Experiment Station. External public scoping was conducted through electronic posting of the information package to the BLM Idaho State website and dissemination of hard copies to 16 individuals, non-governmental organizations and agencies between October 7, 20011 and December 7, 2011. Two comments, one email and one phone, call were received. They are summarized on page 4.

4.0 Literature Cited

Aly, O.M., Faust, S.S. 1964. Studies of the fate of 2,4-D and ester derivatives in natural surface waters. Agricultural food chemistry 12:541-546

Anderson, W.P. 1983. Weed Science; Principles. 2nd Edition. West Group. Eagan Minnesota

Belnap, J., and D.A. Gillette. 1997. Disturbance of biological soil crusts: impacts on potential wind erodibility of sandy desert soils in southeastern Utah, USA. Land Degradation and Development 8: 355-362.

Belnap, J., and D.A. Gillette. 1998. Vulnerability of desert soil surfaces to wind erosion: impacts of soil texture and disturbance. Journal of Arid Environments 39: 133-142.

Bekedam, Steven. 2004. Establishment tolerance of six native sagebrush steppe species to Imazapic herbicide-implications for restoration and recovery. Master's Thesis

Chambers, J.C., Miller, R.R., Tausch, R.J., B. Blank, S.E. Meyer, E.D. McArthur, B.A. Roundy, N.L. Shaw, S.C. Bunting, S.C. Walker, P. Fosse, and M. Pellant. 2000a. Changing fire regimes, increased fuel loads, and invasive species: Effects on sagebrush steppe and pinyon-juniper ecosystems. Joint Fire Sciences Program funded project.

Davison, Jason C., Smith, Edwin G. 2007**.** Imazapic provides 2-year control of weedy annuals in a seeded Great Basin fuelbreak Native Plants Journal - Volume 8, Number 2, Summer 2007, pp. 91-95

Di'Tomaso, J. M. 2000. Invasive weeds in rangelands: Species, impacts, and management. *Weed Science* 48:255–265.

Diamond, Joel M., "Effects of Targeted Grazing and Prescribed Burning on Fire Behavior and Community Dynamics of a Cheatgrass (Bromus tectorum) Dominated Landscape" (2009). All Graduate Theses and Dissertations. Paper 257. http://digitalcommons.usu.edu/etd/257

Eijasackers, H. Van Der Drift. 1976 Effects on the soil fauna. Pages 149-174 *In* Herbicides Physiology, Biochemisty, and Ecology. Academic Press. London, United Kingdom.

Eldridge, D.J., and R.S.B. Greene. 1994. Microbiotic soil crusts: a review of their roles in soil and ecological processes in the rangelands of Australia. Australian Journal of Soil Research 32: 389-415.

Eliason, S.A. and E.B. Allen. 2008. Exotic grass competition in suppressing native shrubland re-establishment. Restor. Ecol. 5(3):245-255.

ENSR. 2005. Annual emissions inventory for BLM treatment alternatives. Prepared for the U.S. Department of Interior Bureau of Land Management, Nevada State Office, Reno, Nevada

Foster, R.K., McKercher, R.B. 1973. Laboratory incubation studies of chlorophenoxyacetic acides in chernozemic soils. Soil Biology and Biochemistry 5:333-337.

Johnson, W.G., Lavy, T.L., Gbur, E.E. 1995. Persistence of Triclopyr and 2, 4-D in flooded and non-flooded soils. Journal of Environmental Quality 24:493-497.

Kochert, M.N. and K. Steenhof. 2003. Long-term nesting population and productivity changes of prairie falcons and golden eagles in the Snake River Birds of Prey NCA: 2002 report. USGS, Forest Rangeland Ecosystem Science Center, Snake River Field Station, Boise, ID. 20 pp.

_____. 2004a. Abundance and productivity of prairie falcons and golden eagles in the Snake River Birds of Prey National Conservation Area 2003 annual report. USGS, Forest and Rangeland Ecosystem Science Center, Snake River Field Station, Boise, ID.

_____. 2004b. Responses of prairie falcons and golden eagles to loss of shrub habitat in the Snake River National Conservation Area. Presentation at 2004 Annual Meeting of the Raptor Research Foundation, 13 Nov 2004, Bakersfield, CA.

_____. 2005. Nesting territory and productivity of golden eagles in the Snake River Birds of Prey National Conservation Area: 2004 annual report. USGS, Forest and Rangeland Ecosystem Science Center, Snake River Field Station, Boise, ID. 20 pp.

Kochert, M.N., K. Steenhof, C.L. McIntyre, and E.H. Craig. 2002. Golden eagle (*Aquila chrysaetos*). No. 684 *in* The birds of North America, A. Poole and F. Gill eds. The Academy of Natural Sciences, Philadelphia, PA and the American Ornithologists' Union, Washington DC

Lacey, J.R., Marlow, C.B., Lane, J.R., 1989. Influence of spotted knapweed (Centaurea maculosa) on surface runoff and sediment yield. Weed Technol. 3, 627–631.

Leger, Elizabeth A. 2008. The adaptive value of remnant native plants in invaded communities: An example from the Great Basin. Ecological Applications. Ecological Applications 18:1226–1235.

Malik, J., Bary, G., Kishore, G. 1989. A mini-review of the herbicide Glyphosate. BioFactors 2:17-25.

McKenna-Neuman, C., C.D. Maxwell, and J.W. Boulton. 1996. Wind transport of sand surfaces crusted with photoautotrophic microorganisms. Catena 27: 229-247.

Monson, S. B., R. Stevens, and N. L. Shaw. 2004. Restoring western ranges and wildlands. Volume 3. Fort Collins, CO: U.S. Department of Agriculture, Forest Service, Rocky Mountain Research Station Gen. Tech. Rep. RMRS-GTR-136-Vol-3. Pp. 699–866.

Nydigger, N. C. and G. W. Smith. 1986. Prey populations in relation to Artemisia vegetation types in southwestern Idaho. In *Proceedings—symposium on the biology of Artemisia and Chrysothamnus*, comp. E. D. McArthur and B. L. Welch, 152–156. Provo, UT: USDA, Forest Service. GTR-INT-200.

Marzluff, J. M., S. T. Knick, M. S. Vekasy, L. S. Schueck, and T. J. Zarriello. 1997b. Spatial use and habitat selection of golden eagles in southwestern Idaho. The Auk 114:673-687.

McIver, J.D. 2011. Regional experiment to evaluate effects of fire and fire surrogate treatments in the sagebrush biome. Joint Fire Science Porject # 05-S-08;. Final Report

Morris, C., Monaco, T.A., Rigby, C.W. 2009. Variable Impacts of Imazapic on Downy Brome (Bromus Tectorum) and Seeded Species in Two Rangeland Communities. Journal of Invasive Plant Science and Management 2:110-119.

Olson, B. E. 1999. Impacts of noxious weeds on ecologic and economic systems. In *Biology and management of noxious rangeland weeds*, eds. R. L. Sheley and J. K. Petroff, 4–18. Corvallis, OR: Oregon State University Press.

Owen, Suzanne M., Hull Carolyn S., Gehring, Catherine A. Gehring. 2011. Rehabilitating Downy Brome (*Bromus tectorum*)–Invaded Shrublands Using Imazapic and Seeding with Native Shrubs Source: Invasive Plant Science and Management, 4(2):223-233. 2011. Published By: Weed Science Society of America DOI: 10.1614/IPSM-D-10-00054.1

Pellant, M., Shaver, P., Pyke, D.A., Herrick, J.E., 2005, Interpreting Indicators of Rangeland Health Version 4: Technical Reference 1734-6, Denver, Colorado, Bureau of Land Management, National Science and Technology Center, 122 p.

Perryman, B.L., R.E. Wilson, W.I. Morrill. 2003. Viewpoint: Eastern Nevada landscape coalition position. Rangelands 25:30-34.

Rueppel, M.L., Brightwell, B.B., Schaefer, J., Marvel, J.T. 1977. Metabolism and degradation of Glyphosate in soil and water. Journal of Agricultural and Food Chemistry 25: 517-528.

Sheley, Roger G., Petroff, Janet K. G. 1999. Review of Biology and Management of Noxious Great Plains Research: A Journal of Natural and Social Sciences Great Plains Studies, Center for 10-1-1999.

Smith, A.E., Aubin, A.J.1994. Loss of enhanced biodegradation of 2,4-D and MCPA in a field soil following cessation of repeated herbicide applications. Bulletin of Environmental Contaminant Toxicology 53.

Suring, L.H.; Wisdom, M.J.; Tausch, R.J. [and others]. 2005. Modeling threats to sagebrush and other shrubland communities. In: Wisdom, M.J.; Rowland, M.M.; Suring, L.H., eds. Habitat threats in the sagebrush ecosystem: methods of regional assessment and applications in the Great Basin. Lawrence, KS: Alliance Communications Group: 114-149 [Chapter 4].

Syracuse Environmental Research Associates, Inc. (SERA). 1997. Glyphosate – human health and ecological risk assessment final report. SERA TR 02-43-09-04a. Prepared for the U.S. Department of Agriculture Forest Service, Arlington, Virginia, Fayetteville New York.

Taum, V.L. 2004. Toxicity, transport and fate of forest herbicides. Wildlife Society Bulletin 32:1042-1048.

Tu, M., Hurd, C, Randall 2001. Weed control methods handbook: tools and techniques for use in natural areas. Wildland Invasive Species Program. The Nature Consevancy. http://tncweeds.ucdavis.edu/handbook.html

Vallentine, J. F. 1989. Range Development and Improvements. 3rd edAcademic Press. New York

Wagner, R.G., Newton, M, Cole, E.C., Miller, J.H., Shiver, B.D. 2004. The role of herbicides for enhancing forest productivity and conserving land for biodiversity in North America. Wildlife Society Bulletin 32:1028-1042.

Western Regional Climate Center, 1973. Western U.S. Precipitation Frequency Maps. Available: http://www.wrcc.dri.edu/pcpnfreq.html. Accessed: January 25, 2011

Whisenant, S.G. 1990. Changing fire frequencies on Idaho's Snake River Plains: ecological and management implications. In: McArthur, E.D., E.M. Romney, S.D. Smith, and P.T. Tueller, eds. Proceedings – Symposium on Cheatgrass Invasion, Shrub Die-off, and Other Aspects of Shrub Biology and Management. General Technical Report INT-276. USDA Forest Service, Intermountain Research Station, Ogden, UT. p. 4-10.

Yensen, Eric; Quinney, Dana L.; Johnson, Kathrine; [and others]. 1992. Fire, vegetation changes, and population fluctuations of Townsend's ground squirrels. The American Midland Naturalist. 128(2): 299-312. [19682]

Youtie, B., J. Ponzetti, and D. Salzer. 1999. Fire and herbicides for exotic annual grass control: effects on native plants and microbiotic soil organisms. In: Eldridge, D., and D. Freudenberger, eds. Proceedings of the VI International Rangeland Congress, Aitkenvale, Queensland, Australia. Pages 590-591.

U.S. Department of Agriculture. Soil Survey Staff, Natural Resources Conservation Service, Soil Survey Geographic (SSURGO) Database for Soil survey of Elmore County Area, Idaho, Parts of Elmore, Owyhee and Ada Counties, Idaho. Available online at http://soildatamart.nrcs.usda.gov. Accessed September 10, 2001.

United States Department of the Interior, Bureau of Land Management (USDI BLM). 1989. Fencing BLM Manual Handbook H-1741-1. BLM, Washington, D.C. 45 p.

_____. 2001 Biological soil crust: Ecology and management. Technical Reference No. 1730-2. BLM/ID/ST-01/001+1730. 119 pp.

_____. 2005. Contract No. NAD010156 ENSR Document Number 09090-020-650. Ecological Risk Assessment – Imazapic. Final Report. ENSR International. 138pp.

_____. 2007a. Healthy lands initative. Departmental highlights. DH-37.

_____. 2007b. Vegetation Treatments Using Herbicides on Bureau of Land Management Lands in 17 Western States Programmatic Environmental Impact Statement. Volume 1.

_____. 2008a. "National Fire Plan" website. Available online at http://www.forestsandrangelands.gov/NFP/index.shtml [last accessed January 23, 2012.

_____. 2008b. Snake River Birds of Prey Resource Management Plan (RMP). Record of Decision 148 pp.

_____. 2008c. Vollmer, J.L. and J.G Vollmer. 2008. Controlling Cheatgrass in Winter Range to Restore Habitat and Endemic Fire. In: Kitchen, Stanley G.; Pendleton, Rosemary L.; Monaco, Thomas A.; Vernon, Jason, comps. 2008. Proceedings—Shrublands under fire: disturbance and recovery in a changing world; 2006 June 6–8; Cedar City, UT. Proc. RMRS-P-52. Fort Collins, CO: U.S. Department of Agriculture, Forest Service, Rocky Mountain Research Station.

_____. 2009. Environmental Assessment ID-330-2008-EA-30.Challis-Salmon integrated weed control program environmental assessment.90 pp.

5.0 List of Figures, Tables and Appendices

Figure 1. Proposed Project Area and Location of Treatment Blocks, Morley Nelson Snake River Birds of Prey National Conservation Area, Ada County, Idaho……9

Figure 2. Treatment Block Design and Dimensions……...10

Figure 3. Big Foot Burn (F9BN) and Associated Fourth Block Design……11

Figure 4. Example of Standard Rotomower……..12

Figure 5. Example of Till Depth of a Minimum Till Drill……14

Figure 6. Example of Hand-Held Auger……14

Table 1. Treatment Types Proposed for Experimental Plots in the Morley Nelson Snake River Birds of Prey NCA, Ada County, Idaho……10

Table 2. Range of Herbicide Types and Active Ingredients Amounts……..12

Table 3. Sample Species Used for Drill Seeding Treatment (Seeding Rates and Amounts…..13 Dependent Upon Species Availability)

Appendix 1. Standard Operating Procedures for Applying Pesticides……....35

Appendix 2. Special Status Wildlife Species……..36

TABLE 2-8 (Cont.)
Standard Operating Procedures for Applying Pesticides

Resource Element	Standard Operating Procedure
Pollinators	• Complete vegetation treatments seasonally before pollinator foraging plants bloom. • Time vegetation treatments to take place when foraging pollinators are least active both seasonally and daily. • Design vegetation treatment projects so that nectar and pollen sources for important pollinators and resources are treated in patches rather than in one single treatment. • Minimize herbicide application rates. Use typical rather than maximum rates where there are important pollinator resources. • Maintain herbicide free buffer zones around patches of important pollinator nectar and pollen sources. • Maintain herbicide free buffer zones around patches of important pollinator nesting habitat and hibernacula. • Make special note of pollinators that have single host plant species, and minimize herbicide spraying on those plants (if invasive species) and in their habitats.
Fish and Other Aquatic Organisms See manuals 6500 (*Wildlife and Fisheries Management*) and 6780 (*Habitat Management Plans*)	• Use appropriate buffer zones based on label and risk assessment guidance. • Minimize treatments near fish-bearing water bodies during periods when fish are in life stages most sensitive to the herbicide(s) used, and use spot rather than broadcast or aerial treatments. • Use appropriate application equipment/method near water bodies if the potential for off-site drift exists. • For treatment of aquatic vegetation, 1) treat only that portion of the aquatic system necessary to achieve acceptable vegetation management; 2) use the appropriate application method to minimize the potential for injury to desirable vegetation and aquatic organisms; and 3) follow water use restrictions presented on the herbicide label.
Wildlife See manuals 6500 (*Wildlife and Fisheries Management*) and 6780 (*Habitat Management Plans*)	• Use herbicides of low toxicity to wildlife, where feasible. • Use spot applications or low-boom broadcast operations where possible to limit the probability of contaminating non-target food and water sources, especially non-target vegetation over areas larger than the treatment area. • Use timing restrictions (e.g., do not treat during critical wildlife breeding or staging periods) to minimize impacts to wildlife. • Avoid using glyphosate formulations that include R-11 in the future, and either avoid using any formulations with POEA, or seek to use the formulation with the lowest amount of POEA available, to reduce risks to amphibians.
Threatened, Endangered, and Sensitive Species See Manual 6840 (*Special Status Species*)	• Survey for special status species before treating an area. Consider effects to special status species when designing herbicide treatment programs. • Use a selective herbicide and a wick or backpack sprayer to minimize risks to special status plants. • Avoid treating vegetation during time-sensitive periods (e.g., nesting and migration, sensitive life stages) for special status species in area to be treated.
Livestock See Handbook H-4120-1 (*Grazing Management*)	• Whenever possible and whenever needed, schedule treatments when livestock are not present in the treatment area. Design treatments to take advantage of normal livestock grazing rest periods, when possible. • As directed by the herbicide label, remove livestock from treatment sites prior to herbicide application, where applicable. • Use herbicides of low toxicity to livestock, where feasible. • Take into account the different types of application equipment and methods, where possible, to reduce the probability of contamination of non-target food and water sources. • Avoid use of diquat in riparian pasture while pasture is being used by livestock. • Notify permittees of the project to improve coordination and avoid potential conflicts and safety concerns during implementation of the treatment. • Notify permittees of livestock grazing, feeding, or slaughter restrictions, if necessary. • Provide alternative forage sites for livestock, if possible.

TABLE 2-8 (Cont.)
Standard Operating Procedures for Applying Pesticides

Resource Element	Standard Operating Procedure
Wild Horses and Burros	• Minimize using herbicides in areas grazed by wild horses and burros. • Use herbicides of low toxicity to wild horses and burros, where feasible. • Remove wild horses and burros from identified treatment areas prior to herbicide application, in accordance with label directions for livestock. • Take into account the different types of application equipment and methods, where possible, to reduce the probability of contaminating non-target food and water sources.
Cultural Resources and Paleontological Resources See handbooks H-8120-1 (*Guidelines for Conducting Tribal Consultation*) and H-8270-1 (*General Procedural Guidance for Paleontological Resource Management*), and manuals 8100 (*The Foundations for ManagingCultural Resources*), 8120 (*Tribal Consultation Under Cultural Resource Authorities*), and 8270 (*Paleontological Resource Management*), See also: *Programmatic Agreement among the Bureau of Land Management, the Advisory Council on Historic Preservation, and the National Conference of State Historic Preservation Officers Regarding the Manner in Which BLM Will Meet Its Responsibilities Under the National Historic Preservation Act.*	• Follow standard procedures for compliance with Section 106 of the National Historic Preservation Act as implemented through the *Programmatic Agreement among the Bureau of Land Management, the Advisory Council on Historic Preservation, and the National Conference of State Historic Preservation Officers Regarding the Manner in Which BLM Will Meet Its Responsibilities Under the National Historic Preservation Act* and state protocols or 36 CFR Part 800, including necessary consultations with State Historic Preservation Officers and interested tribes. • Follow BLM Handbook H-8270-1 (*General Procedural Guidance for Paleontological Resource Management*) to determine known Condition I and Condition 2 paleontological areas, or collect information through inventory to establish Condition 1 and Condition 2 areas, determine resource types at risk from the proposed treatment, and develop appropriate measures to minimize or mitigate adverse impacts. • Consult with tribes to locate any areas of vegetation that are of significance to the tribe and that might be affected by herbicide treatments. • Work with tribes to minimize impacts to these resources. • Follow guidance under Human Health and Safety in areas that may be visited by Native peoples after treatments.
Visual Resources See handbooks H-8410-1 (*Visual Resource Inventory*) and H-8431-1 (*Visual Resource Contrast Rating*), and manual 8400 (*Visual Resource Management*)	• Minimize the use of broadcast foliar applications in sensitive watersheds to avoid creating large areas of browned vegetation. • Consider the surrounding land use before assigning aerial spraying as an application method. • Minimize off-site drift and mobility of herbicides (e.g., do not treat when winds exceed 10 mph; minimize treatment in areas where herbicide runoff is likely; establish appropriate buffer widths between treatment areas and residences) to contain visual changes to the intended treatment area. • If the area is a Class I or II visual resource, ensure that the change to the characteristic landscape is low and does not attract attention (Class I), or if seen, does not attract the attention of the casual viewer (Class II). • Lessen visual impacts by: 1) designing projects to blend in with topographic forms; 2) leaving some low-growing trees or planting some low-growing tree seedlings adjacent to the treatment area to screen short-term effects; and 3) revegetating the site following treatment. • When restoring treated areas, design activities to repeat the form, line, color, and texture of the natural landscape character conditions to meet established Visual Resource Management (VRM) objectives.

TABLE 2-8 (Cont.)
Standard Operating Procedures for Applying Pesticides

Resource Element	Standard Operating Procedure
Wilderness and Other Special Areas See handbooks H-8550-1 (*Management of Wilderness Study Areas (WSAs)*), and H-8560-1 (*Management of Designated Wilderness Study Areas*), and Manual 8351 (*Wild and Scenic Rivers*)	• Encourage backcountry pack and saddle stock users to feed their livestock only weed-free feed for several days before entering a wilderness area. • Encourage stock users to tie and/or hold stock in such a way as to minimize soil disturbance and loss of native vegetation. • Revegetate disturbed sites with native species if there is no reasonable expectation of natural regeneration. • Provide educational materials at trailheads and other wilderness entry points to educate the public on the need to prevent the spread of weeds. • Use the "minimum tool" to treat noxious and invasive vegetation, relying primarily on use of ground-based tools, including backpack pumps, hand sprayers, and pumps mounted on pack and saddle stock. • Use chemicals only when they are the minimum method necessary to control weeds that are spreading within the wilderness or threaten lands outside the wilderness. • Give preference to herbicides that have the least impact on non-target species and the wilderness environment. • Implement herbicide treatments during periods of low human use, where feasible. • Address wilderness and special areas in management plans. • Maintain adequate buffers for Wild and Scenic Rivers (¼ mile on either side of river, ½ mile in Alaska).
Recreation See Handbook H-1601-1 (*Land Use Planning Handbook, Appendix C*)	• Schedule treatments to avoid peak recreational use times, while taking into account the optimum management period for the targeted species. • Notify the public of treatment methods, hazards, times, and nearby alternative recreation areas. • Adhere to entry restrictions identified on the herbicide label for public and worker access. • Post signs noting exclusion areas and the duration of exclusion, if necessary. • Use herbicides during periods of low human use, where feasible.
Social and Economic Values	• Consider surrounding land use before selecting aerial spraying as a method, and avoid aerial spraying near agricultural or densely-populated areas. • Post treated areas and specify reentry or rest times, if appropriate. • Notify grazing permittees of livestock feeding restrictions in treated areas, if necessary, as per label instructions. • Notify the public of the project to improve coordination and avoid potential conflicts and safety concerns during implementation of the treatment. • Control public access until potential treatment hazards no longer exist, per label instructions. • Observe restricted entry intervals specified by the herbicide label. • Notify local emergency personnel of proposed treatments. • Use spot applications or low-boom broadcast applications where possible to limit the probability of contaminating non-target food and water sources, especially vegetation over areas larger than the treatment area. • Consult with Native American tribes and Alaska Native groups to locate any areas of vegetation that are of significance to the tribe and that might be affected by herbicide treatments. • To the degree possible within the law, hire local contractors and workers to assist with herbicide application projects and purchase materials and supplies, including chemicals, for herbicide treatment projects through local suppliers. • To minimize fears based on lack of information, provide public educational information on the need for vegetation treatments and the use of herbicides in an Integrated Pest Management program for projects proposing local use of herbicides.

TABLE 2-8 (Cont.)
Standard Operating Procedures for Applying Pesticides

Resource Element	Standard Operating Procedure
Rights-of-way	• Coordinate vegetation management activities where joint or multiple use of a ROW exists. • Notify other public land users within or adjacent to the ROW proposed for treatment. • Use only herbicides that are approved for use in ROW areas.
Human Health and Safety	• Establish a buffer between treatment areas and human residences based on guidance given in the HHRA, with a minimum buffer of ¼ mile for aerial applications and 100 feet for ground applications, unless a written waiver is granted. • Use protective equipment as directed by the herbicide label. • Post treated areas with appropriate signs at common public access areas. • Observe restricted entry intervals specified by the herbicide label. • Provide public notification in newspapers or other media where the potential exists for public exposure. • Have a copy of MSDSs at work site. • Notify local emergency personnel of proposed treatments. • Contain and clean up spills and request help as needed. • Secure containers during transport. • Follow label directions for use and storage. • Dispose of unwanted herbicides promptly and correctly.

The BLM meets its responsibilities for consultation and government-to-government relationships with Native American tribes by consulting with appropriate tribal representatives prior to taking actions that affect tribal interests. The BLM's tribal consultation policies are detailed in BLM Manual 8120 (*Tribal Consultation Under Cultural Resource Authorities)* and Handbook H-8120-1 (*Guidelines for Conducting Tribal Consultation).* The BLM consulted with Native American tribes and Alaska Native groups during development of this PEIS. Information gathered on important tribal resources and potential impacts to these resources from herbicide treatments is presented in the analysis of impacts.

When conducting vegetation treatments, field office personnel consult with relevant parties (including tribes, native groups, and SHPOs), assess the potential of the proposed treatment to affect cultural and subsistence resources, and devise inventory and protection strategies suitable to the types of resources present and the potential impacts to them.

Herbicide treatments, for example, are unlikely to affect buried cultural resources, but might have a negative effect on traditional cultural properties comprised of plant foods or materials significant to local tribes and native groups. These treatments require inventory and protection strategies that reflect the different potential of each treatment to affect various types of cultural resources.

Impacts to significant cultural resources are avoided through project redesign or are mitigated through data recovery, recordation, monitoring, or other appropriate measures. When cultural resources are discovered during vegetation treatment, appropriate actions are taken to protect these resources.

Monitoring

Monitoring ensures that vegetation management is an adaptive process that continually builds upon past successes and learns from past mistakes. The regulations of 43 CFR 1610.4-9 require that land use plans establish intervals and standards for monitoring and evaluating of land management actions. During preparation of implementation plans, treatment objectives, standards, and guidelines are stated in measurable terms, where feasible, so that treatment outcomes can be measured, evaluated, and used to guide future treatment actions. This approach ensures that vegetation treatment processes are effective, adaptive, and based on prior experience.

The diversity of plant communities on BLM lands calls for a diversity of monitoring approaches. Monitoring strategies may vary in time and space depending on the

Appendix 2: Special Status Species
Some special status species do not occur within the proposed project area due to lack of potential habitat or current restriction to their range. Only those species that could occur within the area are designated by an X in the habitat present box

Idaho Regional/State Imperiled Wildlife Species (BLM Lower Snake River District, Four Rivers Field Office) and Idaho Listed Wildlife Species of Conservation Concern (IDFG)

Common Name (*Species*)	Status BLM/IDFG	Habitat Present	May Adversely Affect	Not Likely to Adversely Affect	Comments
Gray wolf *(Canus lupus)*	Type 1/S3			X	No known pack activity
Yellow-billed cuckoo *(Coccyzuz americanus)*	Type 1/S2			X	No riparian
Northern Idaho ground squirrel *(Urocitellus brunneus endemicus)*	Type 1/S3			X	Outside species range
Canada Lynx *(Lynx canadensis)*	Type 1/S3			X	No habitat
Snake River (*Physa Snail (Pyhsa natricina*)	Type 1/S3			X	No riparian or rivers
Greater Sage-grouse *(Centrocercus urophasianus*	Type 1/S3			X	Incidental wintering occurrence only north of freeway within the NCA
Bald eagle *(Haliaeetus leucocephalus)*	Type 2/S3			X	Winter migrant
Southern Idaho ground squirrel (*Urocitellus brunneus endemicus*)	Type 2/S3			X	Outside species range
Pygmy rabbit *(Brachylagus idahoensis)*	Type 2/S2			X	No known sitings since the 1980's
Spotted bat *(Euderma maculatum)*	Type 3/S3	X		X	

Common Name (*Species*)	Status BLM/IDFG	Habitat Present	May Adversely Affect	Not Likely to Adversely Affect	Comments
Trumpeter swan *(Cygnus buccinator)*	Type 3/S1			X	Incidental occurrence along the Snake River
Peregrine falcon *(Falco peregrines)*	Type 3/S2	X		X	Occasional winter migrant
Northern goshawk *(Accipiter gentiles)*	Type 3	X		X	Occasional winter migrant
Prairie falcon (*Falco mexicanus)*	Type 3	X		X	
Ferruginous hawk *(Buteo regalis)*	Type 3/S3	X		X	
Calliope hummingbird *(Stellula calliope)*	Type 3			X	No riparian habitat
Willow flycatcher *(Empidonax traillii)*	Type 3			X	No riparian habitat
Olive-sided flycatcher *(Contopus cooperi)*	Type 3			X	No riparian habitat
Loggerhead shrike *(Lanius ludovicianus)*	Type 3	X		X	
Brewer's sparrow *(Spizella breweri)*	Type 3/S3	X		X	
Sage sparrow *(Amphispiza belli)*	Type 3	X		X	
Longnose snake *(Rhinocheilus lecontei)*	Type 3/S2	X		X	
Mojave black-collared lizard *(Crotaphytus bicinctores)*	Type 3	X		X	
Ground snake *(Sonora semiannulata)*	Type 3/S2	X		X	
Common garter snake *(Thamnophis sirtalis)*	Type 3			X	No riparian habitat
Black-throated sparrow *(Amphispiza bilineata)*	Type 4			X	

Common Name (*Species*)	Status BLM/IDFG	Habitat Present	May Adversely Affect	Not Likely to Adversely Affect	Comments
Yuma myotis *(Myotis yumanensis)*	Type 5	X		X	
Canyon bat *(Parastrellus Hesperus)*	Type 5	X		X	
Western small-footed myotis *(Myotis ciliolabrum)*	Type 5	X		X	
Swainson's hawk *(Buteo swainsoni)*	Type 5/S3	X		X	Summer inhabitant
Long-billed curlew *(Numenius americanus)*	Type 5/S2	X		X	
Short-eared owl *(Asio flammeus)*	Type 5/S4	X		X	
Burrowing owl *(Speotyto cunicularia)*	Type 5/S2	X		X	
Sage thrasher *(Oreoscoptes montanus)*	Type 5	X		X	
Grasshopper sparrow *(Ammodramus savannarum)*	Type 5	X			
Brewer's blackbird *(Euphagus* cyanocephalus)	Type 5	X		X	No riparian or agriculture fields nearby
Cassin's finch *(Carpodacus cassinii)*	Type 5			X	
Night snake *(Hypsiglena torquata)*	Type 5	X		X	

Status Definitions

Type 1: Federally listed, proposed and candidate species.
Type 2: Range wide/Globally imperiled: species that are experiencing significant declines throughout their range with a high likelihood of being listed in the foreseeable future due to their rarity and/or significant endangerment factors. This includes species ranked by the Nature-Serve heritage program network with a Global rank of G1–G3 or T1–T3 or recent data indicate that the species is at significant range wide risk and this is not currently reflected by heritage program global ranks.

Type 3: Regional/ State imperiled: species that are experiencing significant declines in population or habitat and are in danger of regional or local extinctions in Idaho in the foreseeable future if factors contributing to their decline continues. This includes Idaho BLM sensitive species that (a) are not in Type 2, (b) have an S1 or S2 State rank (exception being a peripheral or disjunct species), or (c) score high (18 or greater) using the Criteria for Evaluating Animals for Sensitive Species Status or (d) other regional/national status evaluations (e.g., Partners in Flight scores) indicate significant declines.
Type 4: Peripheral: species generally rare in Idaho with the majority of their breeding range largely outside the state (Idaho Conservation Data Center 1994). This includes sensitive species that have an S1 or S2 state ranking, but are peripheral species to Idaho.
Type 5: these species are not considered BLM sensitive species and associated sensitive species policy guidance does not apply. Watch list species include species that may be added to the sensitive species list depending on new information concerning threats, species' biology or statewide trends. The Watch List includes species with insufficient data on population or habitat trends or the threats are poorly understood. However, there are indications that these species may warrant special status species designation and appropriate inventory or research efforts should be a management priority.